SUPERSTRUCTURE

(SUP)

SUPERSTRUCTURE

BRIDGE DECK

(SUP-BD)

SUPERSTRUCTURE

BRIDGE DECK - DETAILS

(SUP-BD(DT))

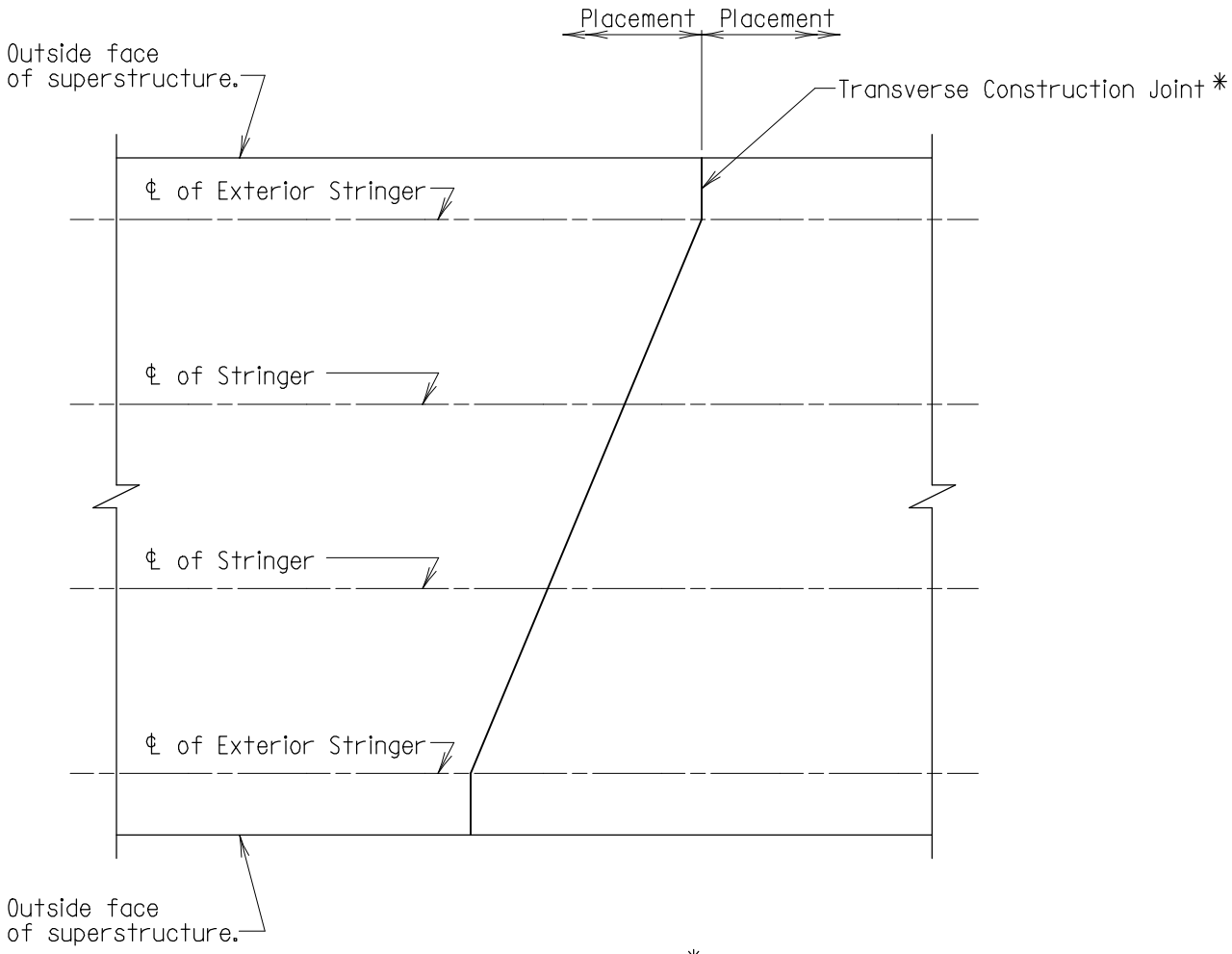

PLAN

Scale: None

* Transverse construction joints to be placed parallel to center line bearing for piers and abutments. If substructure units are not parallel then transverse construction joints shall be parallel to the closest substructure unit center line of bearing.

Transverse construction joints to be perpendicular to the outside face of superstructure for the portion of the deck outside of the exterior stringer.

Note:
For detail of construction joint see Standard No. SUP-BD(DT)-102.

APPROVAL		
R.S. Freedman DIRECTOR OFFICE OF STRUCTURES DATE: 4/12/78		
REVISIONS		
SHA	FHWA	
12-15-80	12-15-80	
9-13-94		
FHWA APPROVAL DATE: 10-17-78		

STATE OF MARYLAND
DEPARTMENT OF TRANSPORTATION
STATE HIGHWAY ADMINISTRATION
OFFICE OF STRUCTURES

LAYOUT OF TRANSVERSE
JOINT FOR SKEWED BRIDGE DECK

STANDARD NO. SUP-BD(DT)-101 SHEET 1 OF 1

SUPER-BRIDGE DECK

OLD NO. BR-SS(6.08)-78-69

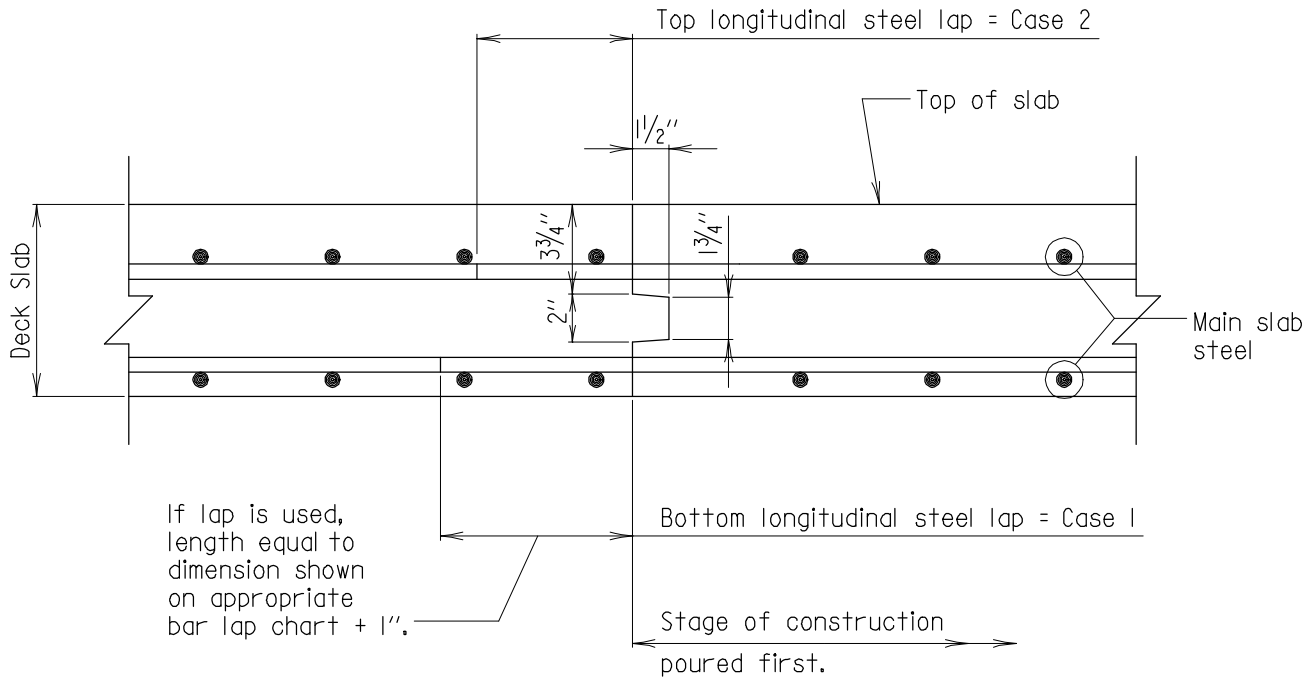

SECTION

Scale: 1½" = 1'-0"

Notes:

1. Reinforcing steel to be continuous thru joint.
2. Entire face of construction joint shall be coated with an approved epoxy bonding compound.
3. All dimensions shown are actual dimensions.
4. See lap charts for length of splices.

APPROVAL	
E.S. Freedman DIRECTOR OFFICE OF STRUCTURES DATE: 1/6/78	
REVISIONS	
SHA	FHWA
12-12-83	2-23-84
7-5-84	11-8-84
12-2-87	6-8-90
3-20-95	

FHWA APPROVAL
DATE: 1-31-78

STATE OF MARYLAND
DEPARTMENT OF TRANSPORTATION
STATE HIGHWAY ADMINISTRATION
OFFICE OF STRUCTURES

BRIDGE DECK SLAB DETAIL AT TRANSVERSE CONSTRUCTION JOINT

STANDARD NO. SUP-BD(DT)-102 SHEET 1 OF 1

SUPER - BRIDGE DECK

OLD NO. BR-SS(6.07)-77-68

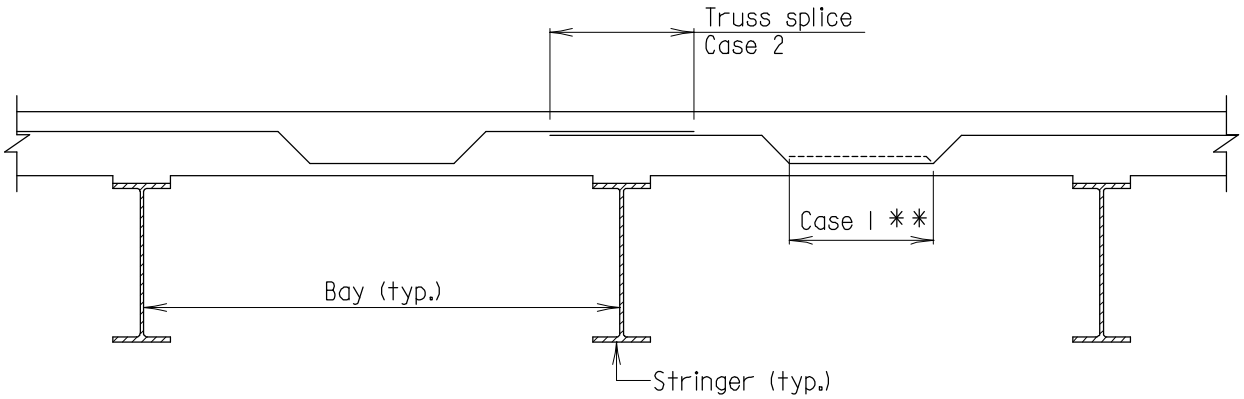

** This splice location can only be used if truss bottom leg dimension is greater than or equal to lap length.

No more than one splice may occur within every 3rd stringer or 3rd bay.

All bars must splice in the same plane (all in top of slab or all in bottom of slab).

SECTION

OPTIONAL TRANSVERSE TRUSS BAR SPLICE

Scale: None

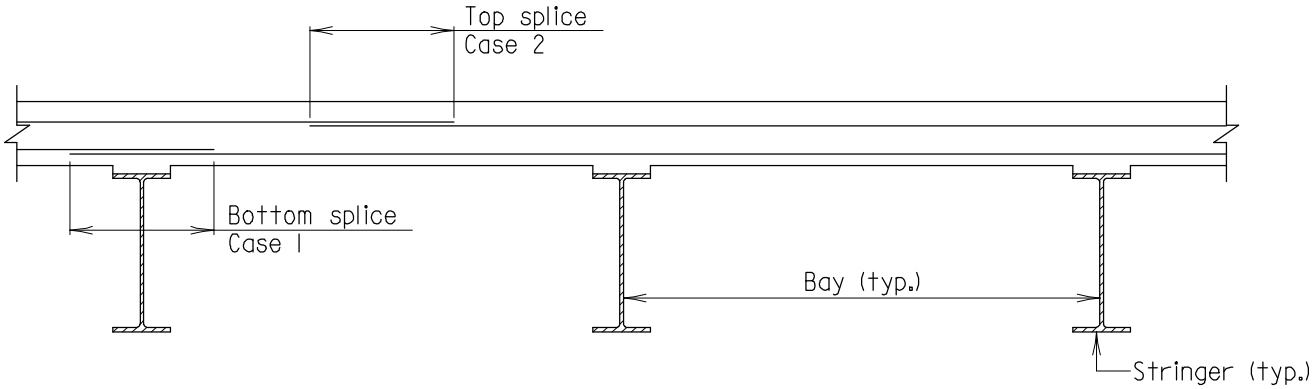

Optional splices shown may not be used for decks 45'-0" or less in width.

SECTION

OPTIONAL TRANSVERSE STRAIGHT BAR SPLICE

Scale: None

Notes:

1. See sheet 2 of 2 for longitudinal steel splice details.
2. Refer to pertinent bar lap charts for definition of cases and lap lengths.

APPROVAL	
R.S. Freedman DIRECTOR OFFICE OF STRUCTURES	
DATE: 11/14/95	
REVISIONS	
SHA	FHWA
4-21-09	

FHWA APPROVAL	
DATE:	

STATE OF MARYLAND
DEPARTMENT OF TRANSPORTATION
STATE HIGHWAY ADMINISTRATION
OFFICE OF STRUCTURES

BRIDGE DECK SLAB
SPLICE LOCATIONS

STANDARD NO. SUP-BD(DT)-201 SHEET 1 OF 2

SUPER - BRIDGE DECK

OLD NO. BR-SS(6.42)-95-311

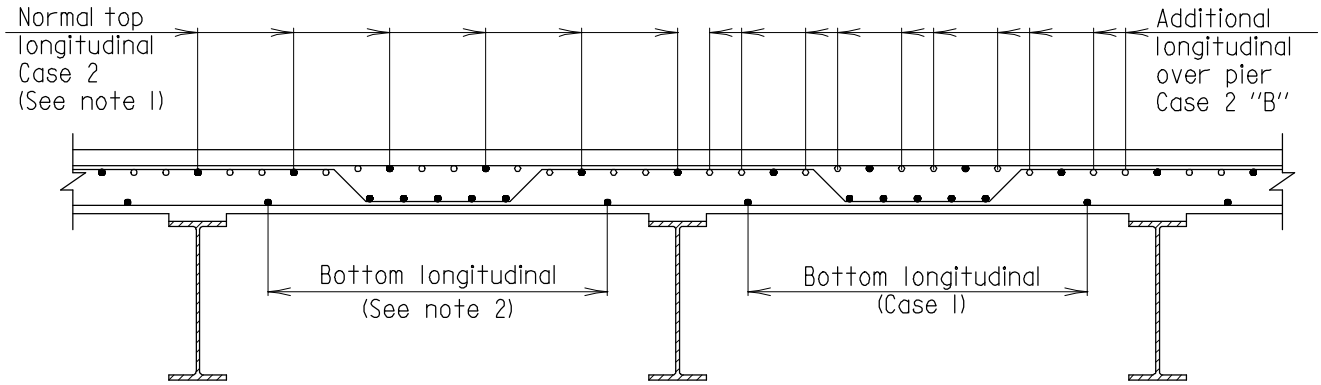

SECTION

Scale: None

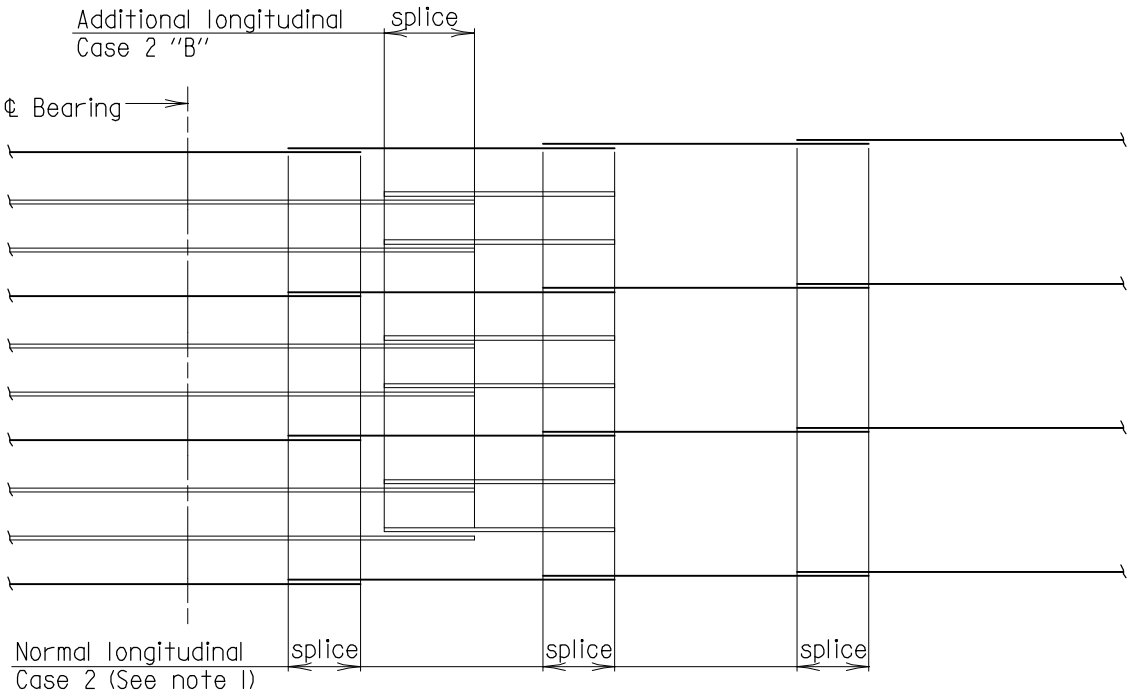

PLAN

TOP LONGITUDINAL SPLICES

Scale: None

Notes:

1. Top normal longitudinal splice length shall not be increased in area of additional longitudinal bars over pier.
2. Category of bottom longitudinal splice based on spacing of bars in bottom of truss.

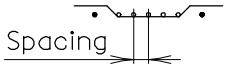

(Category B or C)

APPROVAL	
E.S. Freedman DIRECTOR OFFICE OF STRUCTURES	
DATE: 11/14/95	
REVISIONS	
SHA	FHWA

FHWA APPROVAL

DATE:

STATE OF MARYLAND
DEPARTMENT OF TRANSPORTATION
STATE HIGHWAY ADMINISTRATION
OFFICE OF STRUCTURES

BRIDGE DECK SLAB
SPLICE LOCATIONS

STANDARD NO. SUP-BD(DT)-201

SHEET 2 OF 2

SUPER - BRIDGE DECK

OLD NO. BR-SS(6.42)-95-311

SUPERSTRUCTURE

BRIDGE DECK

on STEEL GIRDERS

(SUP-BD(SG))

NOTES

Design:

1. AASHTO LRFD Bridge Design Specifications, dated 2010.
2. f'_c = 4000 p.s.i.
3. Design includes provision for 2" future wearing surface.

General:

1. Transverse bars shall be placed normal to ℄ stringers, except in case of curved stringers. When stringers are curved transverse bars shall be placed radially.
2. When skew angles are greater than 60° then Contractor may use either Reinforcing Steel Pattern No. 1 or No. 2 throughout bridge.
3. When the stringer spacing is less than 6'-0", all bars shall be straight top and bottom. No truss bars are to be used.
4. Typical sections shall include a minimum of three stringers and have a width of not less than 14.0' between centerlines of exterior stringers.
5. Overhangs shall be at least 21" but shall not exceed the smaller of 0.625 times the stringer spacing and 6.0'.
6. Reinforcing in the slab overhangs shall be designed in accordance with AASHTO.
7. All reinforcing steel in the deck slabs shall be epoxy coated.
8. Standard bridge deck slabs should not be used for stringer spacings less than 5'-0".
9. Standard bridge deck slabs should not be used for top flange widths less than 12".

APPROVAL		
E.S. Freedman DIRECTOR OFFICE OF STRUCTURES DATE: 12/4/79		
REVISIONS		
SHA	FHWA	
4-12-12	5-31-12	
FHWA APPROVAL DATE: 6-8-90		

STATE OF MARYLAND
DEPARTMENT OF TRANSPORTATION
STATE HIGHWAY ADMINISTRATION
OFFICE OF STRUCTURES

VERIFIED 1-24-2012 LRFD

BRIDGE DECK SLAB FOR STEEL GIRDERS
GENERAL NOTES AND BAR SPACING

STANDARD NO. SUP-BD(SG)-101 SHEET 1 OF 2

SUPER - BRIDGE DECK

OLD NO. BR-SS(6.11)-79-90(L)

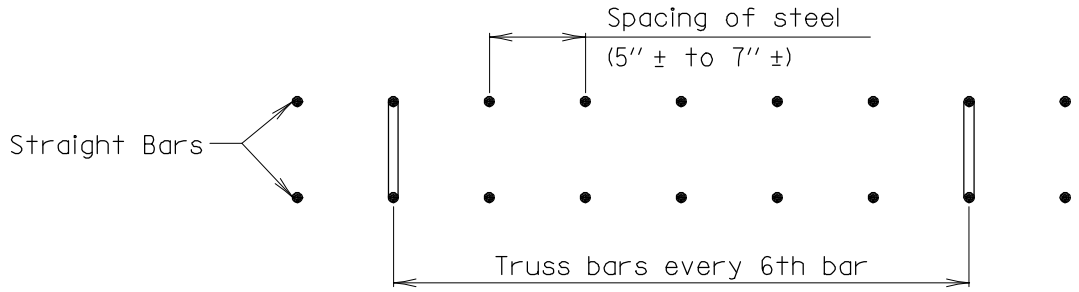

REINFORCING STEEL PATTERN NO. 1 PLACED NORMAL TO STRINGER*

*See General Note 1 on sheet 1 of 2

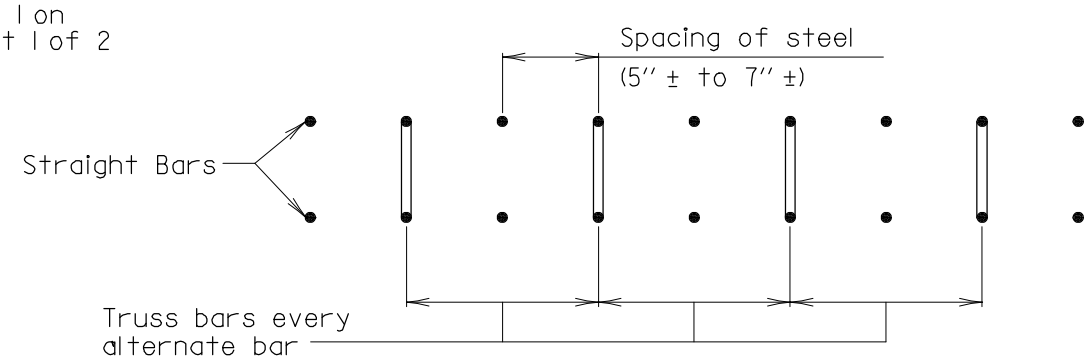

REINFORCING STEEL PATTERN NO.2 PLACED NORMAL TO STRINGER*

1. The Contractor has the option of using Reinforcing steel Pattern No.1 or No.2 in the unhatched portions of the decks shown below.
2. The Contractor shall use only Reinforcing Steel Pattern No.1 in the hatched portions of the decks shown below.

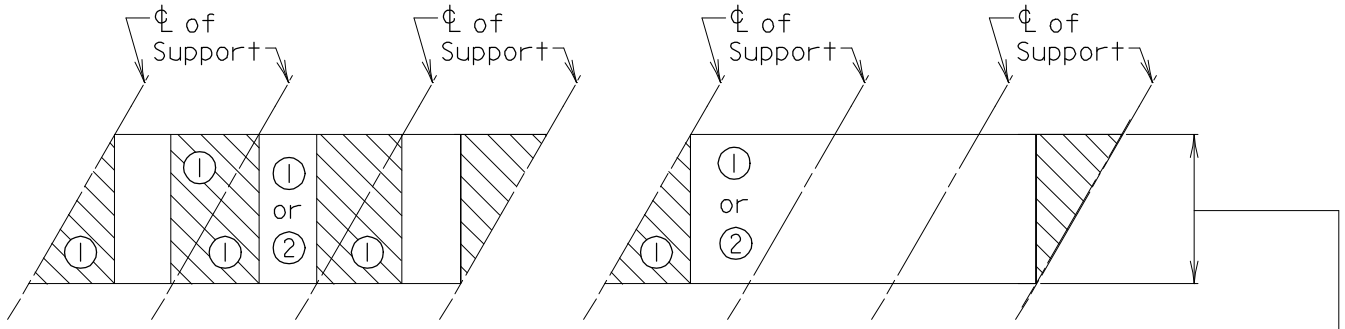

SIMPLE SPAN BRIDGE - PLAN

CONTINUOUS BRIDGE UNIT - PLAN

TRANSVERSE BAR SPACING FOR SPANS WITH SKEW ANGLES LESS THAN 60°

Scale: 1''=1'-0''

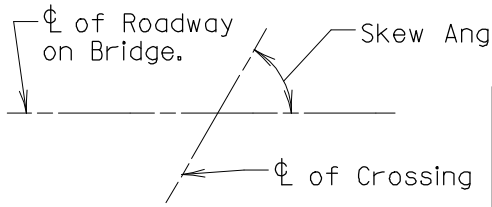

SKEW ANGLE

Scale: None

APPROVAL	
R.S. Freedman DIRECTOR OFFICE OF STRUCTURES DATE: 12/4/79	
REVISIONS	
SHA	FHWA
4-12-12	5-31-12

FHWA APPROVAL	
DATE: 6-8-90	

STATE OF MARYLAND
DEPARTMENT OF TRANSPORTATION
STATE HIGHWAY ADMINISTRATION
OFFICE OF STRUCTURES

VERIFIED 1-24-12 LRFD

BRIDGE DECK SLAB FOR STEEL GIRDERS
GENERAL NOTES AND BAR SPACING

STANDARD NO. SUP-BD(SG)-101 SHEET 2 OF 2

SUPER - BRIDGE DECK

OLD NO. BR-SS(6.11)-79-90(L)

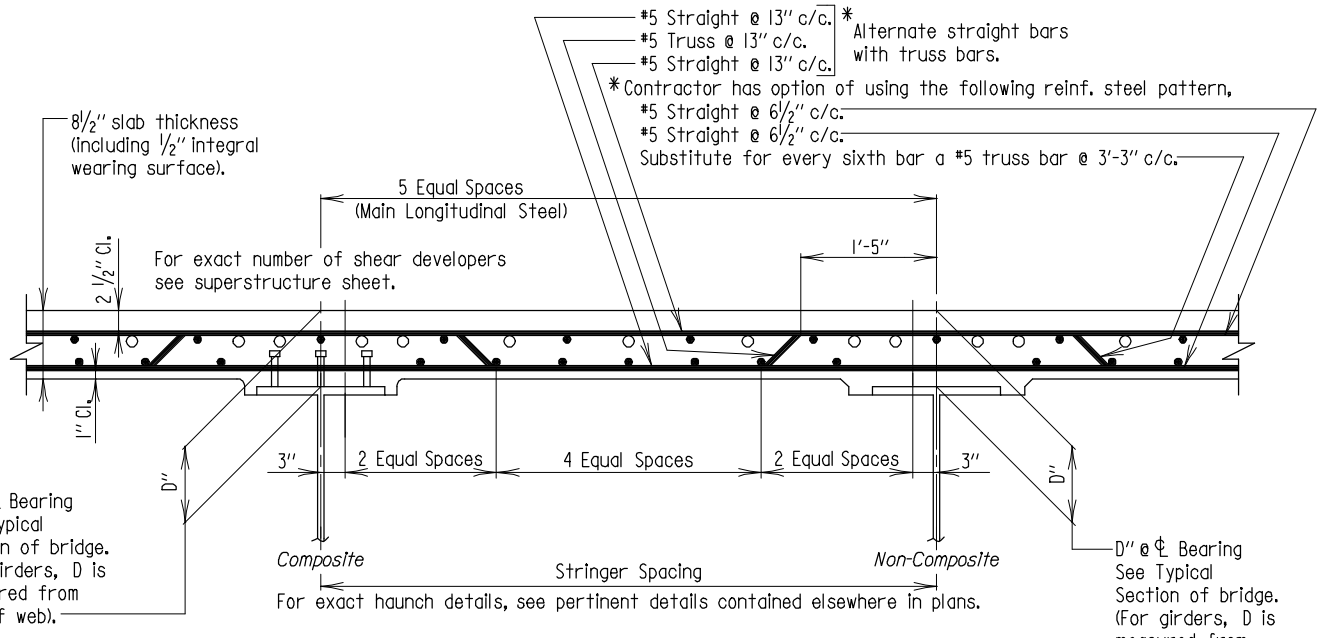

HL-93 TYPE XXXI SLAB
6'-0" TO 6'-6" STRINGER SPACING

Scale: ½"=1'-0"

Note:
For stringer spacing less than 6'-0" see Note 3 on Std. No. SUP-BD(SG)-101.

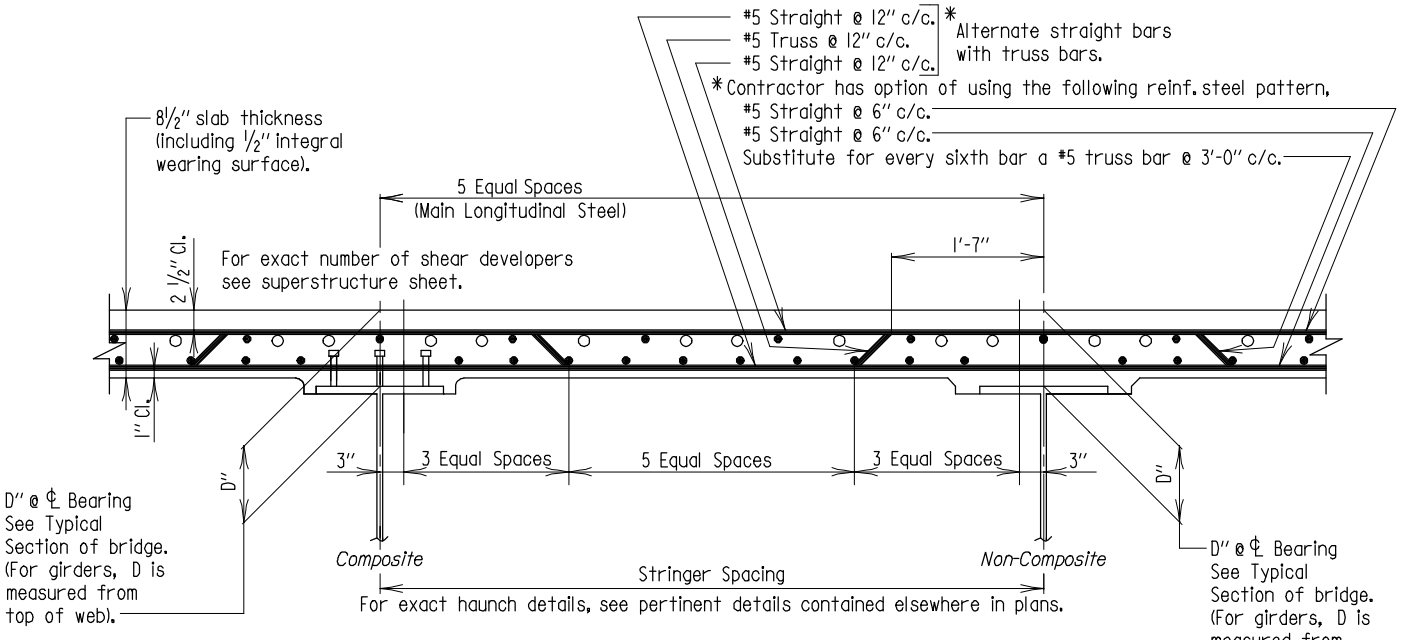

HL-93 TYPE XXXII SLAB
GREATER THAN 6'-6" TO 7'-0" STRINGER SPACING

Scale: ½"=1'-0"

Note:
Slanted lettering indicates notes "For Office Use Only".

Note:
1. All steel sizes and spacing based on ASTM A-615, Grade 60.
2. Transverse bars to be placed normal to center line of stringers. (For curved girder see SUP-BD(SG)-101.
3. All longitudinal bars are to be #5's placed as shown except as indicated by Note 4.
4. On continuous bridges, over piers, additional longitudinal steel to be added to the top of the slab between normal bars and indicated thus ○, shall be #6 bars. See Detail No. SUP-BD(SG)-201 for the lengths of these additional bars.
5. *Refer to SUP-BD(SG)-101 for overhang design requirements.*

APPROVAL	
R.S. Freedman DIRECTOR OFFICE OF STRUCTURES	
DATE: 4/23/08	
REVISIONS	
SHA	FHWA
1-24-12	5-31-12
FHWA APPROVAL	
DATE: 4-23-08	

STATE OF MARYLAND
DEPARTMENT OF TRANSPORTATION
STATE HIGHWAY ADMINISTRATION
OFFICE OF STRUCTURES

VERIFIED 1-24-12 LRFD

TYPE XXXI AND XXXII
BRIDGE DECK SLABS FOR STEEL GIRDERS
HL-93 LOADING

STANDARD NO. SUP-BD(SG)-102 SHEET 1 OF 1

SUPER - BRIDHE DECK

OLD NO. BR-SS(6.61)-08-385(L)

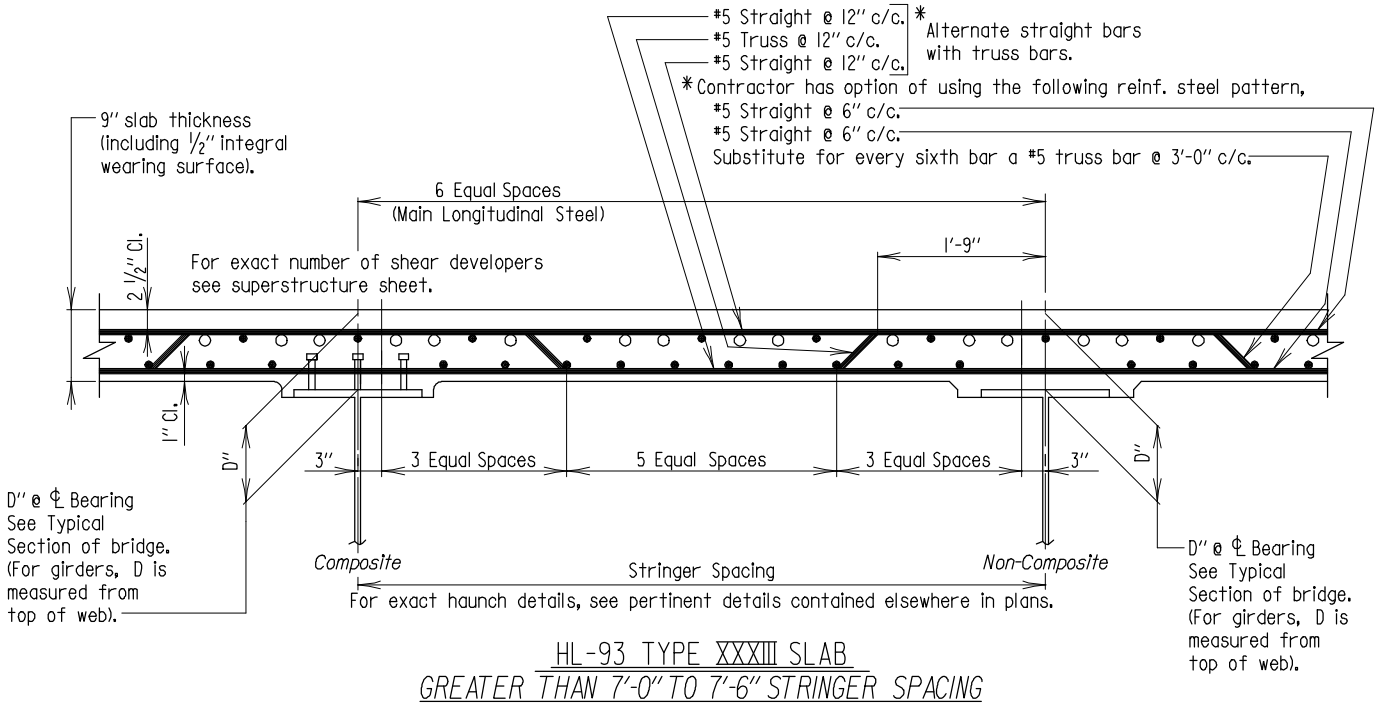

HL-93 TYPE XXXIII SLAB
GREATER THAN 7'-0" TO 7'-6" STRINGER SPACING

Scale: 1/2"=1'-0"

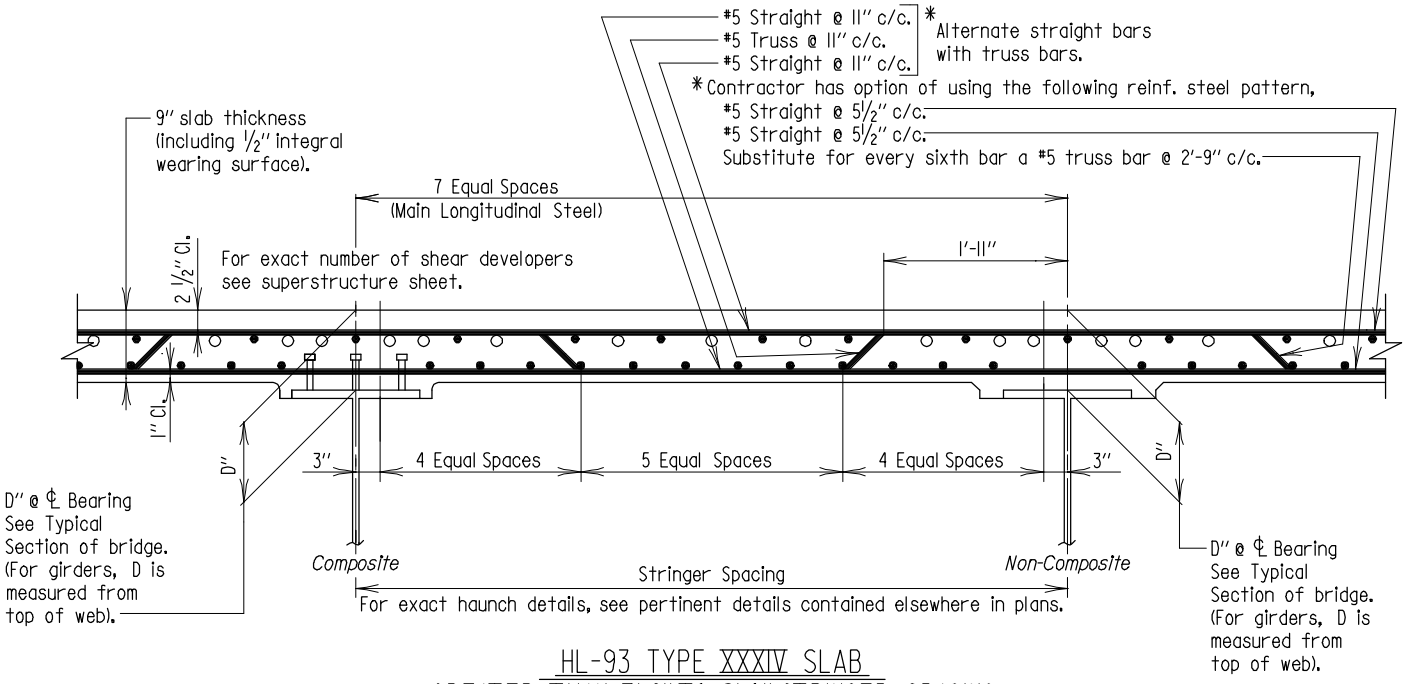

HL-93 TYPE XXXIV SLAB
GREATER THAN 7'-6" TO 8'-0" STRINGER SPACING

Scale: 1/2"=1'-0"

Note:
Slanted lettering indicates notes "For Office Use Only".

Note:
1. All steel sizes and spacing based on ASTM A-615, Grade 60.
2. Transverse bars to be placed normal to center line of stringers. (For curved girder see SUP-BD(SG)-101.
3. All longitudinal bars are to be #5's placed as shown except as indicated by Note 4.
4. On continuous bridges, over piers, additional longitudinal steel to be added to the top of the slab between normal bars and indicated thus ○, shall be #6 bars. See Detail No. SUP-BD(SG)-201 for the lengths of these additional bars.
5. *Refer to SUP-BD(SG)-101 for overhang design requirements.*

APPROVAL	
E.S. Freedman DIRECTOR OFFICE OF STRUCTURES	
DATE: 4/23/08	
REVISIONS	
SHA	FHWA
1-24-12	5-31-12

FHWA APPROVAL	
DATE: 4-23-08	

STATE OF MARYLAND
DEPARTMENT OF TRANSPORTATION
STATE HIGHWAY ADMINISTRATION
OFFICE OF STRUCTURES

VERIFIED 1-24-12 LRFD

TYPE XXXIII AND XXXIV
BRIDGE DECK SLABS FOR STEEL GIRDERS
HL-93 LOADING

STANDARD NO. SUP-BD(SG)-103 SHEET 1 OF 1

SUPER - BRIDGE DECK

OLD NO. BR-SS(6.62)-08-386(L)

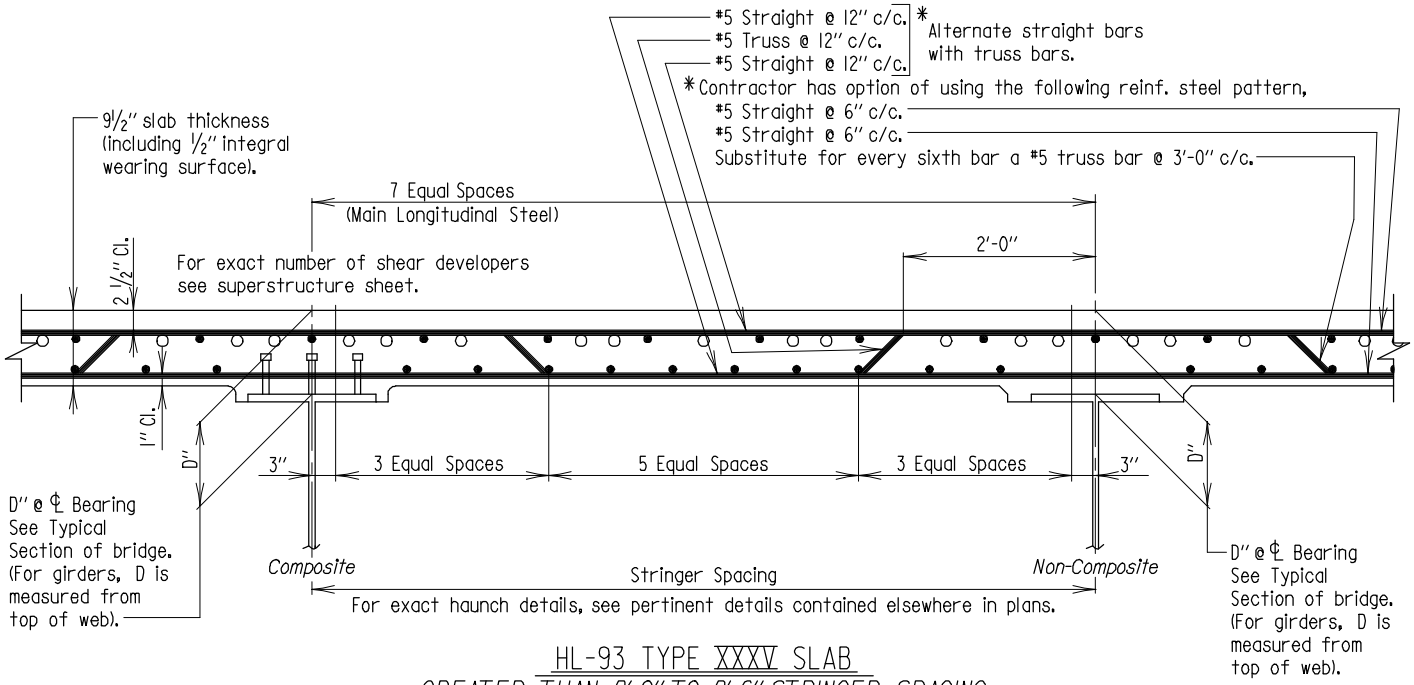

HL-93 TYPE XXXV SLAB
GREATER THAN 8'-0" TO 8'-6" STRINGER SPACING

Scale: 1/2"=1'-0"

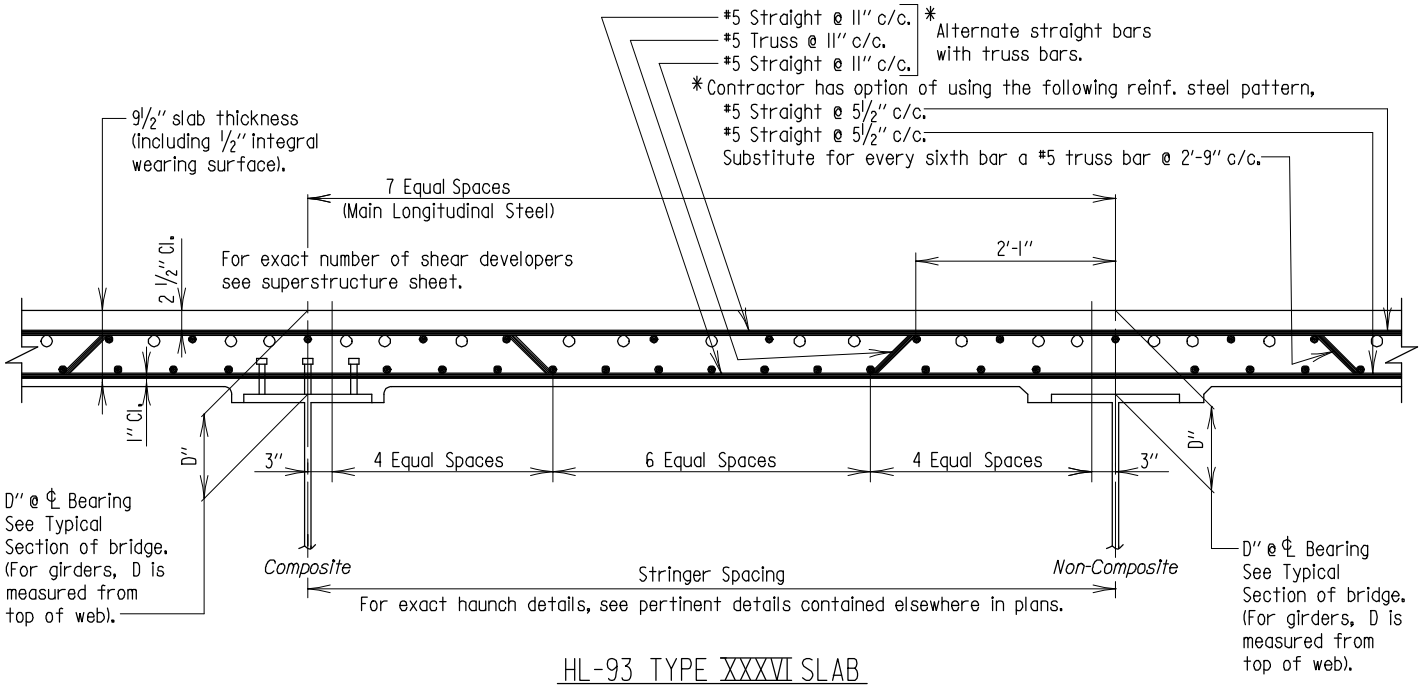

HL-93 TYPE XXXVI SLAB
GREATER THAN 8'-6" TO 9'-0" STRINGER SPACING

Scale: 1/2"=1'-0"

Note:
Slanted lettering indicates notes "For Office Use Only".

Note:
1. All steel sizes and spacing based on ASTM A-615, Grade 60.
2. Transverse bars to be placed normal to center line of stringers. (For curved girder see SUP-BD(SG)-101.
3. All longitudinal bars are to be #5's placed as shown except as indicated by Note 4.
4. On continuous bridges, over piers, additional longitudinal steel to be added to the top of the slab between normal bars and indicated thus ○, shall be #6 bars. See Detail No. SUP-BD(SG)-201 for the lengths of these additional bars.
5. *Refer to SUP-BD(SG)-101 for overhang design requirements.*

APPROVAL	
R.S. Friedman DIRECTOR OFFICE OF STRUCTURES	
DATE: 4/23/08	
REVISIONS	
SHA	FHWA
1-24-12	5-31-12

FHWA APPROVAL
DATE: 4-23-08

STATE OF MARYLAND
DEPARTMENT OF TRANSPORTATION
STATE HIGHWAY ADMINISTRATION
OFFICE OF STRUCTURES

VERIFIED 1-24-12 LRFD

TYPE XXXV AND XXXVI
BRIDGE DECK SLABS FOR STEEL GIRDERS
HL-93 LOADING

STANDARD NO. SUP-BD(SG)-104 SHEET 1 OF 1

SUPER - BRIDGE DECK

OLD NO. BR-SS(6.63)-08-387(L)

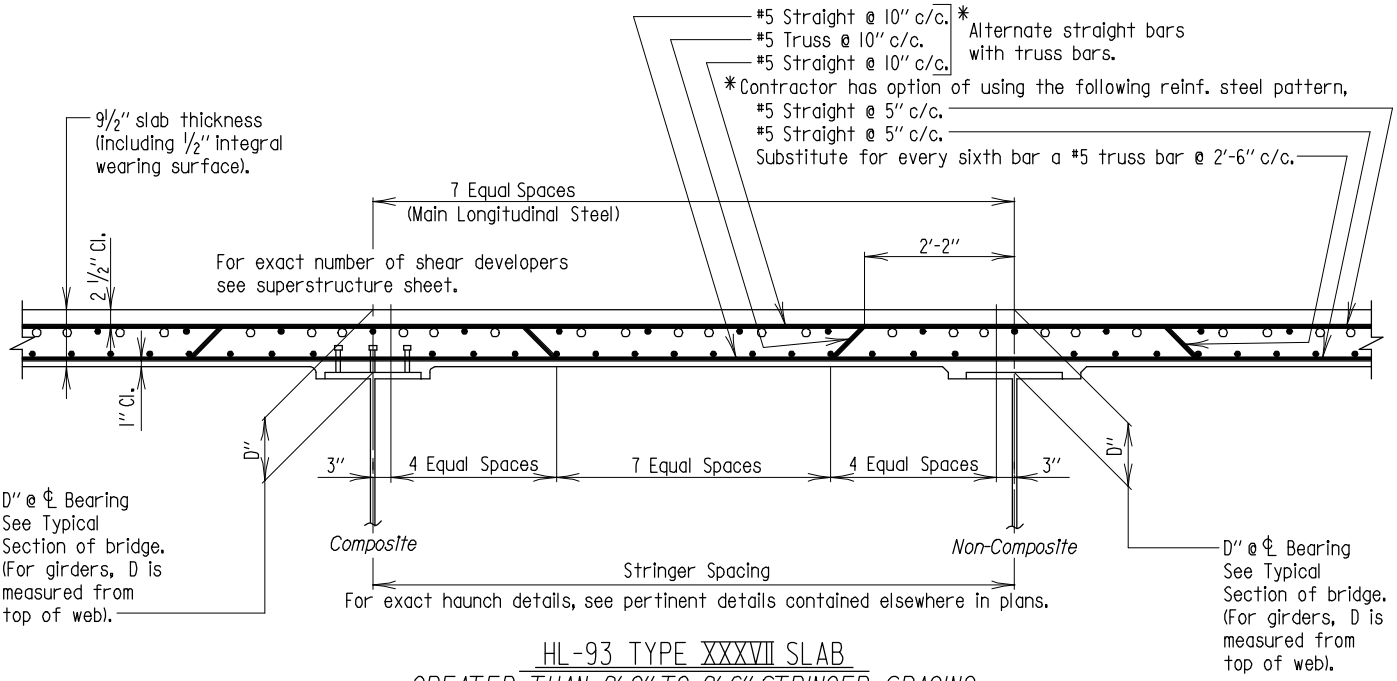

HL-93 TYPE XXXVII SLAB
GREATER THAN 9'-0" TO 9'-6" STRINGER SPACING

Scale: ⅜"=1'-0"

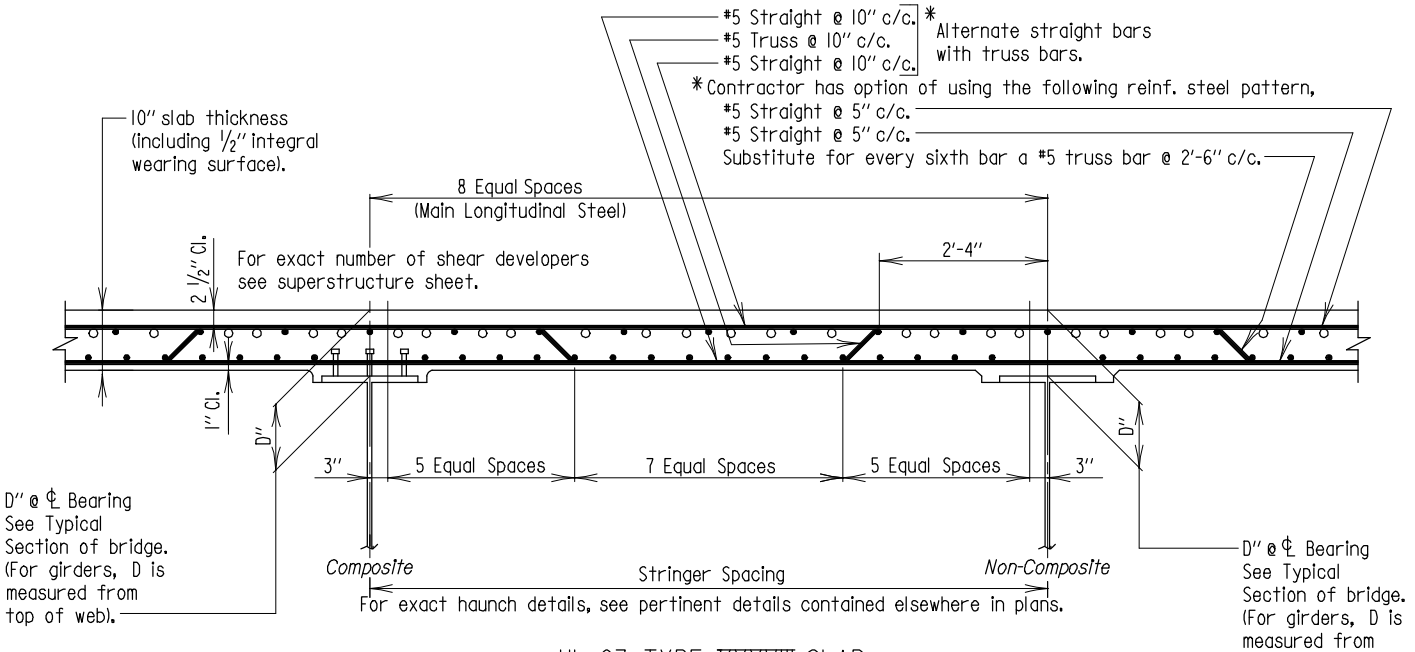

HL-93 TYPE XXXVIII SLAB
GREATER THAN 9'-6" TO 10'-0" STRINGER SPACING

Scale: ⅜"=1'-0"

Note:
Slanted lettering indicates notes "For Office Use Only".

Note:
1. All steel sizes and spacing based on ASTM A-615, Grade 60.
2. Transverse bars to be placed normal to center line of stringers. (For curved girder see SUP-BD(SG)-101.
3. All longitudinal bars are to be #5's placed as shown except as indicated by Note 4.
4. On continuous bridges, over piers, additional longitudinal steel to be added to the top of the slab between normal bars and indicated thus ○, shall be #6 bars. See Detail No. SUP-BD(SG)-201 for the lengths of these additional bars.
5. *Refer to SUP-BD(SG)-101 for overhang design requirements.*

APPROVAL	
E.S. Freedman DIRECTOR OFFICE OF STRUCTURES	
DATE: 4/23/08	
REVISIONS	
SHA	FHWA
1-24-12	5-31-12

FHWA APPROVAL
DATE: 4-23-08

STATE OF MARYLAND
DEPARTMENT OF TRANSPORTATION
STATE HIGHWAY ADMINISTRATION
OFFICE OF STRUCTURES

VERIFIED 1-24-12 LRFD

TYPE XXXVII AND XXXVIII
BRIDGE DECK SLABS FOR STEEL GIRDERS
HL-93 LOADING

STANDARD NO. SUP-BD(SG)-105 SHEET 1 OF 1

SUPER - BRIDGE DECK

OLD NO. BR-SS(6.64)-08-388(L)

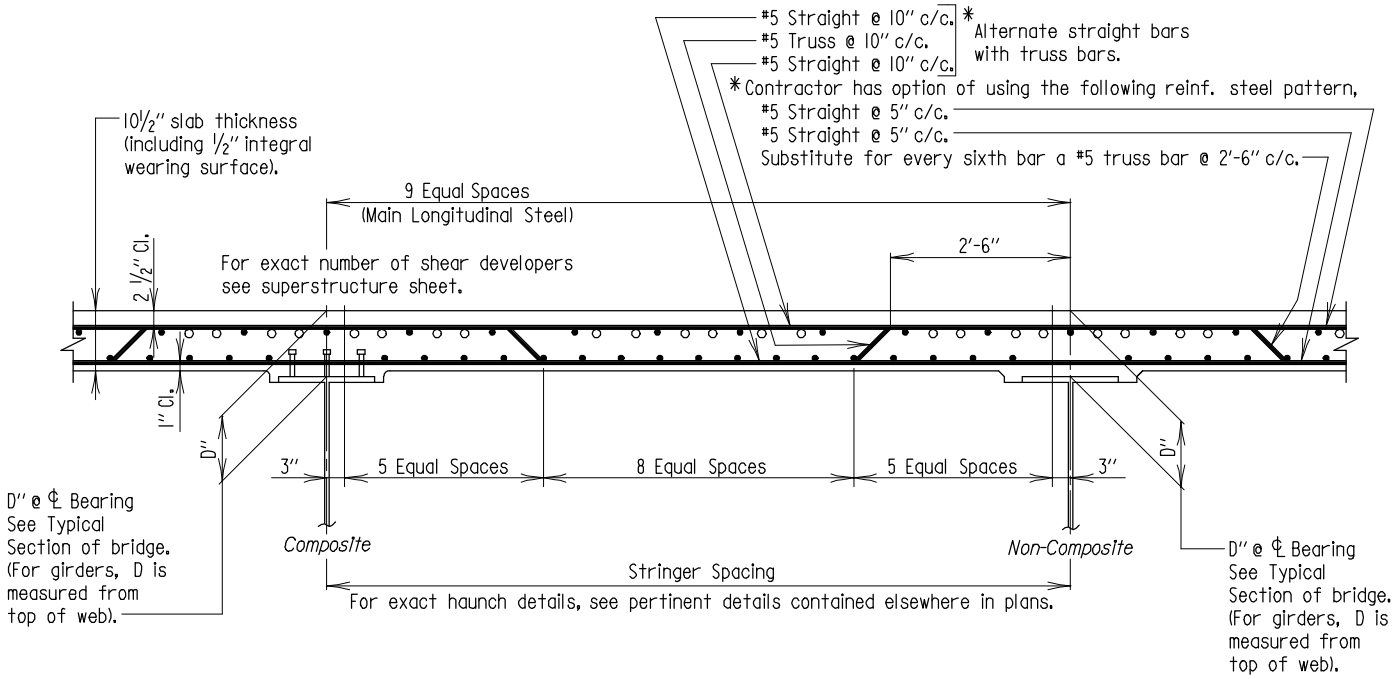

HL-93 TYPE XXXIX SLAB
GREATER THAN 10'-0" TO 10'-6" STRINGER SPACING

Scale: 3/8"=1'-0"

Note:
1. All steel sizes and spacing based on ASTM A-615, Grade 60.
2. Transverse bars to be placed normal to center line of stringers. (For curved girder see SUP-BD(SG)-101.
3. All longitudinal bars are to be #5's placed as shown except as indicated by Note 4.
4. On continuous bridges, over piers, additional longitudinal steel to be added to the top of the slab between normal bars and indicated thus ○, shall be #6 bars. See Detail No. SUP-BD(SG)-201 for the lengths of these additional bars.
5. *Refer to SUP-BD(SG)-101 for overhang design requirements.*

Note:
Slanted lettering indicates notes "For Office Use Only".

APPROVAL	
E.S. Freedman DIRECTOR OFFICE OF STRUCTURES	
DATE: 4/23/08	
REVISIONS	
SHA	FHWA
1-24-12	5-31-12
FHWA APPROVAL	
DATE: 4-23-08	

STATE OF MARYLAND
DEPARTMENT OF TRANSPORTATION
STATE HIGHWAY ADMINISTRATION
OFFICE OF STRUCTURES

VERIFIED 1-24-12 LRFD

TYPE XXXIX BRIDGE DECK SLAB FOR STEEL GIRDERS
HL-93 LOADING

STANDARD NO. SUP-BD(SG)-106 SHEET 1 OF 1

SUPER - BRIDGE DECK

OLD NO. BR-SS(6.65)-08-389(L)

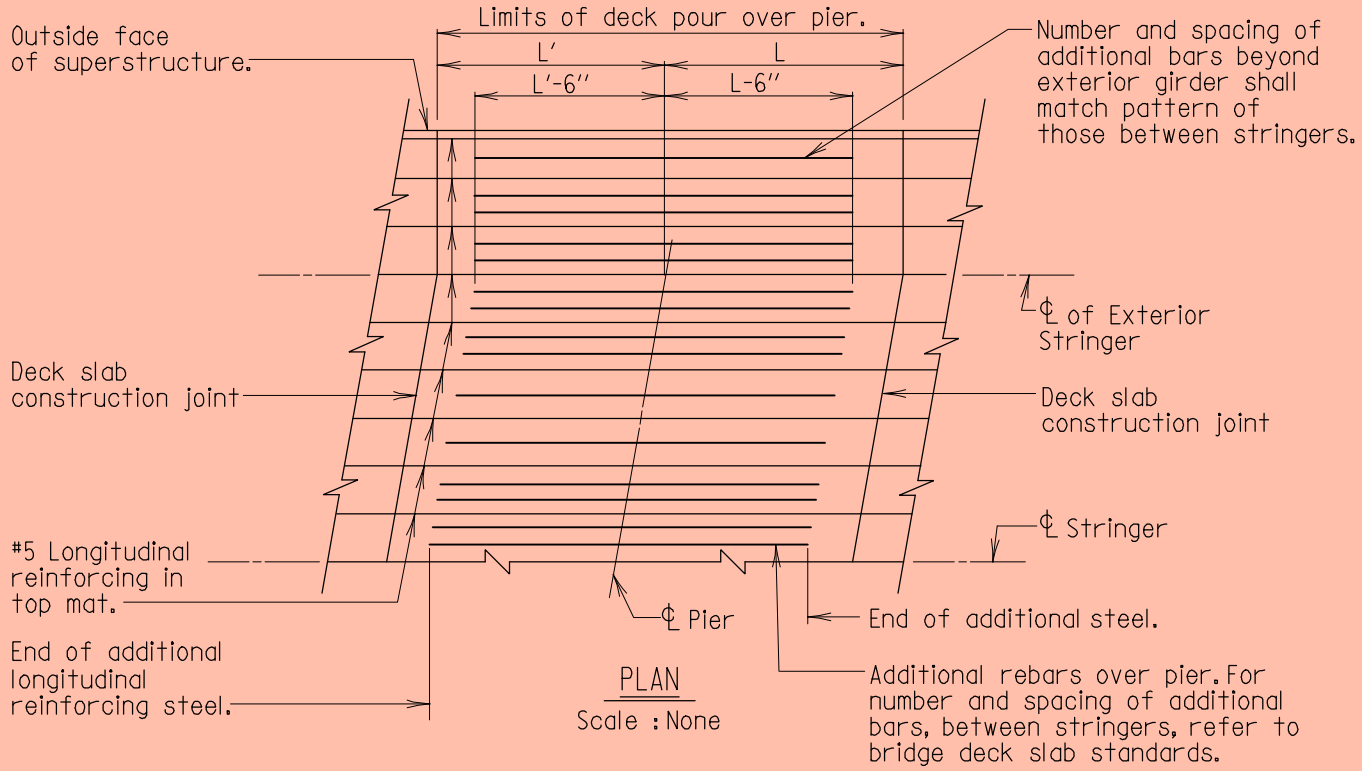

PLAN

Scale : None

Bridge #_____ Description: _____

Location	L' (Back Stationing Span)	L (Ahead Stationing Span)
Pier_____		
Pier_____		
Pier_____		
Pier_____		
Pier_____		
Pier_____		

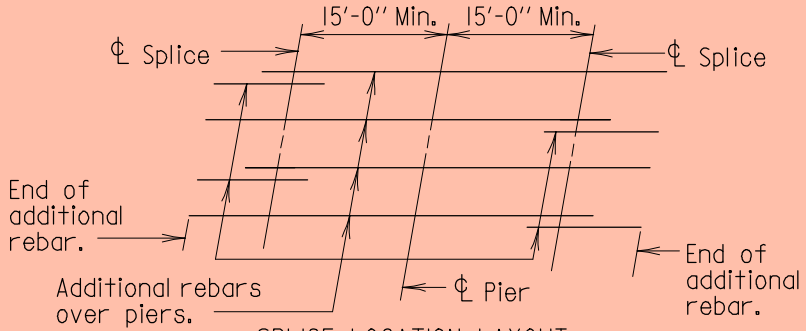

SPLICE LOCATION LAYOUT

Note:
1. If additional longitudinal reinforcing in pour requires splicing, then the reinforcing shall be spliced as per Splice Location Layout.
2. Additional longitudinal reinforcing bars shall be #6.

APPROVAL	
R.S. Freedman DIRECTOR OFFICE OF STRUCTURES	
DATE: 3/31/88	
REVISIONS	
SHA	FHWA
1-24-12	5-31-12
9-5-12	
FHWA APPROVAL	
DATE: 6-8-90	

STATE OF MARYLAND
DEPARTMENT OF TRANSPORTATION
STATE HIGHWAY ADMINISTRATION
OFFICE OF STRUCTURES

ADDITIONAL LONGITUDINAL REINFORCING IN TOP OF CONTINUOUS DECK SLABS OVER PIERS FOR STEEL GIRDERS

STANDARD NO. SUP-BD(SG)-201 SHEET 1 OF 1

SUPER - BRIDGE DECK

OLD NO. BR-SS(6.30)-88-195

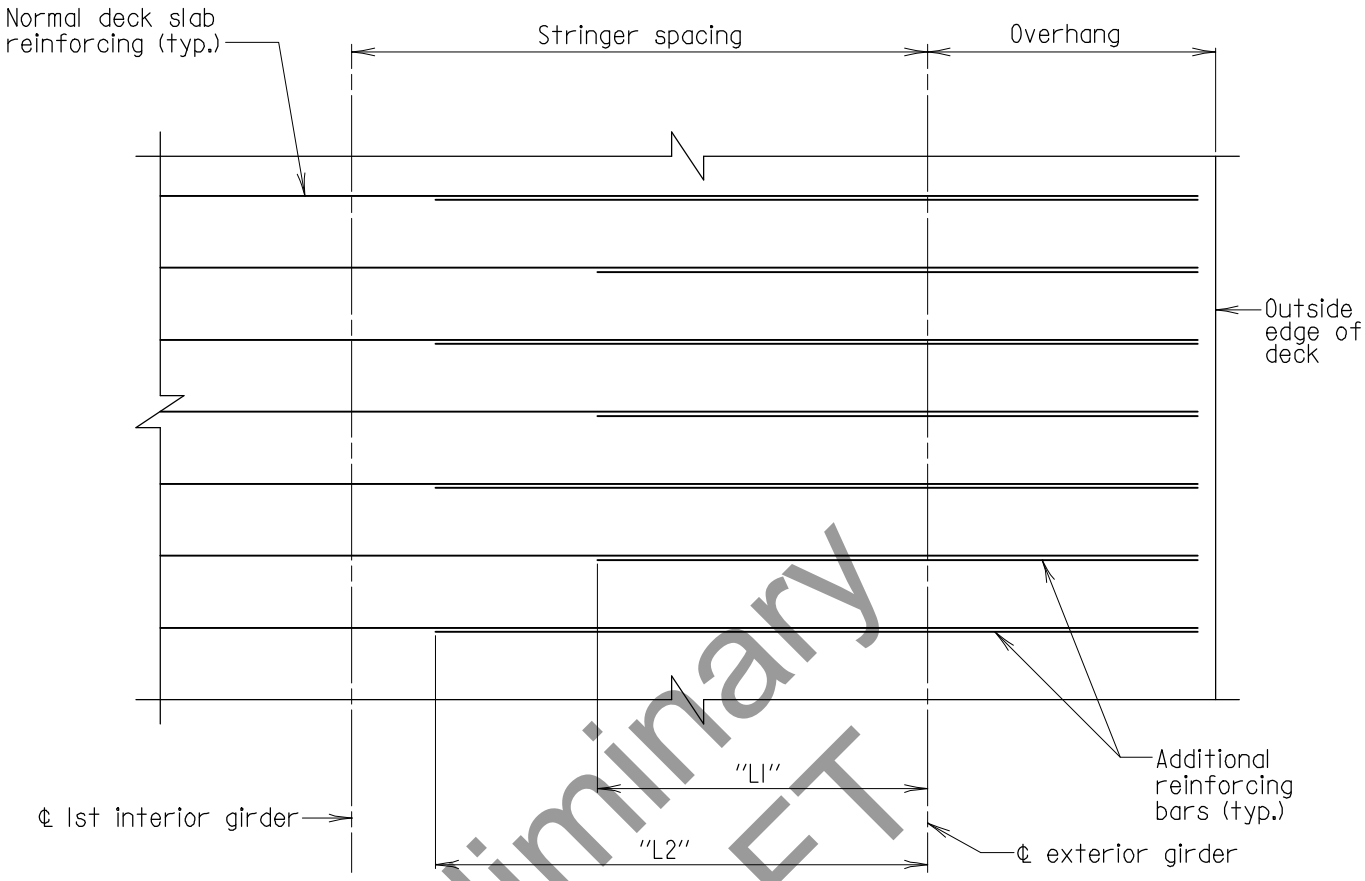

PLAN
Scale: 3/8" = 1'-0"

Preliminary DRAFT

Standard Deck Type	Additional Bar Size	"L1"	"L2"	Maximum Overhang
XXXI	#6	4'-7"	6'-10"	4'-0"
XXXII	#6	4'-8 1/2"	7'-0"	4'-4 1/2"
XXXIII	#6	4'-9"	7'-0"	4'-8 1/4"
XXXIV	#5	4'-7"	4'-7"	5'-0"
XXXV	#6	5'-1 1/4"	7'-4 1/4"	5'-3 3/4"
XXXVI	#5	4'-10 3/8"	4'-10 3/8"	5'-7 1/2"
XXXVII	#5	4'-8 1/4"	4'-8 1/4"	5'-11 1/4"
XXXVIII	#5	4'-6"	4'-6"	6'-0"
XXXIX	#5	4'-3 1/8"	4'-3 1/8"	6'-0"

Notes:
1. Additional reinforcing to be placed in top mat of deck.
2. Bundle additional bar with normal deck reinforcing.
3. Deck overhangs greater than shown will need to be designed.

* PRELIMINARY DRAFT *

APPROVAL
_____ DIRECTOR
OFFICE OF STRUCTURES
DATE: 09/01/15

REVISIONS

SHA	FHWA

FHWA APPROVAL
DATE:

STATE OF MARYLAND
DEPARTMENT OF TRANSPORTATION
STATE HIGHWAY ADMINISTRATION
OFFICE OF STRUCTURES

ADDITIONAL REINFORCING FOR CONCRETE BRIDGE DECK OVERHANG FOR 42" F-SHAPE

NO. SUP-BD(SG)-202 SHEET 1 OF 1

SUPER - BRIDGE DECK

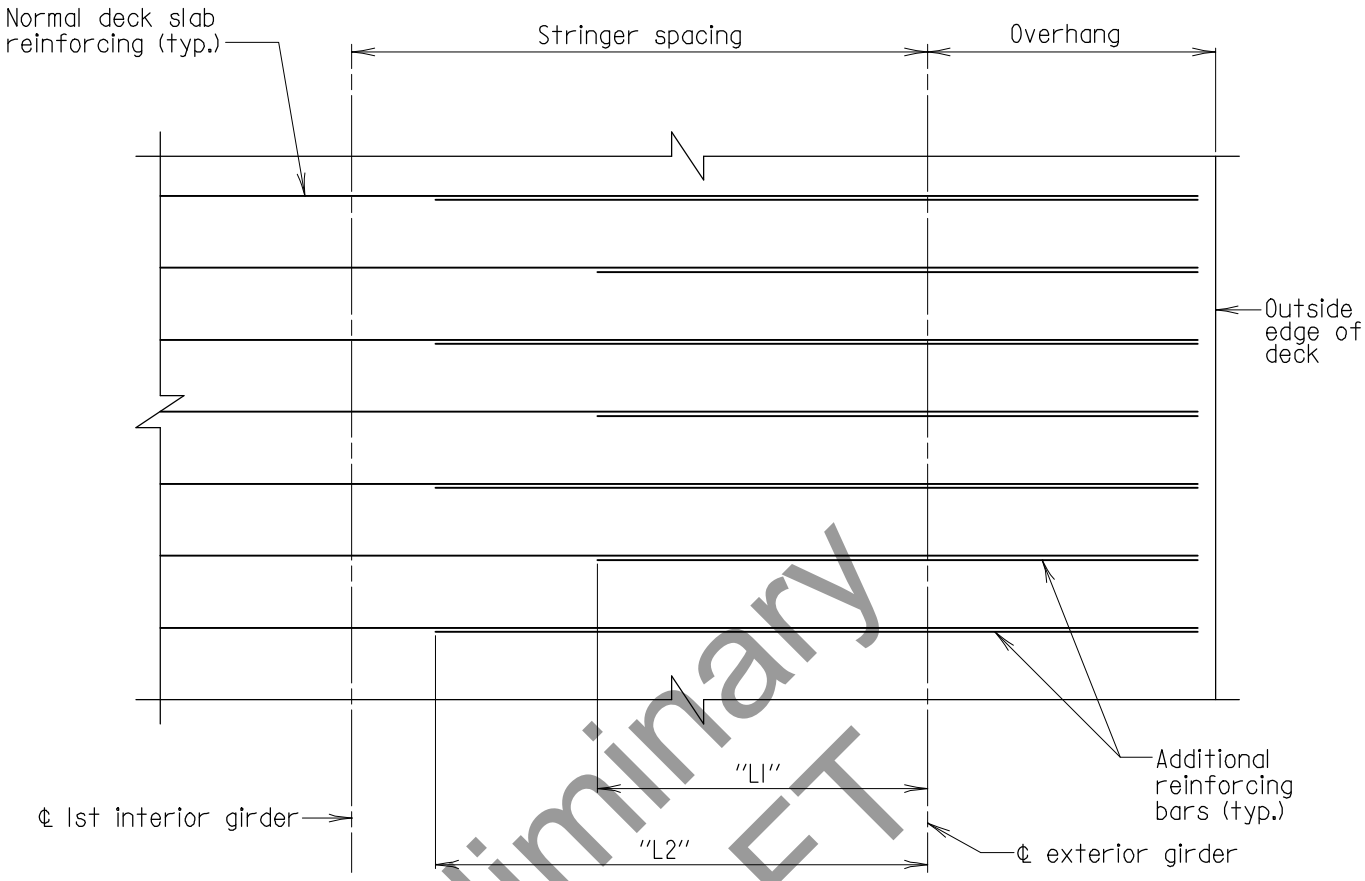

PLAN
Scale: 3/8" = 1'-0"

Preliminary DRAFT

Standard Deck Type	Additional Bar Size	"L1"	"L2"	Maximum Overhang
XXXI	#6	4'-6 3/4"	6'-9 3/4"	4'-0"
XXXII	#6	4'-8 1/4"	6'-11 1/4"	4'-4 1/2"
XXXIII	#6	4'-8 3/4"	6'-11 3/4"	4'-8 1/4"
XXXIV	#5	4'-6 3/8"	4'-6 3/8"	5'-0"
XXXV	#6	5'-0 5/8"	7'-3 5/8"	5'-3 3/4"
XXXVI	#5	4'-9 1/2"	4'-9 1/2"	5'-7 1/2"
XXXVII	#5	4'-7 1/8"	4'-7 1/8"	5'-11 1/4"
XXXVIII	#5	4'-5 1/4"	4'-5 1/4"	6'-0"
XXXIX	#5	4'-1 5/8"	4'-1 5/8"	6'-0"

Notes:
1. Additional reinforcing to be placed in top mat of deck.
2. Bundle additional bar with normal deck reinforcing.
3. Deck overhangs greater than shown will need to be designed.

* PRELIMINARY DRAFT *

APPROVAL
_____ DIRECTOR
OFFICE OF STRUCTURES
DATE: 09/01/15

REVISIONS

SHA	FHWA

FHWA APPROVAL
DATE:

STATE OF MARYLAND
DEPARTMENT OF TRANSPORTATION
STATE HIGHWAY ADMINISTRATION
OFFICE OF STRUCTURES

ADDITIONAL REINFORCING FOR
CONCRETE BRIDGE DECK OVERHANG
FOR THREE STRAND STRUCTURAL TUBE RAIL

NO. SUP-BD(SG)-203 SHEET 1 OF 1

SUPER - BRIDGE DECK

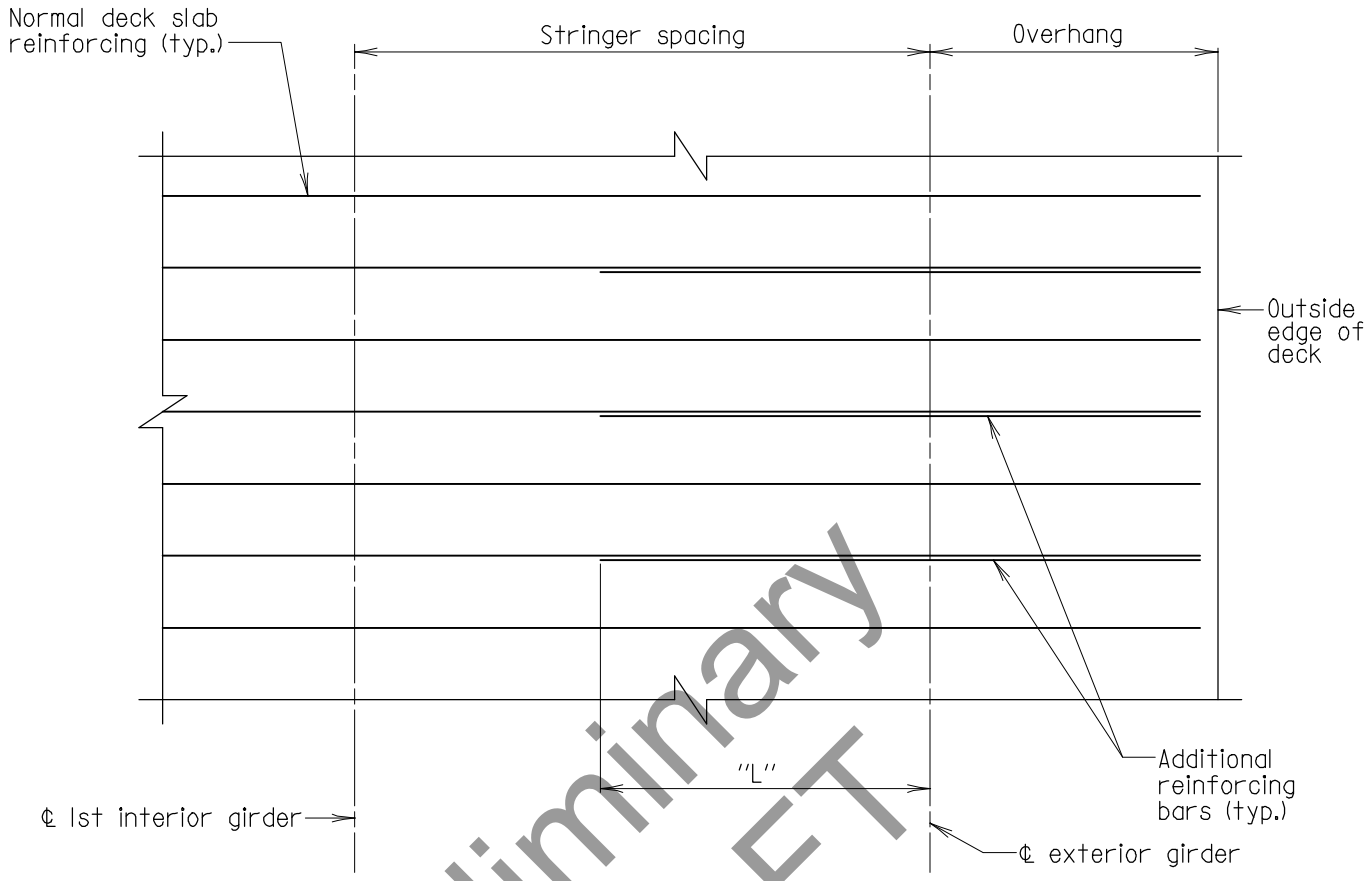

PLAN
Scale: 3/8" = 1'-0"

Preliminary DRAFT

Standard Deck Type	Additional Bar Size	"L"	Bundle with Main Deck Reinforcing	Maximum Overhang
XXXI	#5	3'-0"	each bar	4'-0"
XXXII	#5	3'-0"	every other	4'-4 1/2"
XXXIII	#5	2'-10 3/4"	every other	4'-8 1/4"
XXXIV	#5	2'-8 1/4"	every other	5'-0"
XXXV	#5	3'-1 1/8"	every other	5'-3 3/4"
XXXVI	#5	2'-10"	every third	5'-7 1/2"
XXXVII	#5	2'-5 5/8"	every fourth	5'-11 1/4"
XXXVIII	#5	2'-0 3/8"	every fifth	6'-0"
XXXIX	#5	1'-10 1/2"	every sixth	6'-0"

Notes:
1. Additional reinforcing to be placed in top mat of deck.
2. Bundle additional bar with normal deck reinforcing.
3. Deck overhangs greater than shown will need to be designed.

* PRELIMINARY DRAFT *

APPROVAL
_____ DIRECTOR
OFFICE OF STRUCTURES
DATE: 09/01/15

REVISIONS

SHA	FHWA

FHWA APPROVAL
DATE:

STATE OF MARYLAND
DEPARTMENT OF TRANSPORTATION
STATE HIGHWAY ADMINISTRATION
OFFICE OF STRUCTURES

ADDITIONAL REINFORCING FOR CONCRETE BRIDGE DECK OVERHANG FOR PARAPET WITH SIDEWALK

NO. SUP-BD(SG)-204 SHEET 1 OF 1

SUPER - BRIDGE DECK

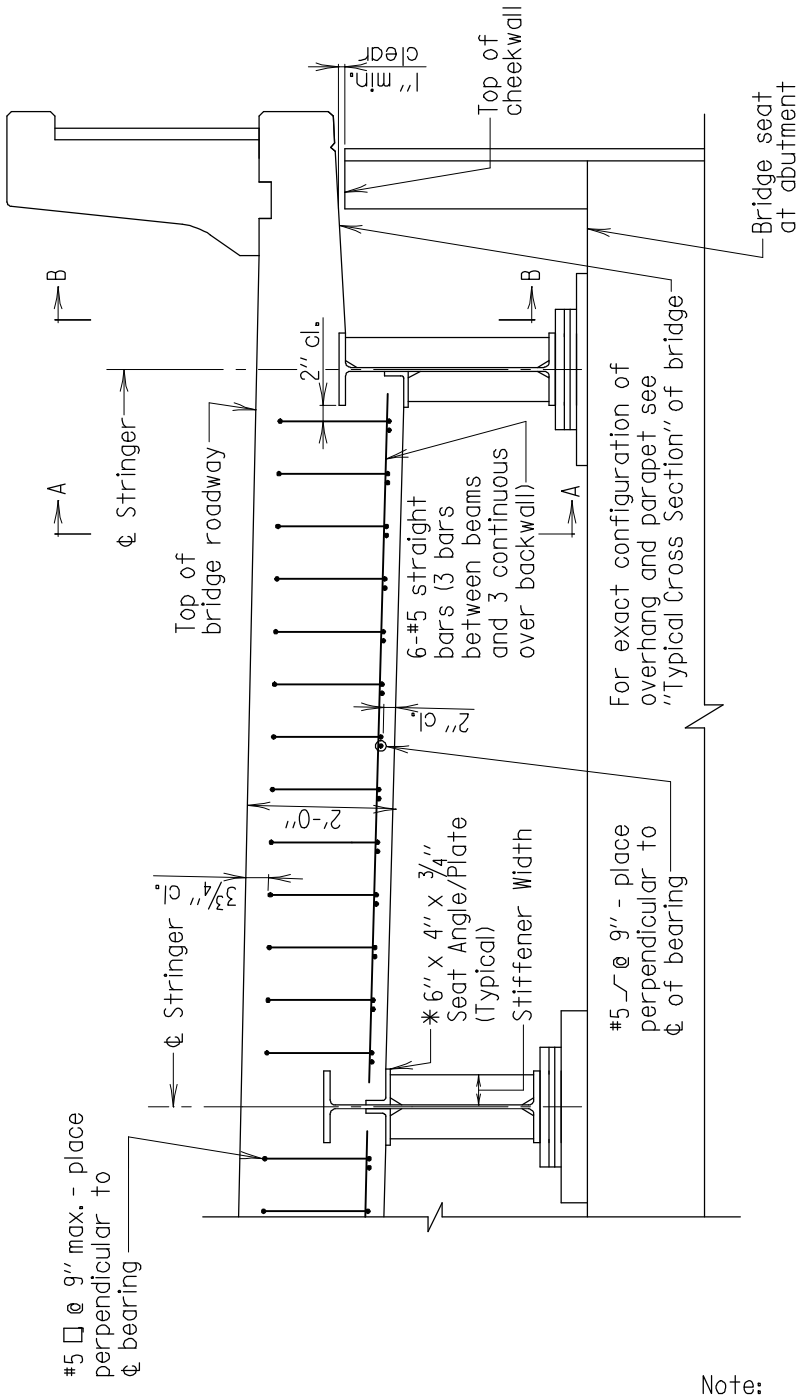

ELEVATION AT BRIDGE SEAT AREA OVER BEAMS

Scale: ⅜" = 1'-0"

Note:
Normal deck reinforcing not shown for clarity.

Notes:
1. For Section A-A, see sheet 3 of 4.
2. For Section B-B, see sheet 4 of 4.
3. * Longest leg of angle shall be increased as necessary so that angle exceeds stiffener width by at least ½". In lieu of the seat angle a ¾" plate may be used. The plate shall be a minimum of 6" wide and shall exceed stiffener width by at least ½".

APPROVAL	
E.S. Freedman DIRECTOR OFFICE OF STRUCTURES	
DATE: 12/20/11	
REVISIONS	
SHA	FHWA
11-27-12	
2-28-13	
6-26-13	
FHWA APPROVAL	
DATE:	

STATE OF MARYLAND
DEPARTMENT OF TRANSPORTATION
STATE HIGHWAY ADMINISTRATION
OFFICE OF STRUCTURES

CONCRETE DIAPHRAGMS AT ABUTMENTS CARRYING STEEL GIRDERS WITH STEEL FIXED BEARINGS OR STEEL EXPANSION BEARINGS WITH LENGTHS CONTRIBUTING TO EXPANSION ≤ 70 FEET

STANDARD NO. SUP-BD(SG)-301 SHEET 1 OF 4

SUPER - BRIDGE DECK

OLD NO. BR-SS(6.66)-11-392

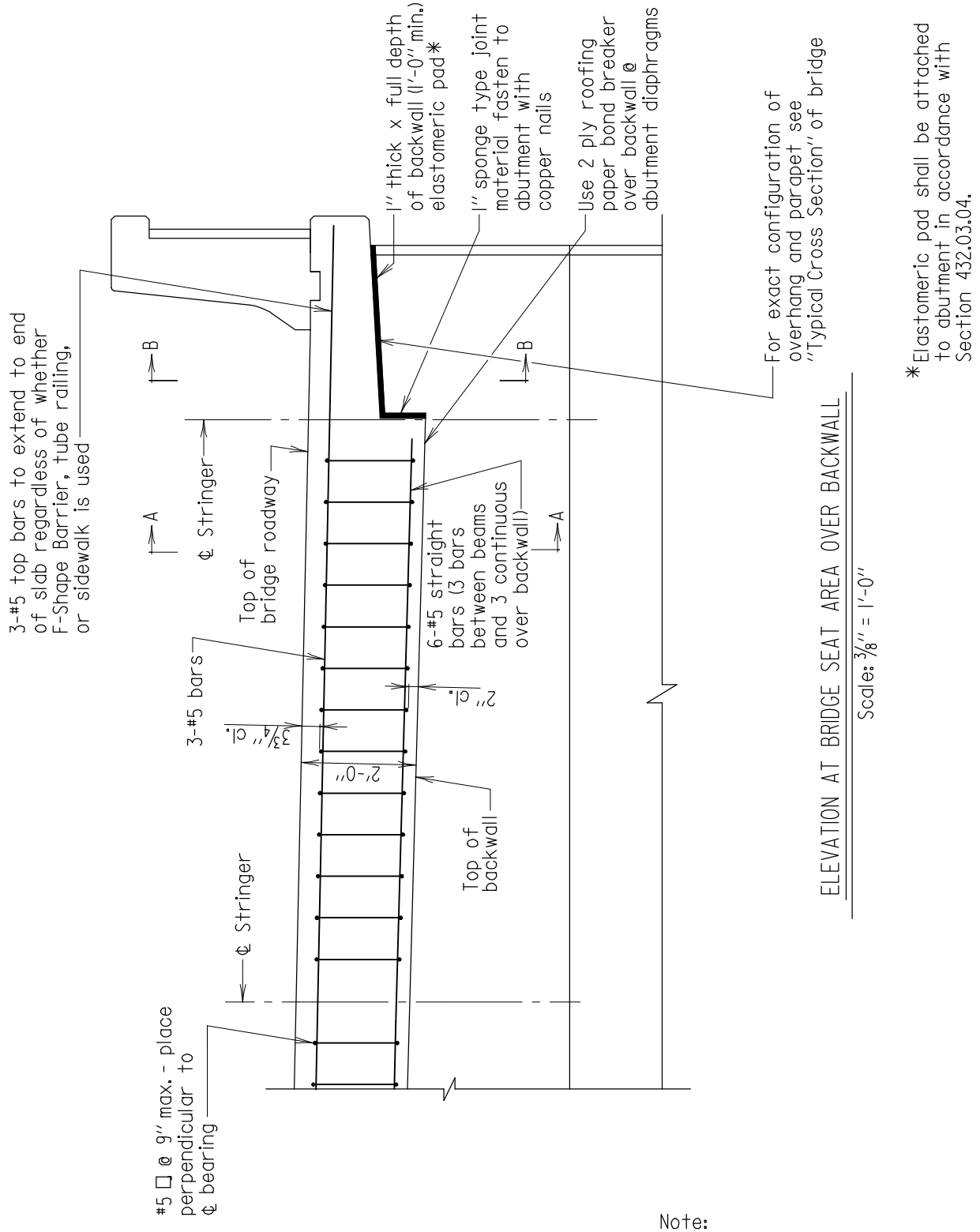

ELEVATION AT BRIDGE SEAT AREA OVER BACKWALL

Scale: 3/8" = 1'-0"

Note:
Normal deck reinforcing not shown for clarity.

Notes:
1. For Section A-A, see sheet 3 of 4.
2. For Section B-B, see sheet 4 of 4.

APPROVAL	
E.S. Freedman DIRECTOR OFFICE OF STRUCTURES	
DATE: 12/20/11	
REVISIONS	
SHA	FHWA
2-28-13	
3-7-13	
6-26-13	

FHWA APPROVAL
DATE:

STATE OF MARYLAND
DEPARTMENT OF TRANSPORTATION
STATE HIGHWAY ADMINISTRATION
OFFICE OF STRUCTURES

CONCRETE DIAPHRAGMS AT ABUTMENTS CARRYING STEEL GIRDERS WITH STEEL FIXED BEARINGS OR STEEL EXPANSION BEARINGS WITH LENGTHS CONTRIBUTING TO EXPANSION ≤ 70 FEET

STANDARD NO. SUP-BD(SG)-301 SHEET 2 OF 4

SUPER - BRIDGE DECK

OLD NO. BR-SS(6.66)-11-392

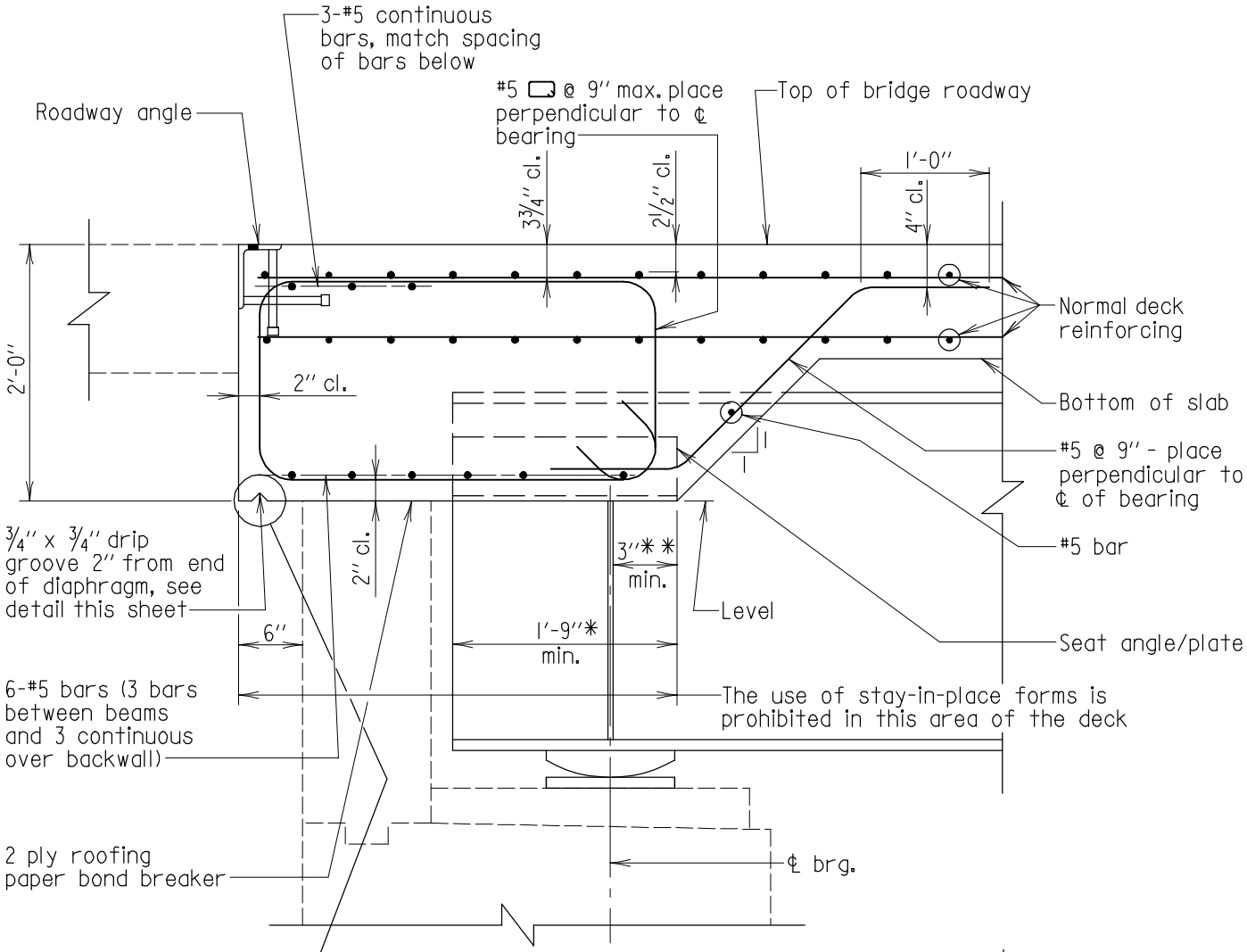

Note:
All reinforcing steel shown shall be epoxy coated.

APPROVAL		
E.S. Freedman DIRECTOR OFFICE OF STRUCTURES DATE: 12/20/11		
REVISIONS		
SHA	FHWA	
2-28-13		
3-7-13		
6-26-13		
3-18-14		
FHWA APPROVAL		
DATE:		

STATE OF MARYLAND
DEPARTMENT OF TRANSPORTATION
STATE HIGHWAY ADMINISTRATION
OFFICE OF STRUCTURES

CONCRETE DIAPHRAGMS AT ABUTMENTS CARRYING STEEL GIRDERS WITH STEEL FIXED BEARINGS OR STEEL EXPANSION BEARINGS WITH LENGTHS CONTRIBUTING TO EXPANSION ≤ 70 FEET

STANDARD NO. SUP-BD(SG)-301 SHEET 3 OF 4

SUPER - BRIDGE DECK

OLD NO. BR-SS(6.66)-11-392

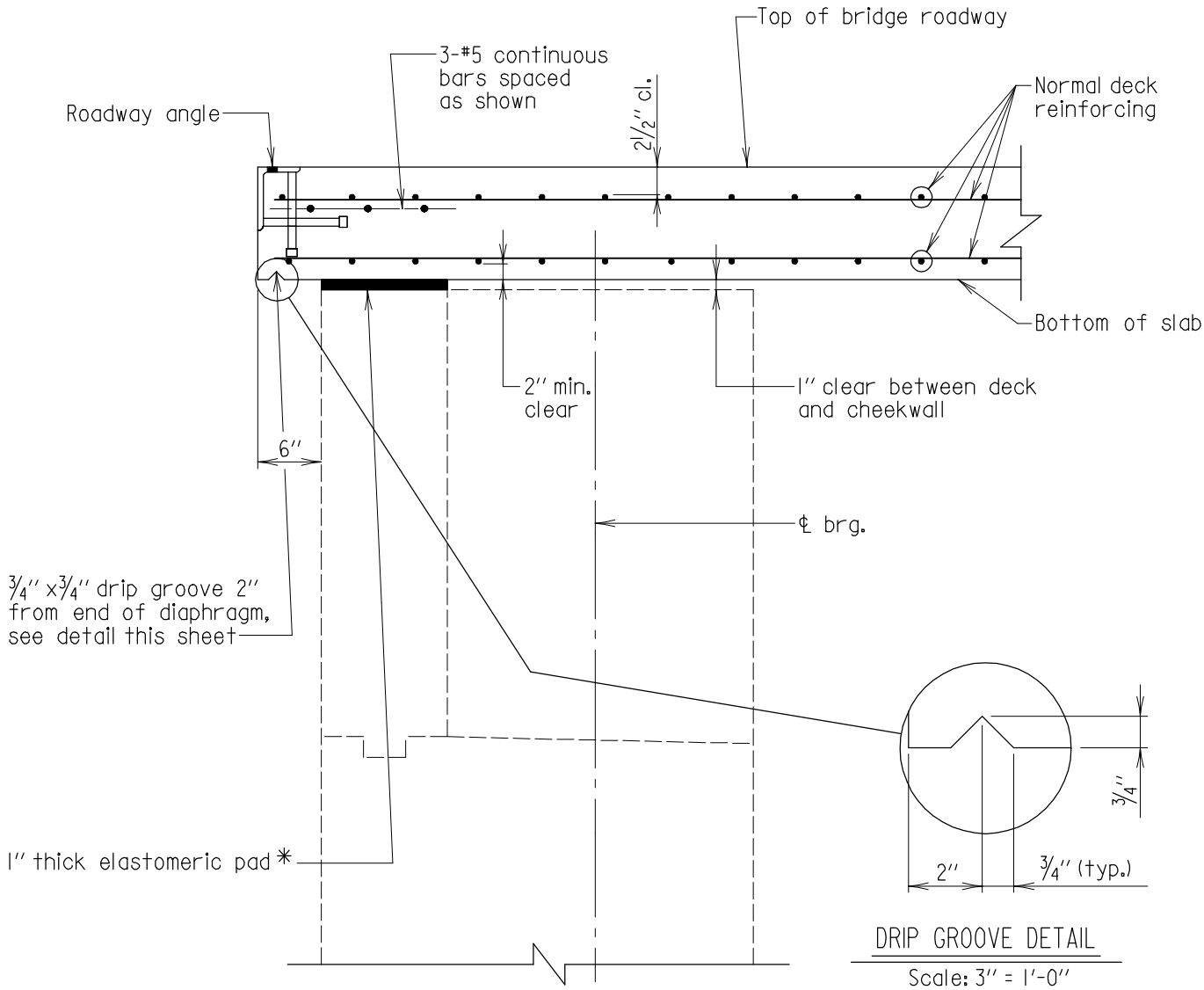

DRIP GROOVE DETAIL

Scale: 3'' = 1'-0''

SECTION B-B

Scale: 3/4'' = 1'-0''

* Note:
Elastomeric pad shall be attached to abutment backwall in accordance with the Section 432.03.04.

Note:
All reinforcing steel shown shall be epoxy coated.

APPROVAL	
E.S. Freedman DIRECTOR OFFICE OF STRUCTURES	
DATE: 6/26/13	
REVISIONS	
SHA	FHWA

FHWA APPROVAL
DATE:

STATE OF MARYLAND
DEPARTMENT OF TRANSPORTATION
STATE HIGHWAY ADMINISTRATION
OFFICE OF STRUCTURES

CONCRETE DIAPHRAGMS AT ABUTMENTS CARRYING STEEL GIRDERS WITH STEEL FIXED BEARINGS OR STEEL EXPANSION BEARINGS WITH LENGTHS CONTRIBUTING TO EXPANSION ≤ 70 FEET

STANDARD NO. SUP-BD(SG)-301 SHEET 4 OF 4

SUPER - BRIDGE DECK

OLD NO. BR-SS(6.66)-13-392

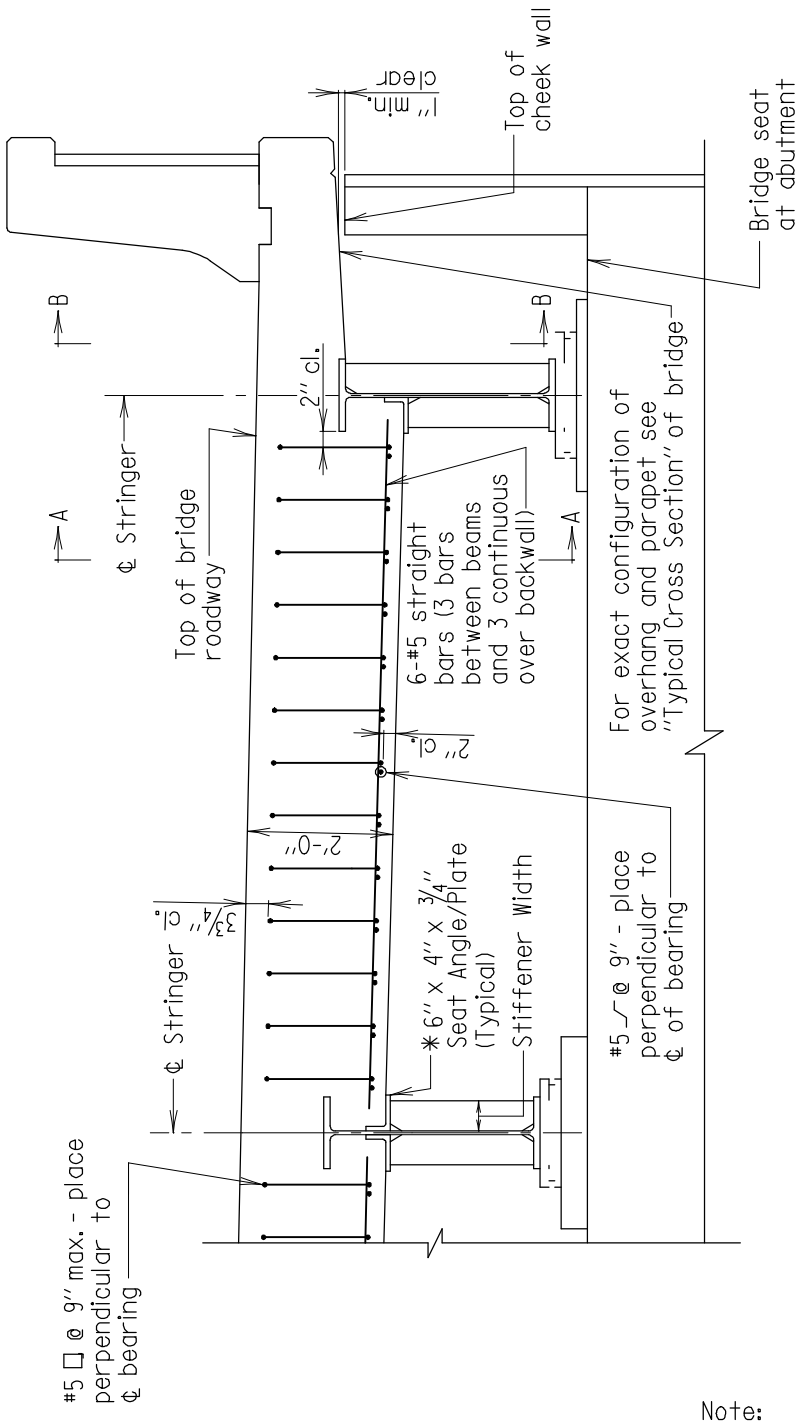

ELEVATION AT BRIDGE SEAT AREA OVER BEAMS

Scale: 3/8" = 1'-0"

Note:
Normal deck reinforcing not shown for clarity.

Notes:
1. For Section A-A see Sheet 3 of 4.
2. For Section B-B see Sheet 4 of 4.
3. * Longest leg of angle shall be increased as necessary so that angle exceeds stiffener width by at least 1/2". In lieu of the seat angle a 3/4" plate may be used. The plate shall be a minimum of 6" wide and shall exceed stiffener width by at least 1/2".

APPROVAL	
R.S. Freedman DIRECTOR OFFICE OF STRUCTURES	
DATE: 3/7/13	
REVISIONS	
SHA	FHWA
FHWA APPROVAL	
DATE:	

STATE OF MARYLAND
DEPARTMENT OF TRANSPORTATION
STATE HIGHWAY ADMINISTRATION
OFFICE OF STRUCTURES

CONCRETE DIAPHRAGMS AT ABUTMENTS CARRYING STEEL GIRDERS WITH STEEL EXPANSION BEARINGS WITH LENGTHS CONTRIBUTING TO EXPANSION > 70 FEET

STANDARD NO. SUP-BD(SG)-401 SHEET 1 OF 4

SUPER - BRIDGE DECK

OLD NO. BR-SS(6.67)-13-400

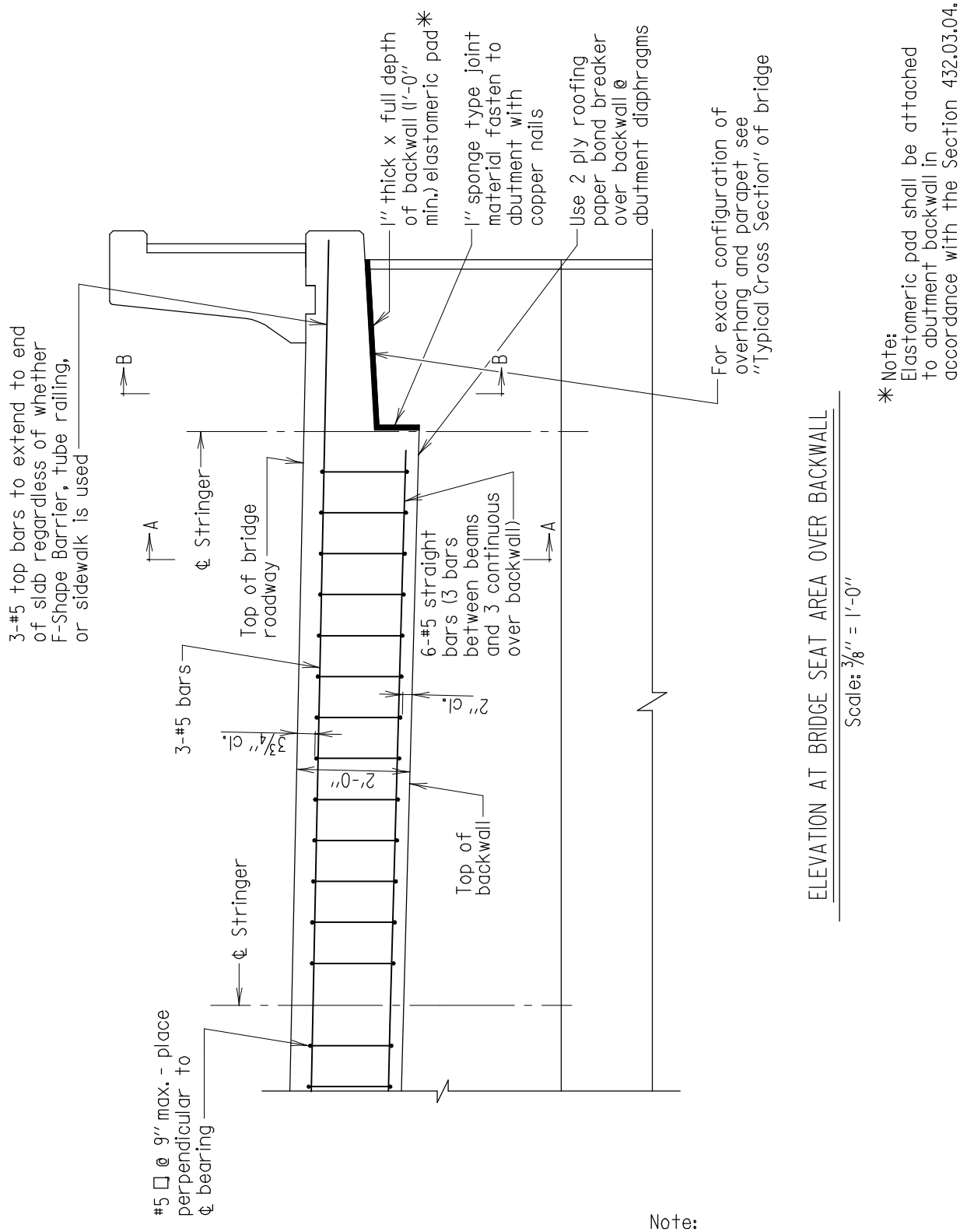

ELEVATION AT BRIDGE SEAT AREA OVER BACKWALL

Scale: 3/8" = 1'-0"

* Note:
Elastomeric pad shall be attached to abutment backwall in accordance with the Section 432.03.04.

Note:
Normal deck reinforcing not shown for clarity.

Notes:
1. For Section A-A see Sheet 3 of 4.
2. For Section B-B see Sheet 4 of 4.

APPROVAL	
R.S. Freedman DIRECTOR OFFICE OF STRUCTURES	
DATE: 3/7/13	
REVISIONS	
SHA	FHWA

FHWA APPROVAL
DATE:

STATE OF MARYLAND
DEPARTMENT OF TRANSPORTATION
STATE HIGHWAY ADMINISTRATION
OFFICE OF STRUCTURES

CONCRETE DIAPHRAGMS AT ABUTMENTS CARRYING STEEL GIRDERS WITH STEEL EXPANSION BEARINGS WITH LENGTHS CONTRIBUTING TO EXPANSION > 70 FEET

STANDARD NO. SUP-BD(SG)-401 SHEET 2 OF 4

SUPER - BRDGE DECK

OLD NO. BR-SS(6.67)-13-400

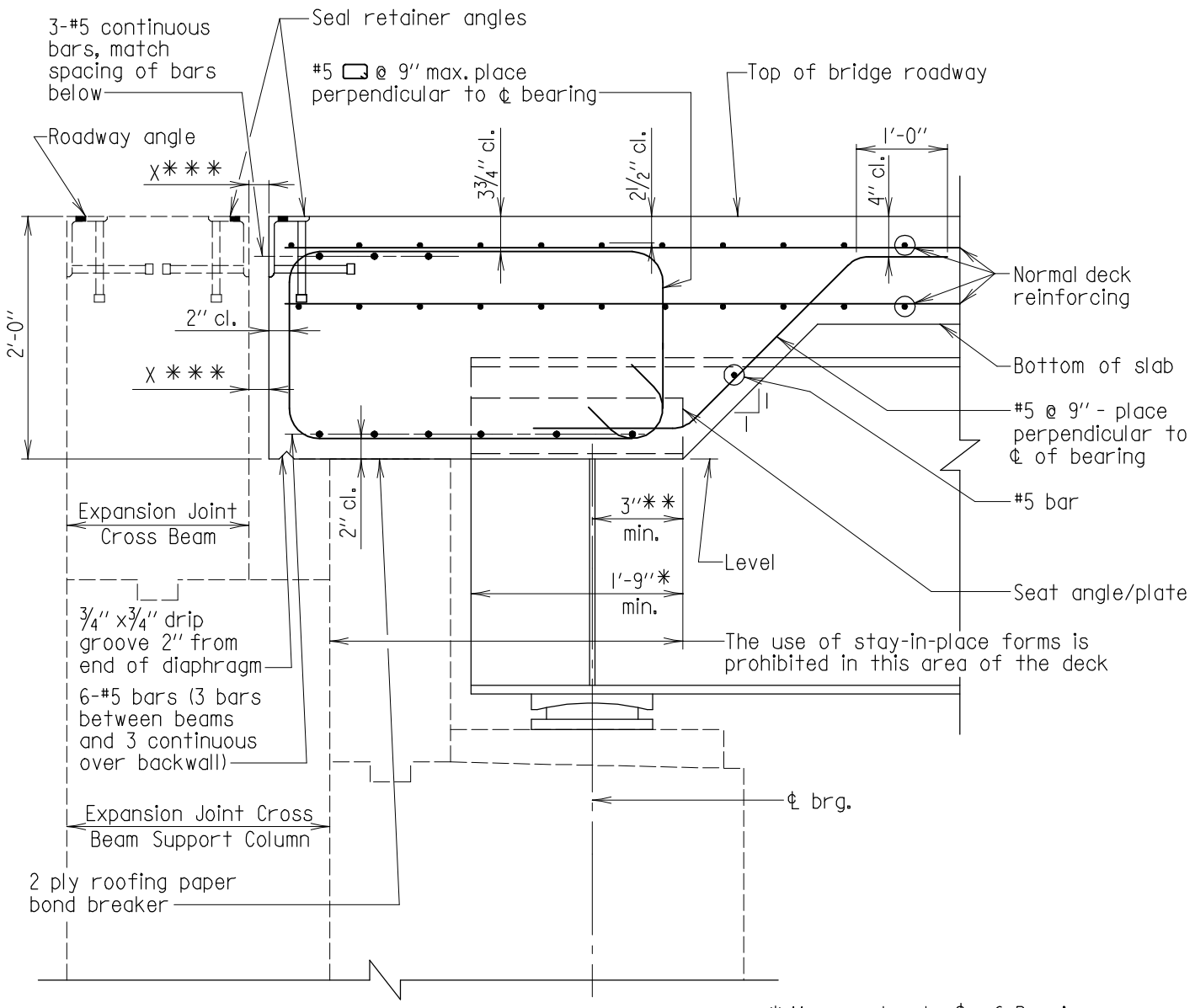

X*** = Joint opening dimension, see appropriate joint detail.

* Measured ⊥ to ℄ of Bearing.
** Measured ⊥ to ℄ of Bearing from Edge of Bearing Stiffener.

SECTION A-A

Scale: ¾" = 1'-0"

Note:
All reinforcing steel shown shall be epoxy coated.

APPROVAL	
E.S. Freedman DIRECTOR OFFICE OF STRUCTURES	
DATE: 3/7/13	
REVISIONS	
SHA	FHWA

FHWA APPROVAL
DATE:

STATE OF MARYLAND
DEPARTMENT OF TRANSPORTATION
STATE HIGHWAY ADMINISTRATION
OFFICE OF STRUCTURES

CONCRETE DIAPHRAGMS AT ABUTMENTS CARRYING STEEL GIRDERS WITH STEEL EXPANSION BEARINGS WITH LENGTHS CONTRIBUTING TO EXPANSION > 70 FEET

STANDARD NO. SUP-BD(SG)-401 SHEET 3 OF 4

SUPER - BRIDGE DECK

OLD NO. BR-SS(6.67)-13-400

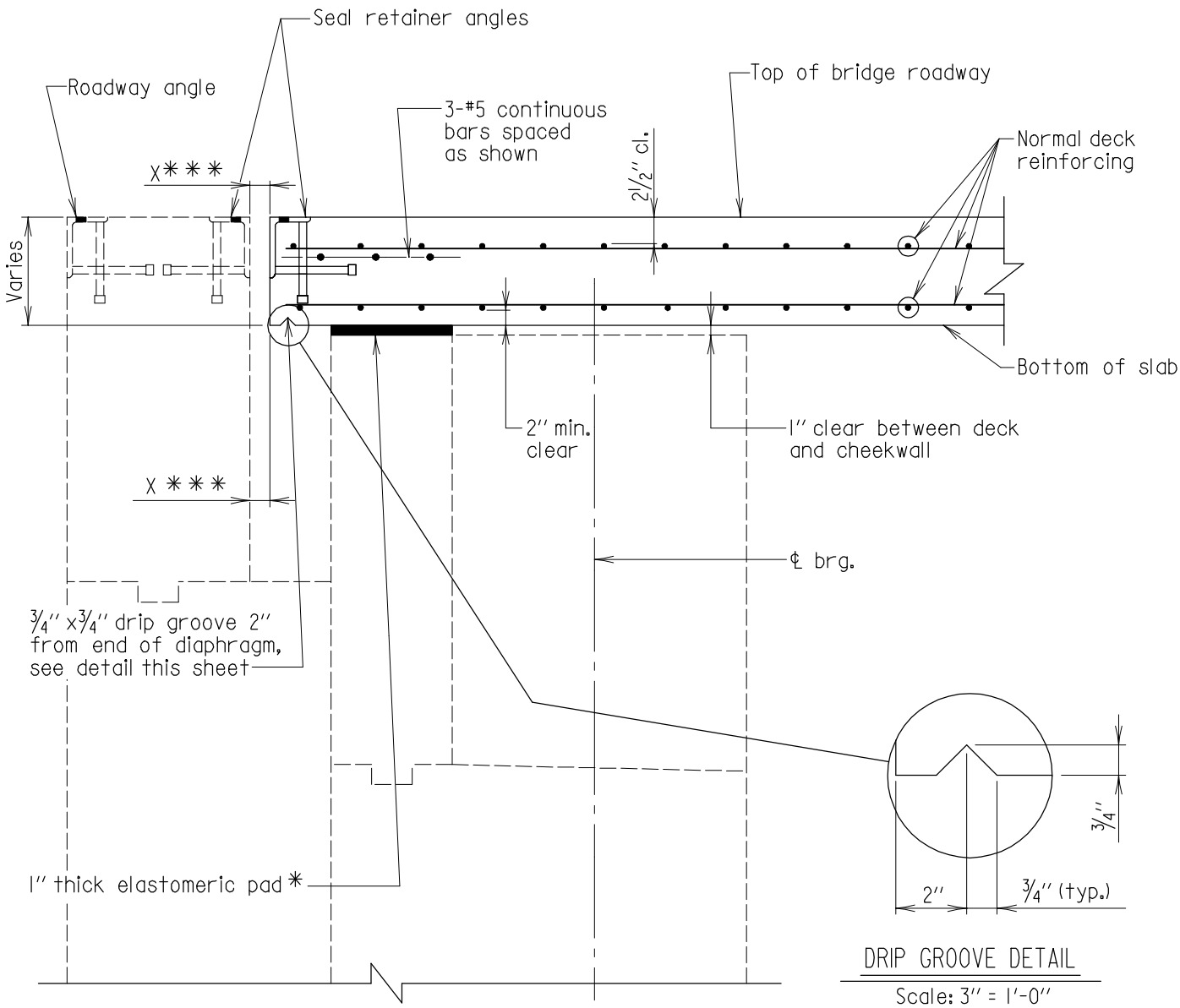

DRIP GROOVE DETAIL

Scale: 3'' = 1'-0''

SECTION B-B

Scale: 3/4'' = 1'-0''

* Note:
Elastomeric pad shall be attached to abutment backwall in accordance with the Section 432.03.04.

X*** = Joint opening dimension, see appropriate joint detail.

Note:
All reinforcing steel shown shall be epoxy coated.

APPROVAL	
E.S. Freedman DIRECTOR OFFICE OF STRUCTURES DATE: 3/7/13	
REVISIONS	
SHA	FHWA

FHWA APPROVAL
DATE:

STATE OF MARYLAND
DEPARTMENT OF TRANSPORTATION
STATE HIGHWAY ADMINISTRATION
OFFICE OF STRUCTURES

CONCRETE DIAPHRAGMS AT ABUTMENTS CARRYING STEEL GIRDERS WITH STEEL EXPANSION BEARINGS WITH LENGTHS CONTRIBUTING TO EXPANSION > 70 FEET

STANDARD NO. SUP-BD(SG)-401 SHEET 4 OF 4

SUPER - BRIDGE DECK

OLD NO. BR-SS(6.67)-13-400

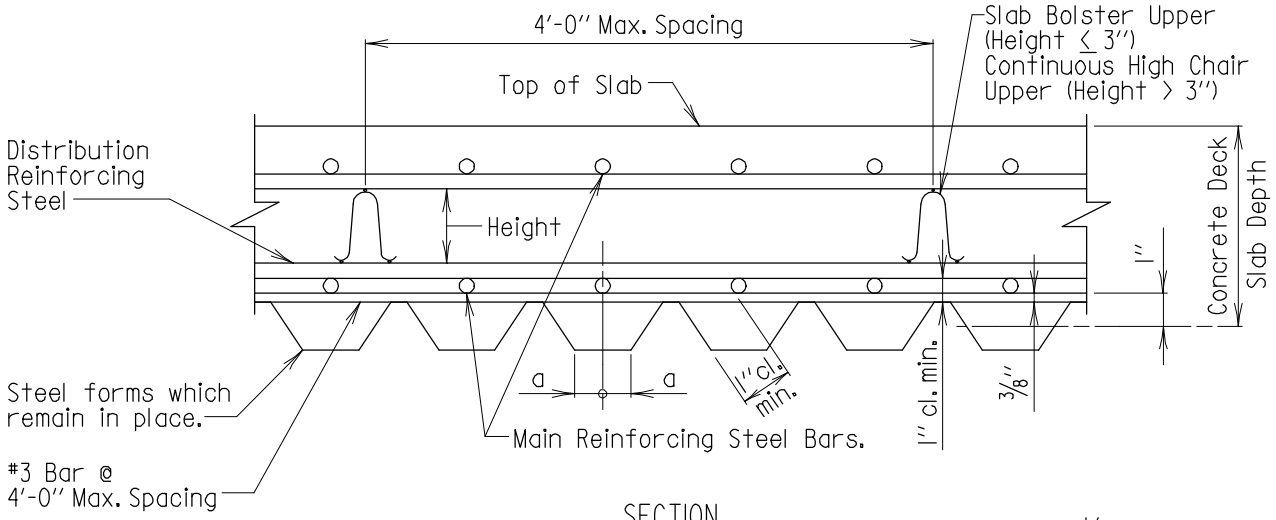

SECTION

Scale: None

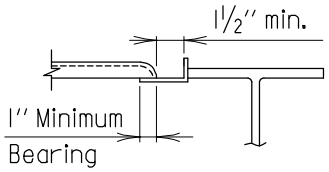

WHERE FORM IS BELOW
BOTTOM OF FLANGE
AND THERE ARE NO
SHEAR CONNECTORS

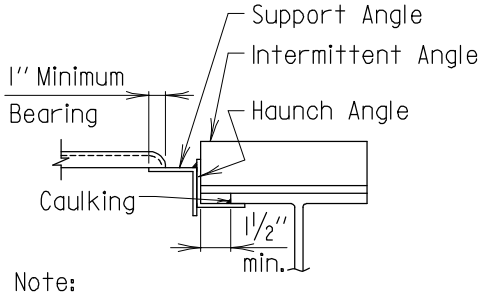

Note:
Alternate attachments will be considered, that provide the 1½" concrete encasement of top flange.

WHERE FORM IS ABOVE
BOTTOM OF FLANGE
AND THERE ARE NO
SHEAR CONNECTORS

Notes:

1. Permanent steel deck forms and supports shall conform to 909.11. Design Span shall be the clear distance between beam and/or girder flanges less two (2) inches.
2. No welding of these forms to parts carrying tension will be permitted. These forms shall be vertically adjusted to attain line and grade as required.
3. Any permanently exposed form metal where the galvanized coating has been damaged shall be thoroughly cleaned, wire brushed and painted with two coats of zinc-oxide dust primer, Federal Specification TT-P-641d, Type II, no color added, to the satisfaction of the engineer. Minor heat discoloration in areas of welds need not be touched up.
4. Contractor has option of using this detail or that shown on 2 of 2, except for bridge decks with curved stringers or bridge with a flared rebar pattern. For bridge with curved stringers or bridge with a flared rebar pattern only the detail shown on sheet 2 of 2 can be used.
5. Where shear connectors are utilized, normal manufacturers detailing may be utilized at stringer flange.
6. Supports for rebar shall be provided by Contractor.

APPROVAL	
E.S. Freedman DIRECTOR OFFICE OF STRUCTURES	
DATE: 9/8/76	
REVISIONS	
SHA	FHWA
8-30-90	
1-4-94	
1-22-01	
10-18-11	

FHWA APPROVAL	
DATE: 11-9-76	

STATE OF MARYLAND
DEPARTMENT OF TRANSPORTATION
STATE HIGHWAY ADMINISTRATION
OFFICE OF STRUCTURES

STEEL FORMS WHICH REMAIN IN PLACE
FOR CONCRETE SLABS ON STEEL STRINGERS
RE-BARS ALIGNED WITH TROUGH

STANDARD NO. SUP-BD(SG)-501 SHEET 1 OF 2

SUPER - BRIDGE DECK

OLD NO. BR-SS(6.06)-75-29

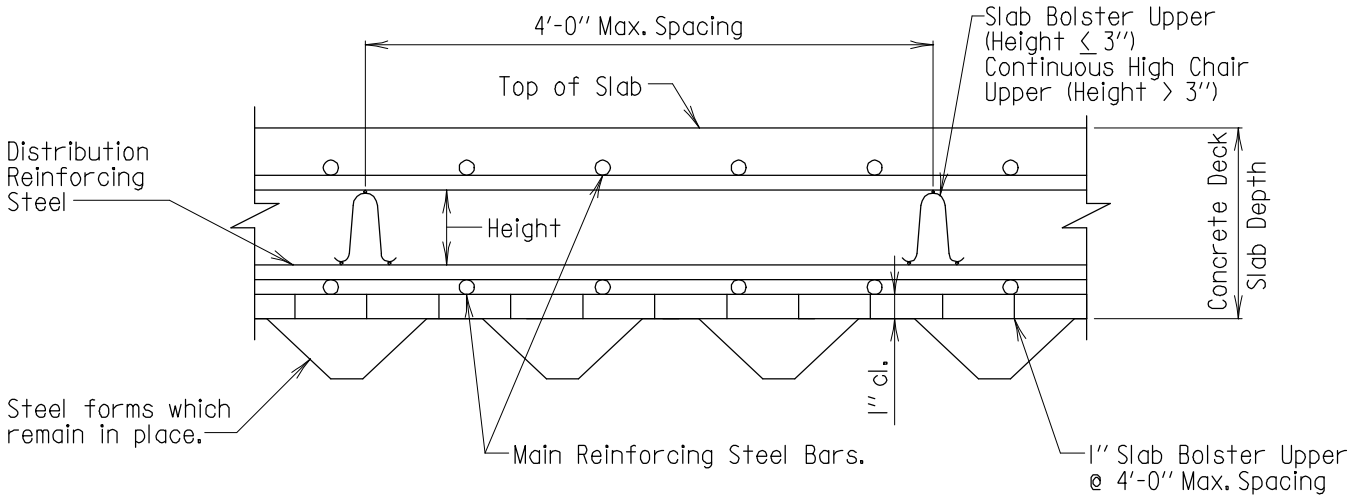

SECTION

Scale: None

Notes:

1. For notes see sheet 1 of 2.
2. This detail is acceptable only on structures where the General Notes under "Loading" states "and 15 pounds per square foot for use of steel bridge deck forms which remain in place."
3. Supports for rebar shall be provided by Contractor.

APPROVAL	
R.S. Freedman DIRECTOR OFFICE OF STRUCTURES	
DATE: 1/29/80	
REVISIONS	
SHA	FHWA
8-30-90	
11-18-04	
FHWA APPROVAL	
DATE: 6-20-80	

STATE OF MARYLAND
DEPARTMENT OF TRANSPORTATION
STATE HIGHWAY ADMINISTRATION
OFFICE OF STRUCTURES

STEEL FORMS WHICH REMAIN IN PLACE
FOR CONCRETE SLABS ON STEEL STRINGERS
RE-BARS INDEPENDENT WITH TROUGH

STANDARD NO. SUP-BD(SG)-501 SHEET 2 OF 2

SUPER - BRIDGE DECK

OLD NO. BR-SS(6.06)-75-29

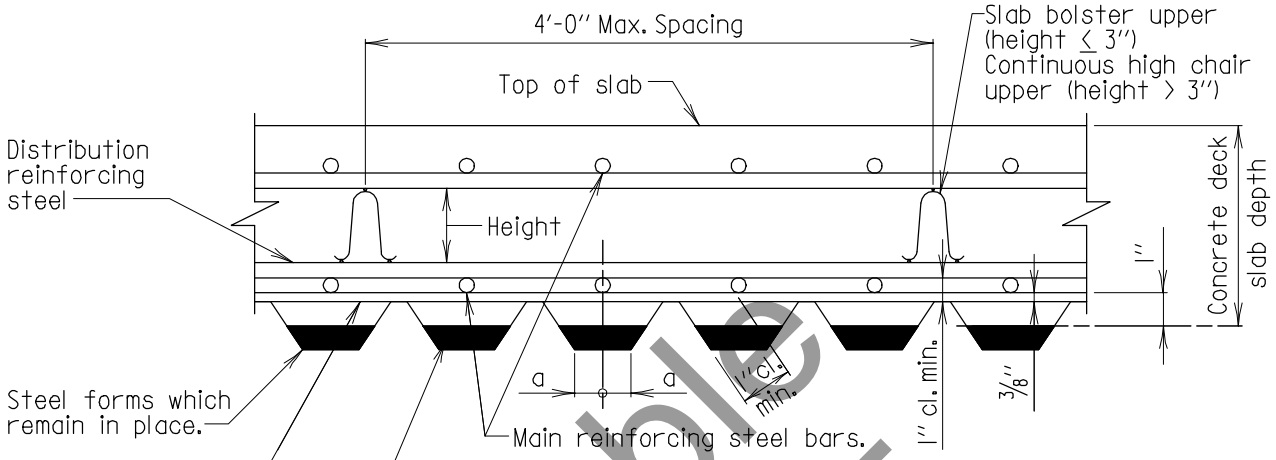

SECTION

Scale: None

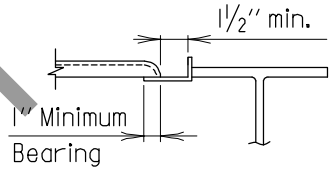

WHERE FORM IS BELOW BOTTOM OF FLANGE AND THERE ARE NO SHEAR CONNECTORS

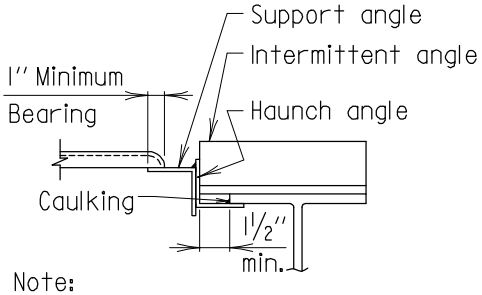

Note:
Alternate attachments will be considered, that provide the 1 1/2" concrete encasement of top flange.

WHERE FORM IS ABOVE BOTTOM OF FLANGE AND THERE ARE NO SHEAR CONNECTORS

Notes:

1. Permanent steel deck forms and supports shall conform to 909.10. Design Span shall be the clear distance between beam and/or girder flanges less two (2) inches.
2. No welding of these forms to parts carrying tension will be permitted. These forms shall be vertically adjusted to attain line and grade as required.
3. Any permanently exposed form metal where the galvanized coating has been damaged shall be thoroughly cleaned, wire brushed and painted with two coats of zinc-oxide dust primer, Federal Specification TT-P-641d, Type II, no color added, to the satisfaction of the engineer. Minor heat discoloration in areas of welds need not be touched up.
4. Contractor has option of using this detail or that shown on 2 of 2, except for bridge decks with curved stringers or bridge with a flared rebar pattern. For bridge with curved stringers or bridge with a flared rebar pattern only the detail shown on sheet 2 of 2 can be used.
5. Where shear connectors are utilized, normal manufacturers detailing may be utilized at stringer flange.
6. Supports for rebar shall be provided by Contractor.
7. When the General Notes under "Loading" indicates a design load with provisions for 3#/ft^2 for use of steel deck forms which remain in place, then this is the only detail that is acceptable if stay in place forms are to be used.

Usable DRAFT

* USEABLE DRAFT *

APPROVAL	
_____ DEPUTY CHIEF ENGR. BRIDGE DEVEL.	
DATE: 09/01/15	
REVISIONS	
SHA	FHWA
FHWA APPROVAL	
DATE:	

STATE OF MARYLAND
DEPARTMENT OF TRANSPORTATION
STATE HIGHWAY ADMINISTRATION
OFFICE OF BRIDGE DEVELOPMENT

LIGHTWEIGHT STEEL FORMS WHICH REMAIN IN PLACE FOR CONCRETE SLABS ON STEEL STRINGERS RE-BARS ALIGNED WITH TROUGH

NO. SUP-BD(SG)-502 SHEET 1 OF 2

SUPER - BRIDGE DECK

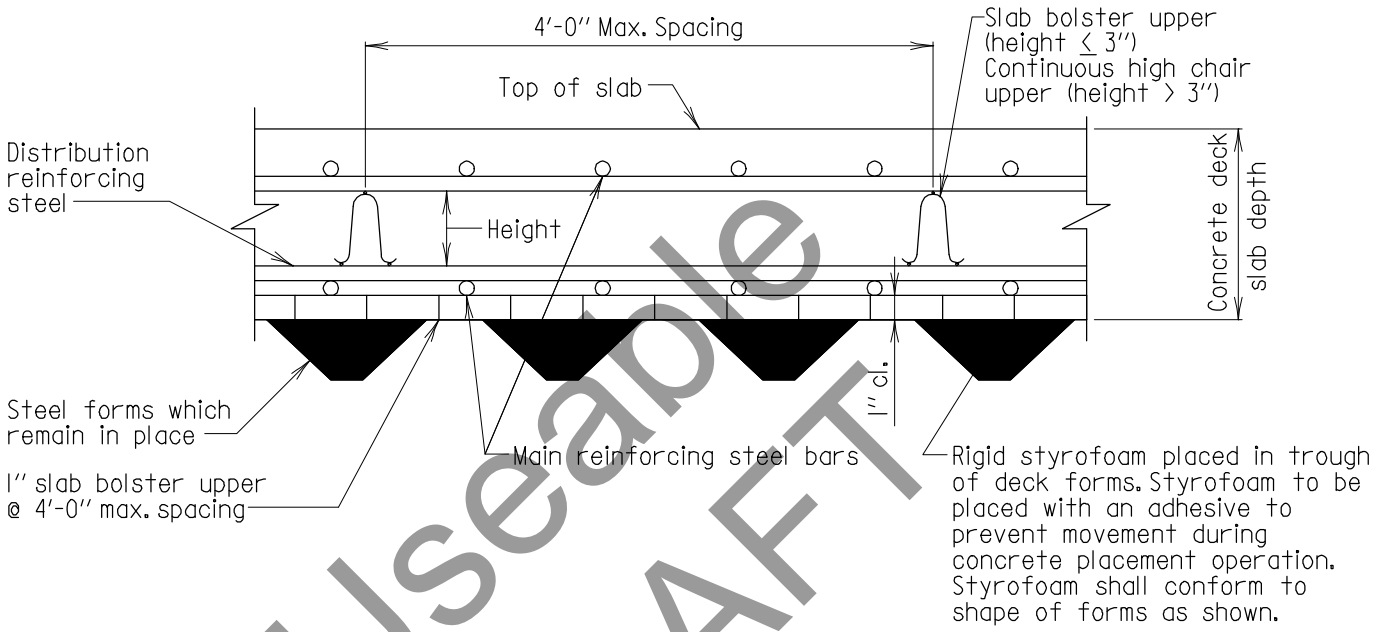

SECTION

Scale: None

Useable DRAFT

Notes:

1. For notes see sheet 1 of 2.
2. When the General Notes under "Loading" indicates a design load with provisions for 3#/ft^2 for use of steel deck forms which remain in place, then this is the only detail that is acceptable if stay in place forms are to be used.
3. Supports for rebar shall be provided by Contractor.

* USEABLE DRAFT *

APPROVAL	
_____ DEPUTY CHIEF ENGR. BRIDGE DEVEL.	
DATE: 09/01/15	
REVISIONS	
SHA	FHWA
FHWA APPROVAL	
DATE:	

STATE OF MARYLAND
DEPARTMENT OF TRANSPORTATION
STATE HIGHWAY ADMINISTRATION
OFFICE OF BRIDGE DEVELOPMENT

LIGHTWEIGHT STEEL FORMS WHICH REMAIN IN PLACE FOR CONCRETE SLABS ON STEEL STRINGERS RE-BARS INDEPENDENT WITH TROUGH

NO. SUP-BD(SG)-502 SHEET 2 OF 2

SUPER - BRIDGE DECK

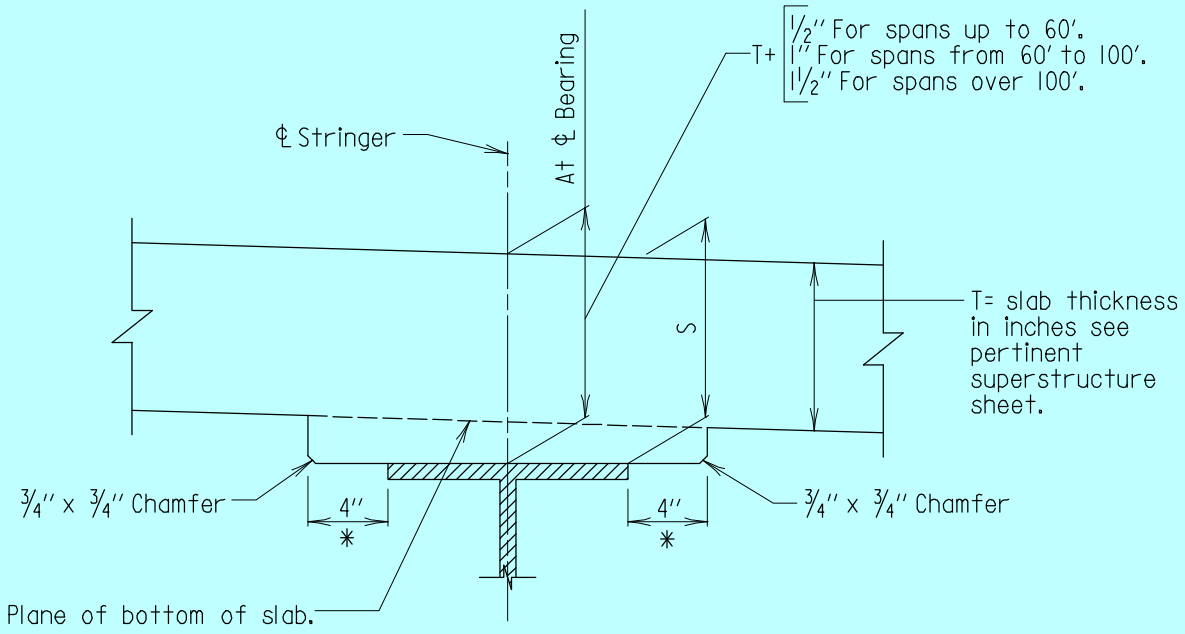

SECTION
Scale: None

Notes:

1. * Omit concrete haunch by dropping bottom of concrete slab to bottom of top flange on spans of 30'-0" or less c/c of bearings.
2. Dimension 'S' at either edge of stringer, for its full length, as shown above, must not be less than dimension 'T', therefore, check this dimension along both edges of stringers at each elevation point shown on "Bridge Deck Elevation" sheet prior to placing any form work. In determining the depth of haunch for continuous bridges the span length shall be considered to be the distance from the abutment support to the dead load contraflexure for end spans and between the contraflexure points for intermediate spans. Where cover plates and/or varying thicknesses of top flanges are utilized, this increase in depth shall be taken into account in determining the slab plus haunch thickness at ℄ of bearing.

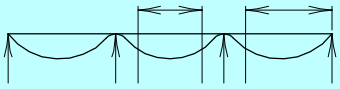

* FOR OFFICE USE ONLY *

APPROVAL	
R.S. Freedman DIRECTOR OFFICE OF STRUCTURES DATE: 2/18/76	
REVISIONS	
SHA	FHWA
5-14-76	10-3-80

FHWA APPROVAL
DATE: 8-24-76

STATE OF MARYLAND
DEPARTMENT OF TRANSPORTATION
STATE HIGHWAY ADMINISTRATION
OFFICE OF STRUCTURES

CONCRETE HAUNCH DETAIL
DECKS FORMED WITH TIMBER

STANDARD NO. SUP-BD(SG)-601 SHEET 1 OF 1

SUPER - BRIDGE DECK

OLD NO. BR-SS(6.05)-75-19

SUPERSTRUCTURE

BRIDGE DECK

on CONCRETE GIRDERS

(SUP-BD(CG))

NOTES

Design:

1. Latest AASHTO LRFD Bridge Design Specifications.
2. f'c = 4000 p.s.i.
3. Design includes provision for 2" future wearing surface.

General:

1. Transverse bars shall be placed normal to centerline girders.
2. When skew angles are greater than 60° then Contractor may use either reinforcing steel pattern no.1 or no.2 throughout bridge.
3. When the girder spacing is less than 7'-0", all bars shall be straight top and bottom. No truss bars are to be used.
4. Typical sections shall include a minimum of three stringers and have a width of not less than 14.0' between centerlines of exterior stringers.
5. Overhangs shall be at least 21" but shall not exceed the smaller of 0.625 times the stringer spacing and 6.0'.
6. Reinforcing in the slab overhangs shall be designed in accordance with AASHTO.
7. Standard bridge deck slabs should not be used for girder spacings less than 6'-0". For girder spacings between 6'-0" to 7'-0", clear spacing between additional longitudinal steel over piers should be checked. A minimum of 3" clearance between longitudinal bars shall be maintained.
8. All reinforcing steel in the deck slabs shall be epoxy coated.
9. The bridge deck slab details are for PCEF Bulb Tees with a top flange width of 4'-0" only.

Useable DRAFT

* USEABLE DRAFT *

APPROVAL	
_____ DIRECTOR OFFICE OF STRUCTURES DATE: 09/01/15	
REVISIONS	
SHA	FHWA
FHWA APPROVAL	
DATE:	

STATE OF MARYLAND
DEPARTMENT OF TRANSPORTATION
STATE HIGHWAY ADMINISTRATION
OFFICE OF STRUCTURES

VERIFIED 1-24-12 LRFD

BRIDGE DECK SLAB FOR PCEF BULB TEE
PRESTRESSED CONCRETE GIRDERS
GENERAL NOTES AND BAR SPACING

NO. SUP-BD(CG)-101 SHEET 1 OF 2

SUPER - BRDGE DECK

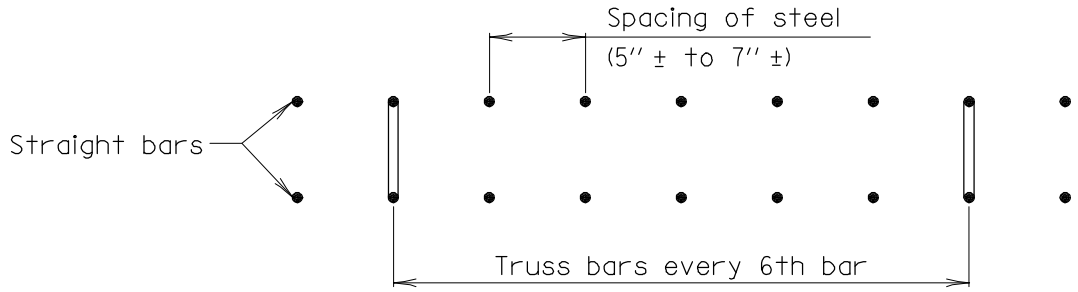

REINFORCING STEEL PATTERN NO.1

*See General Note 1 on sheet 1 of 2

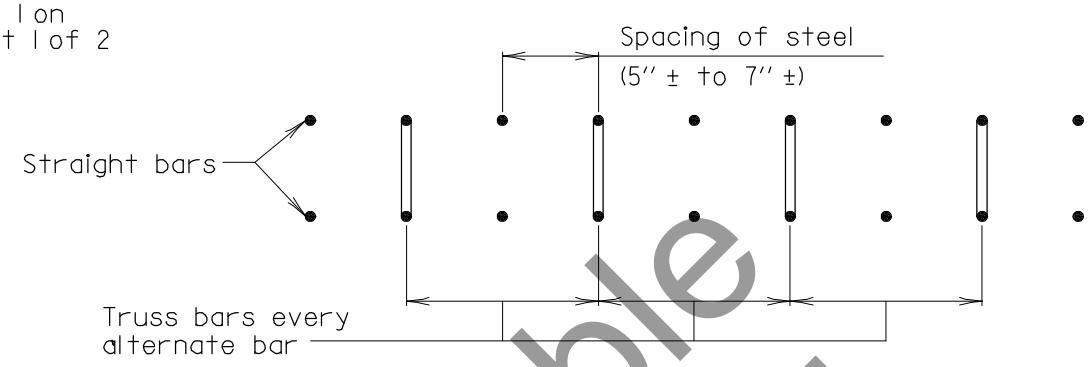

REINFORCING STEEL PATTERN NO.2

1. The Contractor has the option of using reinforcing steel pattern no.1 or no.2 in the unhatched portions of the decks shown below.
2. The Contractor shall use only reinforcing steel pattern no.1 in the hatched portions of the decks shown below.

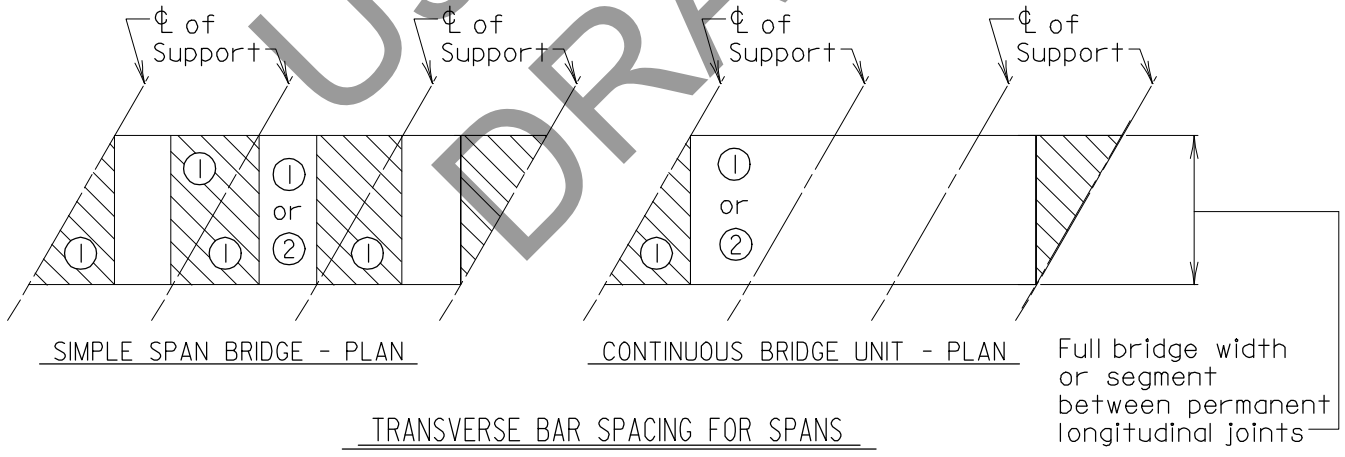

SIMPLE SPAN BRIDGE - PLAN

CONTINUOUS BRIDGE UNIT - PLAN

TRANSVERSE BAR SPACING FOR SPANS WITH SKEW ANGLES LESS THAN 60°

Scale: 1''=1'-0''

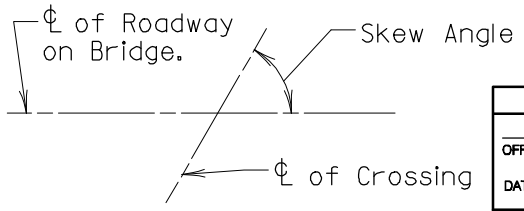

SKEW ANGLE

Scale: None

Useable DRAFT

* USEABLE DRAFT *

APPROVAL	
_____ DIRECTOR OFFICE OF STRUCTURES DATE: 09/01/15	
REVISIONS	
SHA	FHWA

FHWA APPROVAL
DATE:

STATE OF MARYLAND
DEPARTMENT OF TRANSPORTATION
STATE HIGHWAY ADMINISTRATION
OFFICE OF STRUCTURES

VERIFIED 1-24-12 LRFD

BRIDGE DECK SLAB FOR CONCRETE GIRDERS
GENERAL NOTES AND BAR SPACING

NO. SUB-BD(CG)-101 SHEET 2 OF 2

SUPER - BRIDGE DECK

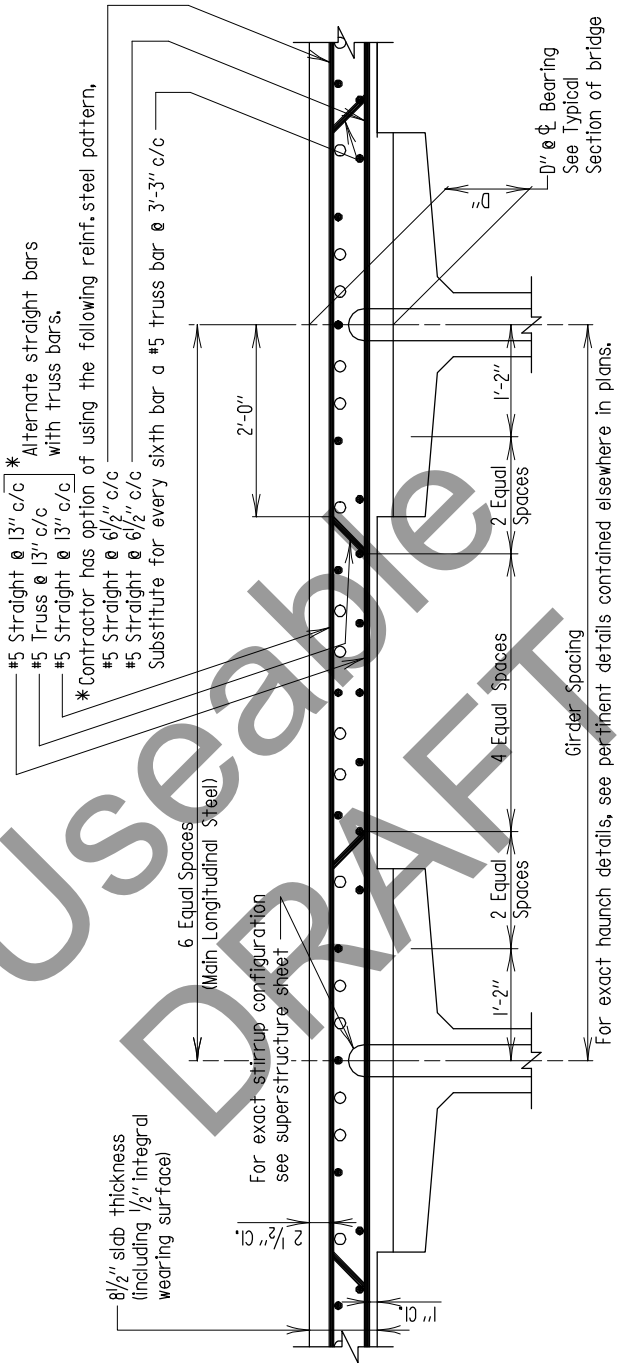

HL-93 TYPE XLI SLAB

GREATER THAN 7'-0" TO 8'-0" GIRDER SPACING

Scale: ½"=1'-0"

Note:
For girder spacing less than 7'-0" see Note 3 on Std. No. SUP-BD(CG)-101.

Note:
Slanted lettering indicates notes "For Office Use Only".

Useable DRAFT

Note:
1. All steel sizes and spacing based on ASTM A-615, Grade 60.
2. Transverse bars to be placed normal to center line of girderss.
3. All longitudinal bars are to be #5's placed as shown except as indicated by Note 4.
4. On continuous bridges, over piers, additional longitudinal steel to be added to the top of the slab between normal bars and indicated thus ○. See Detail No. SUP-BD(CG)-201 for the size and lengths of these additional bars.
5. *Refer to SUP-BD(CG)-101 for overhang design requirements.*

APPROVAL	
_____ DIRECTOR OFFICE OF STRUCTURES	
DATE: 09/01/15	
REVISIONS	
SHA	FHWA

FHWA APPROVAL
DATE:

* USEABLE DRAFT *

STATE OF MARYLAND
DEPARTMENT OF TRANSPORTATION
STATE HIGHWAY ADMINISTRATION
OFFICE OF STRUCTURES

VERIFIED 1-24-12 LRFD

TYPE XLI BRIDGE DECK SLABS FOR
PCEF BULB TEE PRESTRESSED CONCRETE GIRDERS
HL-93 LOADING

NO. SUP-BD(CG)-102 SHEET 1 OF 1

SUPER - BRIDGE DECK

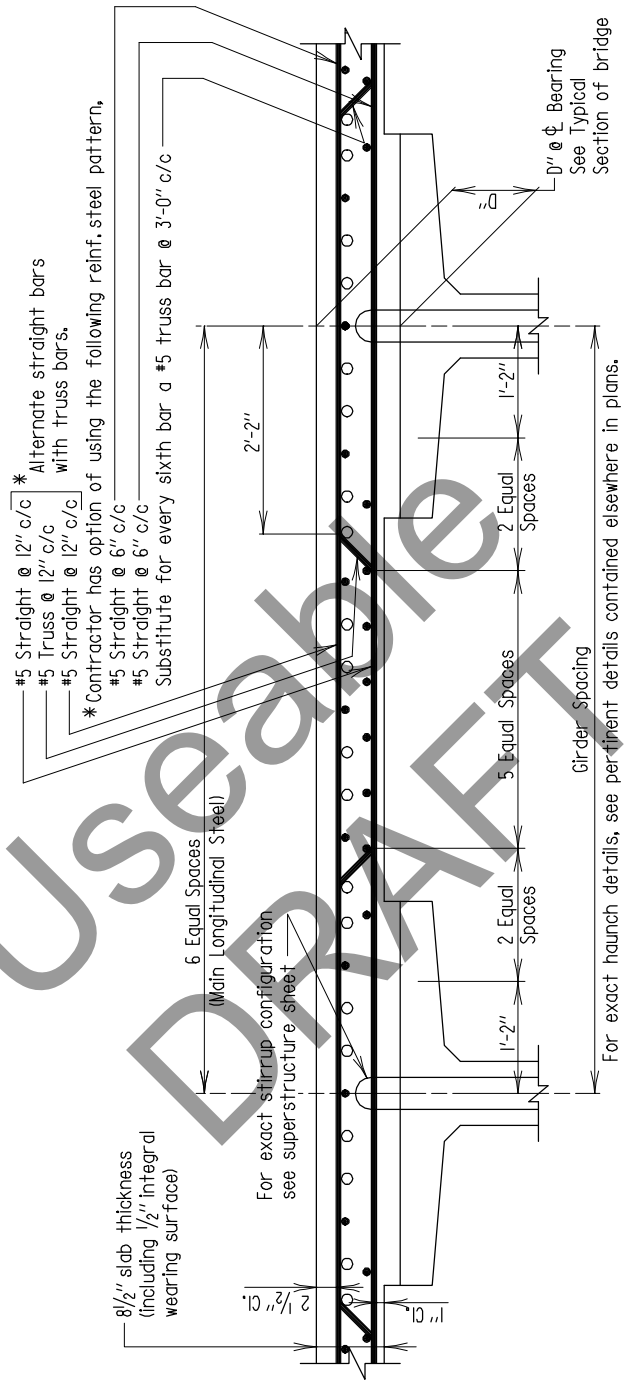

HL-93 TYPE XLII SLAB
GREATER THAN 8'-0" TO 8'-6" GIRDER SPACING
Scale: 1/2"=1'-0"

Useable DRAFT

Note:
Slanted lettering indicates notes "For Office Use Only".

Note:
1. All steel sizes and spacing based on ASTM A-615, Grade 60.
2. Transverse bars to be placed normal to center line of girderss.
3. All longitudinal bars are to be #5's placed as shown except as indicated by Note 4.
4. On continuous bridges, over piers, additional longitudinal steel to be added to the top of the slab between normal bars and indicated thus ○. See Detail No. SUP-BD(CG)-201 for the size and lengths of these additional bars.
5. *Refer to SUP-BD(CG0-101 for overhang design requirements.*

FHWA APPROVAL	
DATE:	

APPROVAL
_____ DIRECTOR OFFICE OF STRUCTURES
DATE: 09/01/15

REVISIONS	
SHA	FHWA

* USEABLE DRAFT *

STATE OF MARYLAND
DEPARTMENT OF TRANSPORTATION
STATE HIGHWAY ADMINISTRATION
OFFICE OF STRUCTURES

VERIFIED 1-24-12 LRFD

TYPE XLII BRIDGE DECK SLABS FOR
PCEF BULB TEE PRESTRESSED CONCRETE GIRDERS
HL-93 LOADING

NO. SUP-BD(CG)-103 SHEET 1 OF 1

SUPER - BRIDGE DECK

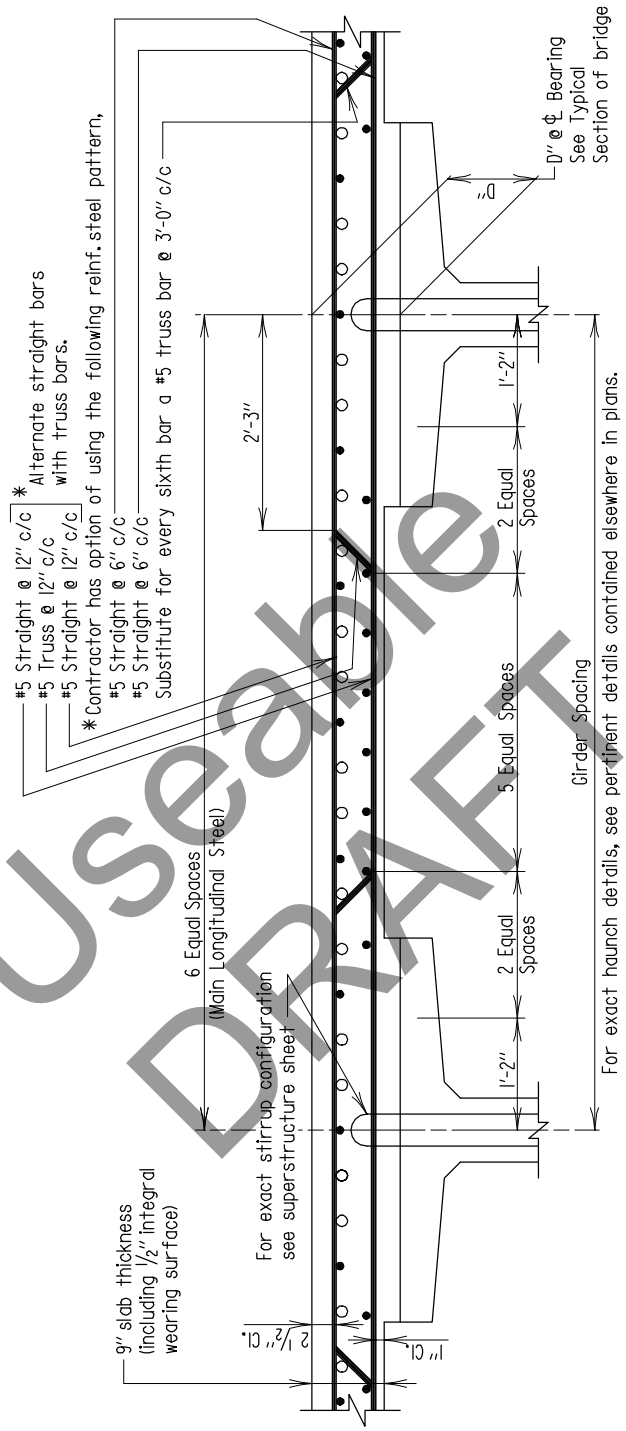

HL-93 TYPE XLIII SLAB

GREATER THAN 8'-6" TO 9'-0" GIRDER SPACING

Scale: 1/2"=1'-0"

Note:
Slanted lettering indicates notes "For Office Use Only".

Useable DRAFT

Note:
1. All steel sizes and spacing based on ASTM A-615, Grade 60.
2. Transverse bars to be placed normal to center line of girderss.
3. All longitudinal bars are to be #5's placed as shown except as indicated by Note 4.
4. On continuous bridges, over piers, additional longitudinal steel to be added to the top of the slab between normal bars and indicated thus ○. See Detail No. SUP-BD(CG)-201 for the size and lengths of these additional bars.
5. *Refer to SUP-BD(CG)-101 for overhang design requirements.*

FHWA APPROVAL
DATE:

APPROVAL
_____ DIRECTOR OFFICE OF STRUCTURES
DATE: 09/01/15

REVISIONS	
SHA	FHWA

* USEABLE DRAFT *

STATE OF MARYLAND
DEPARTMENT OF TRANSPORTATION
STATE HIGHWAY ADMINISTRATION
OFFICE OF STRUCTURES

VERIFIED 1-24-12 LRFD

TYPE XLIII BRIDGE DECK SLABS FOR
PCEF BULB TEE PRESTRESSED CONCRETE GIRDERS
HL-93 LOADING

NO. SUP-BD(CG)-104 SHEET 1 OF 1

SUPER - BRIDGE DECK

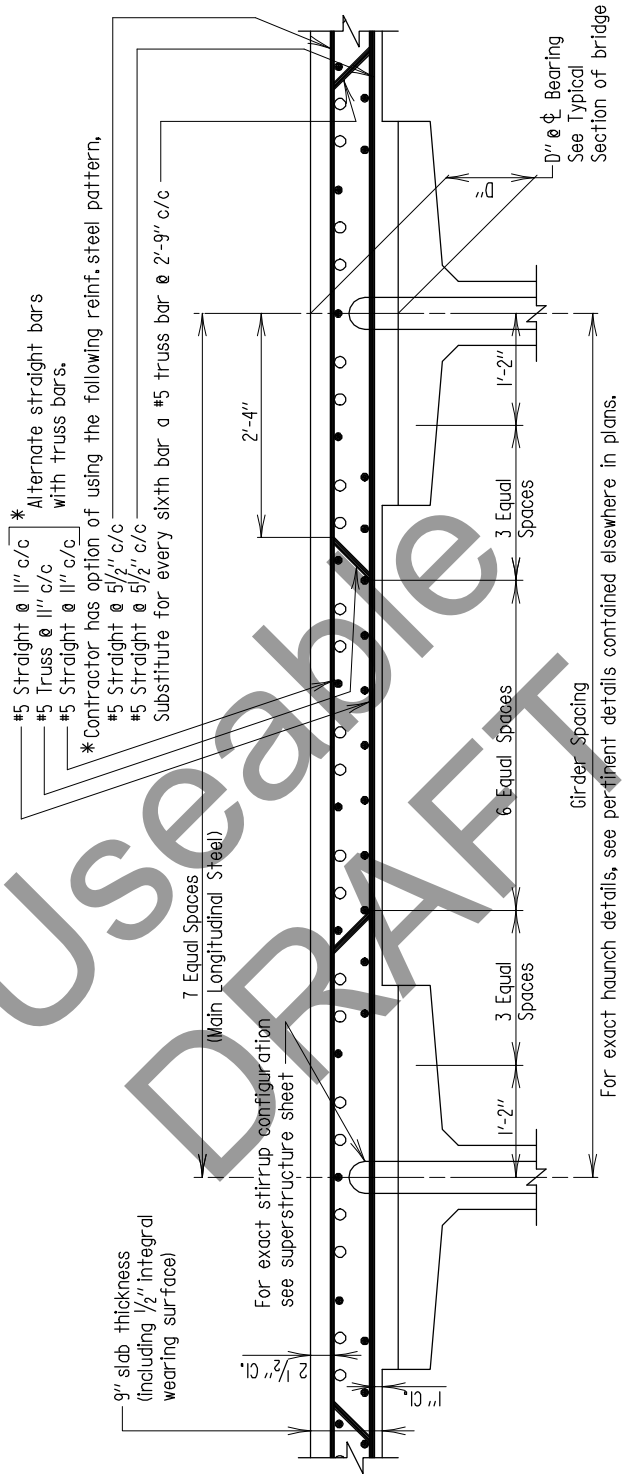

HL-93 TYPE XLIV SLAB
GREATER THAN 9'-0" TO 9'-6" GIRDER SPACING
Scale: ½"=1'-0"

Note:
Slanted lettering indicates notes "For Office Use Only".

Useable DRAFT

Note:
1. All steel sizes and spacing based on ASTM A-615, Grade 60.
2. Transverse bars to be placed normal to center line of girderss.
3. All longitudinal bars are to be #5's placed as shown except as indicated by Note 4.
4. On continuous bridges, over piers, additional longitudinal steel to be added to the top of the slab between normal bars and indicated thus ○. See Detail No. SUP-BD(CG)-201 for the size and lengths of these additional bars.
5. *Refer to SUP-BD(CG)-101 for overhang design requirements.*

FHWA APPROVAL	
DATE:	

APPROVAL
_____ DIRECTOR OFFICE OF STRUCTURES
DATE: 09/01/15

REVISIONS	
SHA	FHWA

* USEABLE DRAFT *

STATE OF MARYLAND
DEPARTMENT OF TRANSPORTATION
STATE HIGHWAY ADMINISTRATION
OFFICE OF STRUCTURES

VERIFIED 1-24-12 LRFD

TYPE XLIV BRIDGE DECK SLABS FOR
PCEF BULB TEE PRESTRESSED CONCRETE GIRDERS
HL-93 LOADING

NO. SUP-BD(CG)-105 SHEET 1 OF 1

SUPER - BRIDGE DECK

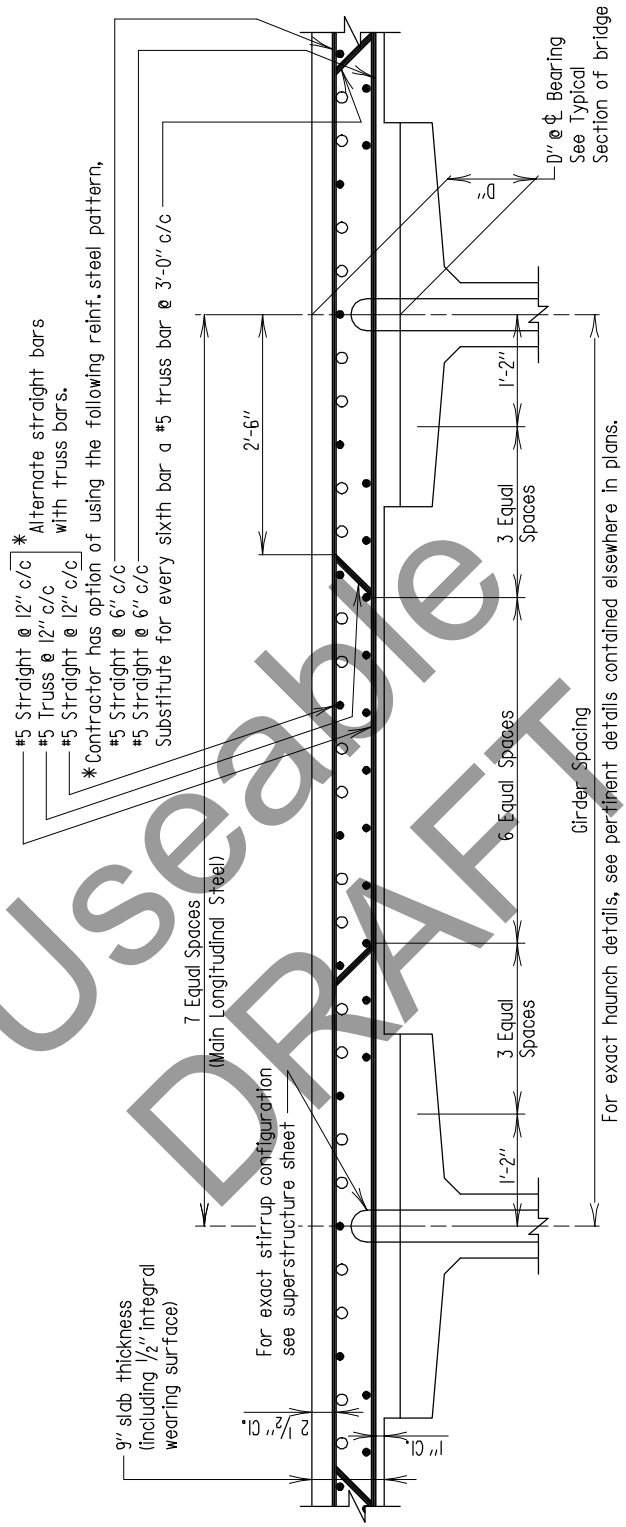

HL-93 TYPE XLV SLAB

GREATER THAN 9'-6" TO 10'-0" GIRDER SPACING

Scale: 1/2"=1'-0"

Useable DRAFT

Note:
Slanted lettering indicates notes "For Office Use Only".

Note:
1. All steel sizes and spacing based on ASTM A-615, Grade 60.
2. Transverse bars to be placed normal to center line of girderss.
3. All longitudinal bars are to be #5's placed as shown except as indicated by Note 4.
4. On continuous bridges, over piers, additional longitudinal steel to be added to the top of the slab between normal bars and indicated thus ○. See Detail No. SUP-BD(CG)-201 for the size and lengths of these additional bars.
5. *Refer to SUP-BD(CG)-101 for overhang design requirements.*

FHWA APPROVAL
DATE:

APPROVAL
_____ DIRECTOR OFFICE OF STRUCTURES
DATE: 09/01/15

REVISIONS	
SHA	FHWA

* USEABLE DRAFT *

STATE OF MARYLAND
DEPARTMENT OF TRANSPORTATION
STATE HIGHWAY ADMINISTRATION
OFFICE OF STRUCTURES

VERIFIED 1-24-12 LRFD

TYPE XLV BRIDGE DECK SLABS FOR
PCEF BULB TEE PRESTRESSED CONCRETE GIRDERS
HL-93 LOADING

NO. SUP-BD(CG)-106 SHEET 1 OF 1

SUPER - BRIDGE DECK

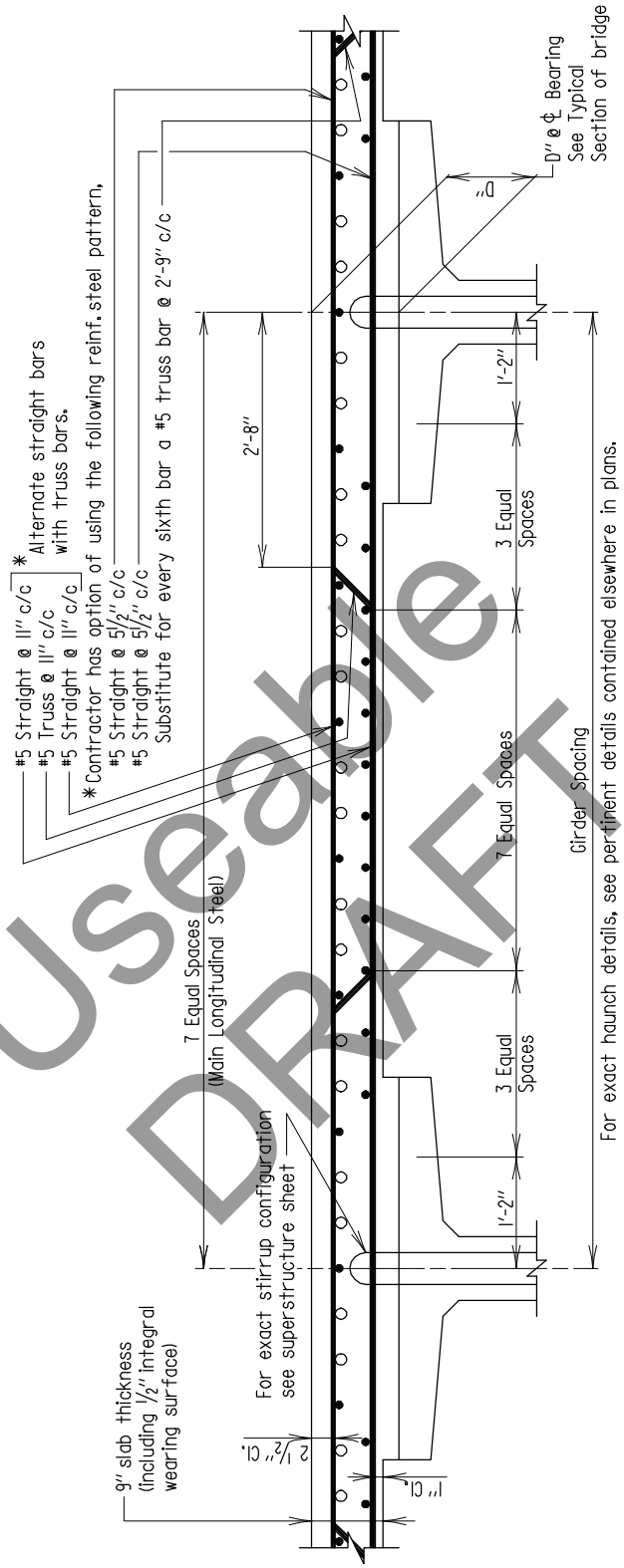

HL-93 TYPE XLVI SLAB

GREATER THAN 10'-0" TO 10'-6" GIRDER SPACING

Scale: ½"=1'-0"

Note:
Slanted lettering indicates notes "For Office Use Only".

Useable DRAFT

Note:
1. All steel sizes and spacing based on ASTM A-615, Grade 60.
2. Transverse bars to be placed normal to center line of girderss.
3. All longitudinal bars are to be #5's placed as shown except as indicated by Note 4.
4. On continuous bridges, over piers, additional longitudinal steel to be added to the top of the slab between normal bars and indicated thus ○. See Detail No. SUP-BD(CG)-201 for the size and lengths of these additional bars.
5. *Refer to SUP-BD(CG)-101 for overhang design requirements.*

FHWA APPROVAL	
DATE:	

APPROVAL
_____ DIRECTOR OFFICE OF STRUCTURES
DATE: 09/01/15

REVISIONS	
SHA	FHWA

* USEABLE DRAFT *

STATE OF MARYLAND
DEPARTMENT OF TRANSPORTATION
STATE HIGHWAY ADMINISTRATION
OFFICE OF STRUCTURES

VERIFIED 1-24-12 LRFD

TYPE XLVI BRIDGE DECK SLABS FOR
PCEF BULB TEE PRESTRESSED CONCRETE GIRDERS
HL-93 LOADING

NO. SUP-BD(CG)-107 SHEET 1 OF 1

SUPER - BRIDGE DECK

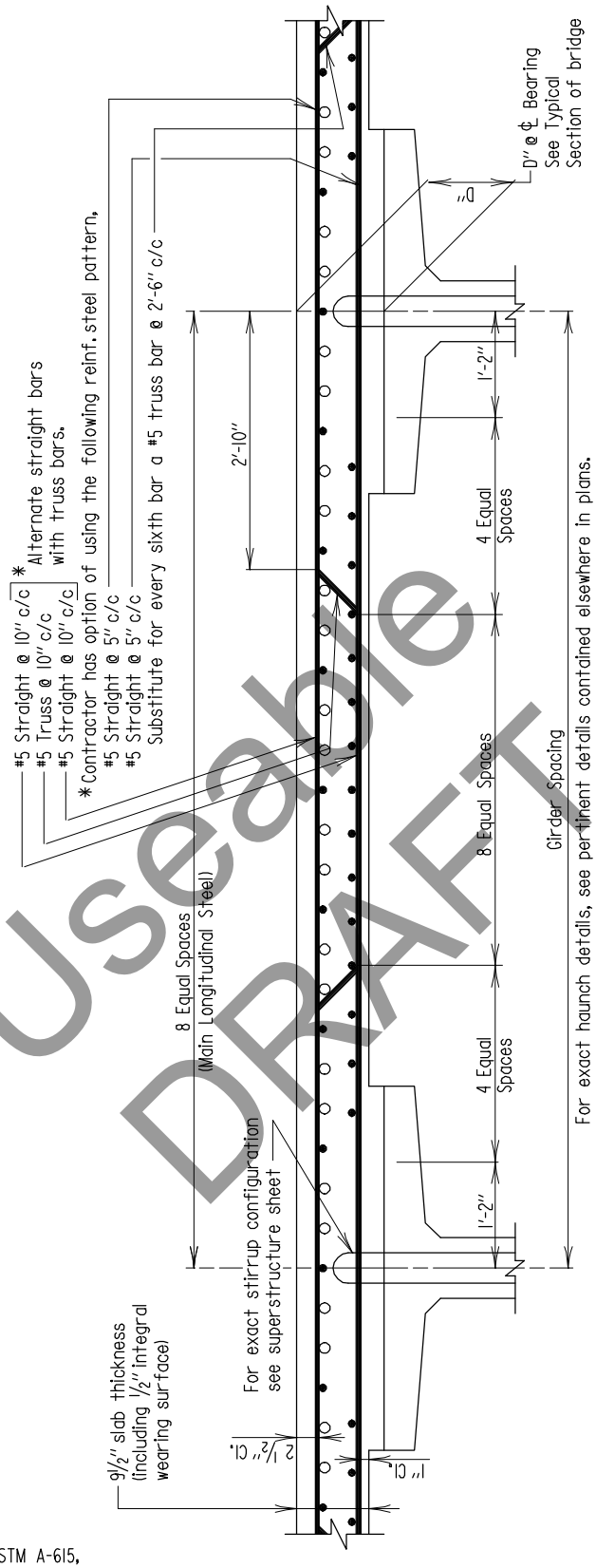

HL-93 TYPE XLVII SLAB

GREATER THAN 10'-6" TO 11'-0" GIRDER SPACING

Scale: 1/2"=1'-0"

Note:
Slanted lettering indicates notes "For Office Use Only".

Useable DRAFT

Note:
1. All steel sizes and spacing based on ASTM A-615, Grade 60.
2. Transverse bars to be placed normal to center line of girderss.
3. All longitudinal bars are to be #5's placed as shown except as indicated by Note 4.
4. On continuous bridges, over piers, additional longitudinal steel to be added to the top of the slab between normal bars and indicated thus ○. See Detail No. SUP-BD(CG)-201 for the size and lengths of these additional bars.
5. *Refer to SUP-BD(CG)-101 for overhang design requirements.*

APPROVAL	
_____ DIRECTOR OFFICE OF STRUCTURES	
DATE: 09/01/15	
REVISIONS	
SHA	FHWA

FHWA APPROVAL
DATE:

* USEABLE DRAFT *

STATE OF MARYLAND
DEPARTMENT OF TRANSPORTATION
STATE HIGHWAY ADMINISTRATION
OFFICE OF STRUCTURES

VERIFIED 1-24-12 LRFD

TYPE XLVII BRIDGE DECK SLABS FOR
PCEF BULB TEE PRESTRESSED CONCRETE GIRDERS
HL-93 LOADING

NO. SUP-BD(CG)-108 SHEET 1 OF 1

SUPER - BRIDGE DECK

Useable DRAFT

Note:
Slanted lettering indicates notes "For Office Use Only".

Note:
1. All steel sizes and spacing based on ASTM A-615, Grade 60.
2. Transverse bars to be placed normal to center line of girderss.
3. All longitudinal bars are to be #5's placed as shown except as indicated by Note 4.
4. On continuous bridges, over piers, additional longitudinal steel to be added to the top of the slab between normal bars and indicated thus ○. See Detail No. SUP-BD(CG)-201 for the size and lengths of these additional bars.
5. *Refer to SUP-BD(CG)-101 for overhang design requirements.*

FHWA APPROVAL	
DATE:	

APPROVAL
_____ DIRECTOR OFFICE OF STRUCTURES
DATE: 09/01/15

REVISIONS	
SHA	FHWA

* USEABLE DRAFT *

STATE OF MARYLAND
DEPARTMENT OF TRANSPORTATION
STATE HIGHWAY ADMINISTRATION
OFFICE OF STRUCTURES

VERIFIED 1-24-12 LRFD

TYPE XLVIII BRIDGE DECK SLABS FOR
PCEF BULB TEE PRESTRESSED CONCRETE GIRDERS
HL-93 LOADING

NO. SUP-BD(CG)-109 SHEET 1 OF 1

SUPER - BRIDGE DECK

Useable DRAFT

Note:
Slanted lettering indicates notes "For Office Use Only".

Note:
1. All steel sizes and spacing based on ASTM A-615, Grade 60.
2. Transverse bars to be placed normal to center line of girderss.
3. All longitudinal bars are to be #5's placed as shown except as indicated by Note 4.
4. On continuous bridges, over piers, additional longitudinal steel to be added to the top of the slab between normal bars and indicated thus ○. See Detail No. SUP-BD(CG)-201 for the size and lengths of these additional bars.
5. *Refer to SUP-BD(CG)-101 for overhang design requirements.*

FHWA APPROVAL
DATE:

APPROVAL
_____ DIRECTOR OFFICE OF STRUCTURES
DATE: 09/01/15

REVISIONS	
SHA	FHWA

* USEABLE DRAFT *

STATE OF MARYLAND
DEPARTMENT OF TRANSPORTATION
STATE HIGHWAY ADMINISTRATION
OFFICE OF STRUCTURES

VERIFIED 1-24-12 LRFD

TYPE XLIX BRIDGE DECK SLABS FOR
PCEF BULB TEE PRESTRESSED CONCRETE GIRDERS
HL-93 LOADING

NO. SUP-BD(CG)-110 SHEET 1 OF 1

SUPER - BRIDGE DECK

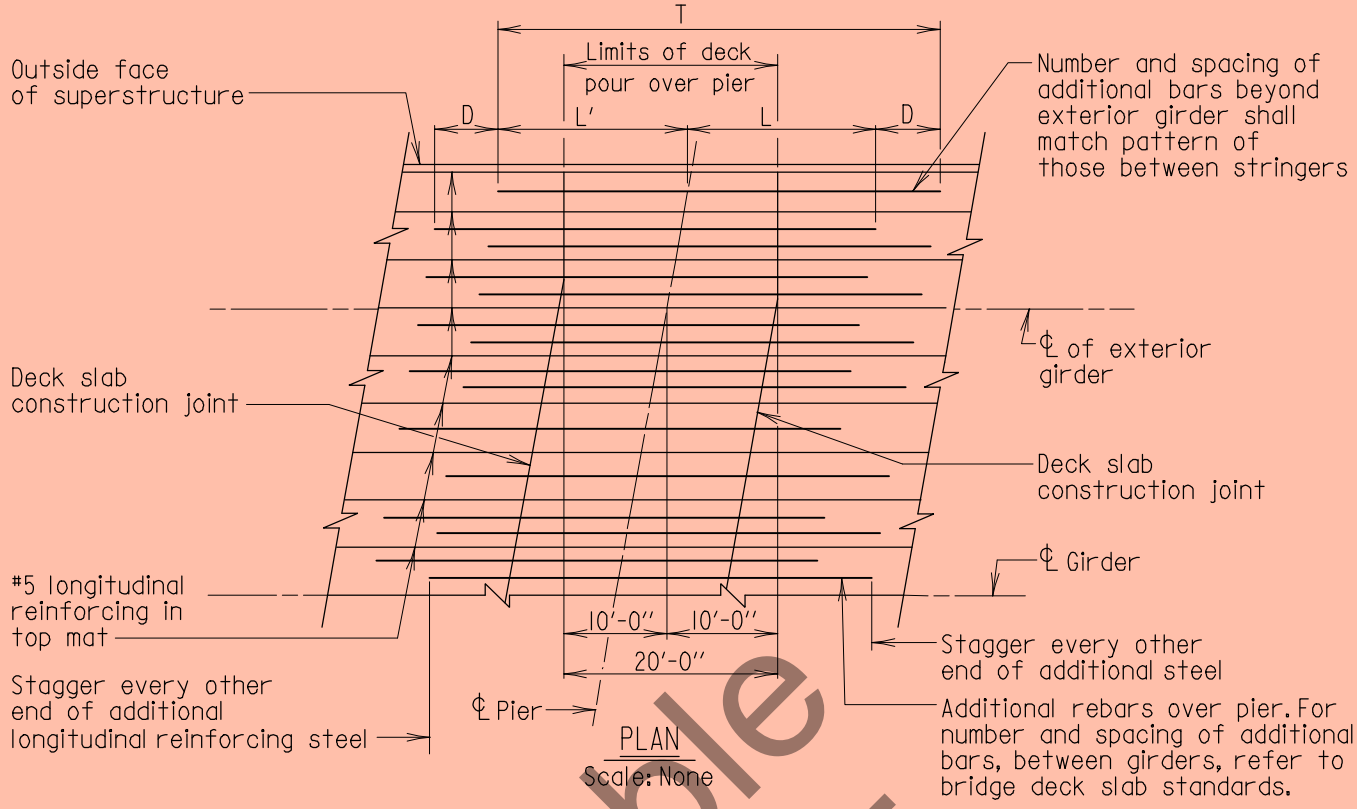

PLAN
Scale: None

Bridge # _____ Description: _____

Location	L' (Back Stationing Span)	L (Ahead Stationing Span)	D (Development Length of Bar)	T=Total Length of Bar (T=L'+L+D)	Bar Size *
Pier _____					
Pier _____					
Pier _____					
Pier _____					
Pier _____					
Pier _____					

*All bars to be #5 unless otherwise noted in this column.

Note:
If additional longitudinal reinforcing in pour requires splicing, then the reinforcing shall be spliced as per Splice Location Layout.

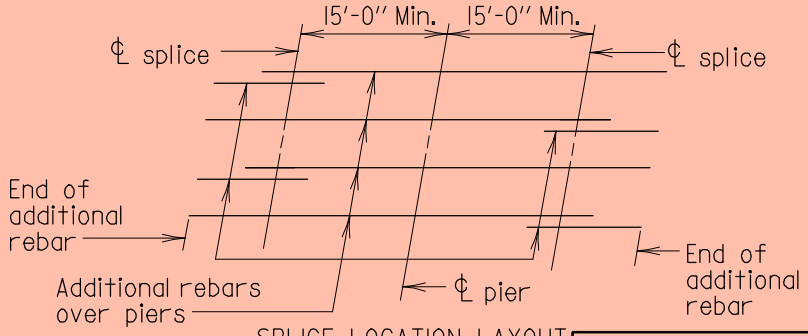

SPLICE LOCATION LAYOUT

* USEABLE DRAFT *

DESIGN NOTE:
The dimensions L and L' shall be set equal to or greater than the distance from the center line pier to the point of contraflexure plus the development length of the bar. The dimension D is an additional development length to stagger the ends of the bars.

APPROVAL
_____ DIRECTOR OFFICE OF BRIDGE DEVEL.
DATE: 09/01/15

REVISIONS	
SHA	FHWA

FHWA APPROVAL
DATE:

STATE OF MARYLAND
DEPARTMENT OF TRANSPORTATION
STATE HIGHWAY ADMINISTRATION
OFFICE OF BRIDGE DEVELOPMENT

ADDITIONAL LONGITUDINAL REINFORCING IN CONTINUOUS DECK SLABS OVER PIERS FOR CONCRETE GIRDERS

NO. SUP-BD(CG)-201 SHEET 1 OF 1

SUPER - BRIDGE DECK

Useable DRAFT

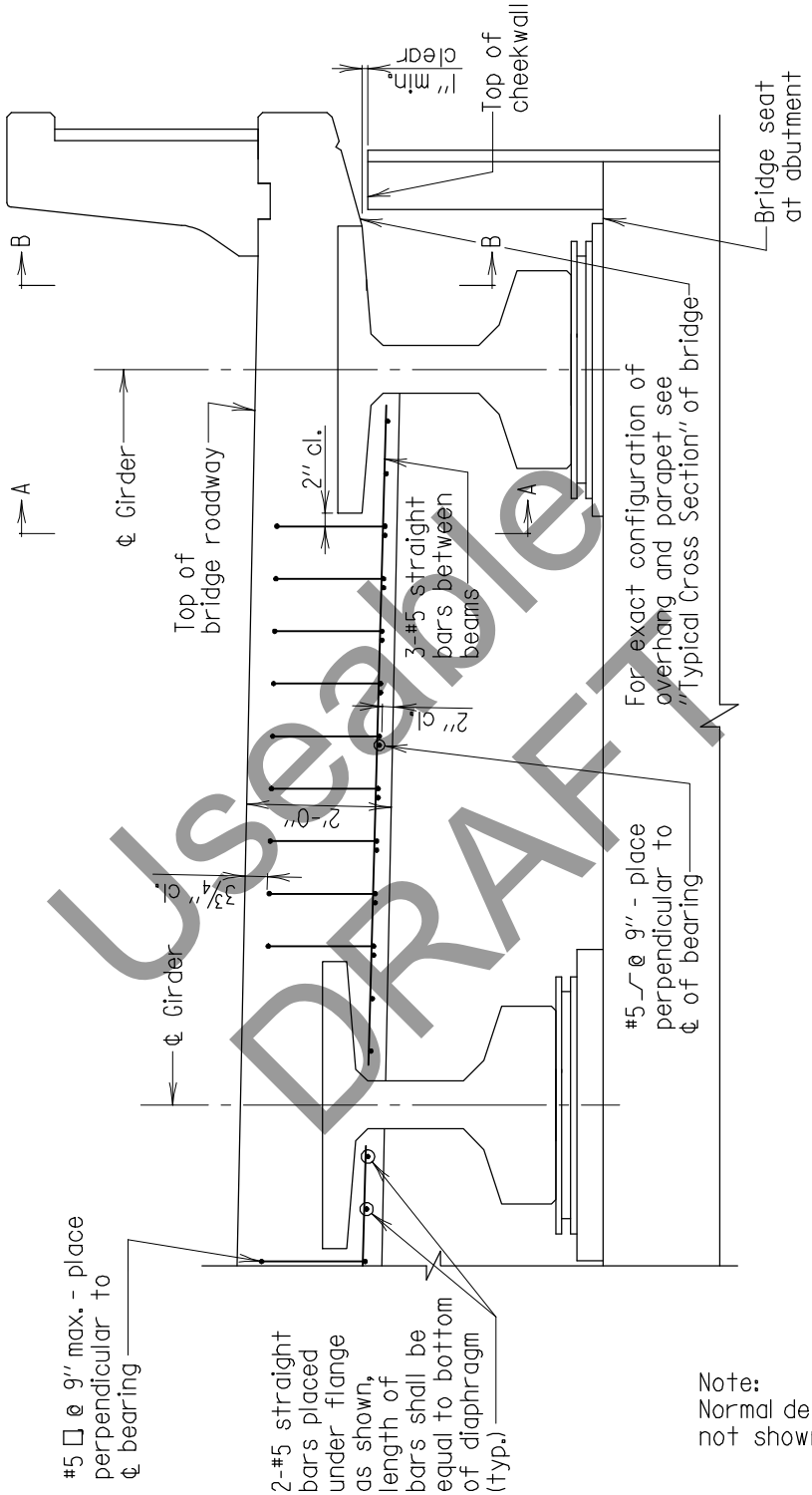

ELEVATION AT BRIDGE SEAT AREA OVER BEAMS

Scale: 3/8" = 1'-0"

Note:
Normal deck reinforcing not shown for clarity.

Useable DRAFT

* USEABLE DRAFT *

Notes:
1. For Section A-A see Sheet 3 of 4.
2. For Section B-B see Sheet 4 of 4.

APPROVAL	
_____ DIRECTOR OFFICE OF STRUCTURES	
DATE: 09/01/15	
REVISIONS	
SHA	FHWA

FHWA APPROVAL
DATE:

STATE OF MARYLAND
DEPARTMENT OF TRANSPORTATION
STATE HIGHWAY ADMINISTRATION
OFFICE OF STRUCTURES

CONCRETE DIAPHRAGMS AT ABUTMENTS CARRYING PRESTRESSED CONCRETE GIRDERS WITH ELASTOMERIC BEARINGS WITH LENGTHS CONTRIBUTING TO EXPANSION > 70 FEET

NO. SUP-BD(CG)-301 SHEET 1 OF 4

SUPER BRIDGE DECK

Notes:
1. For Section A-A see Sheet 3 of 4.
2. For Section B-B see Sheet 4 of 4.

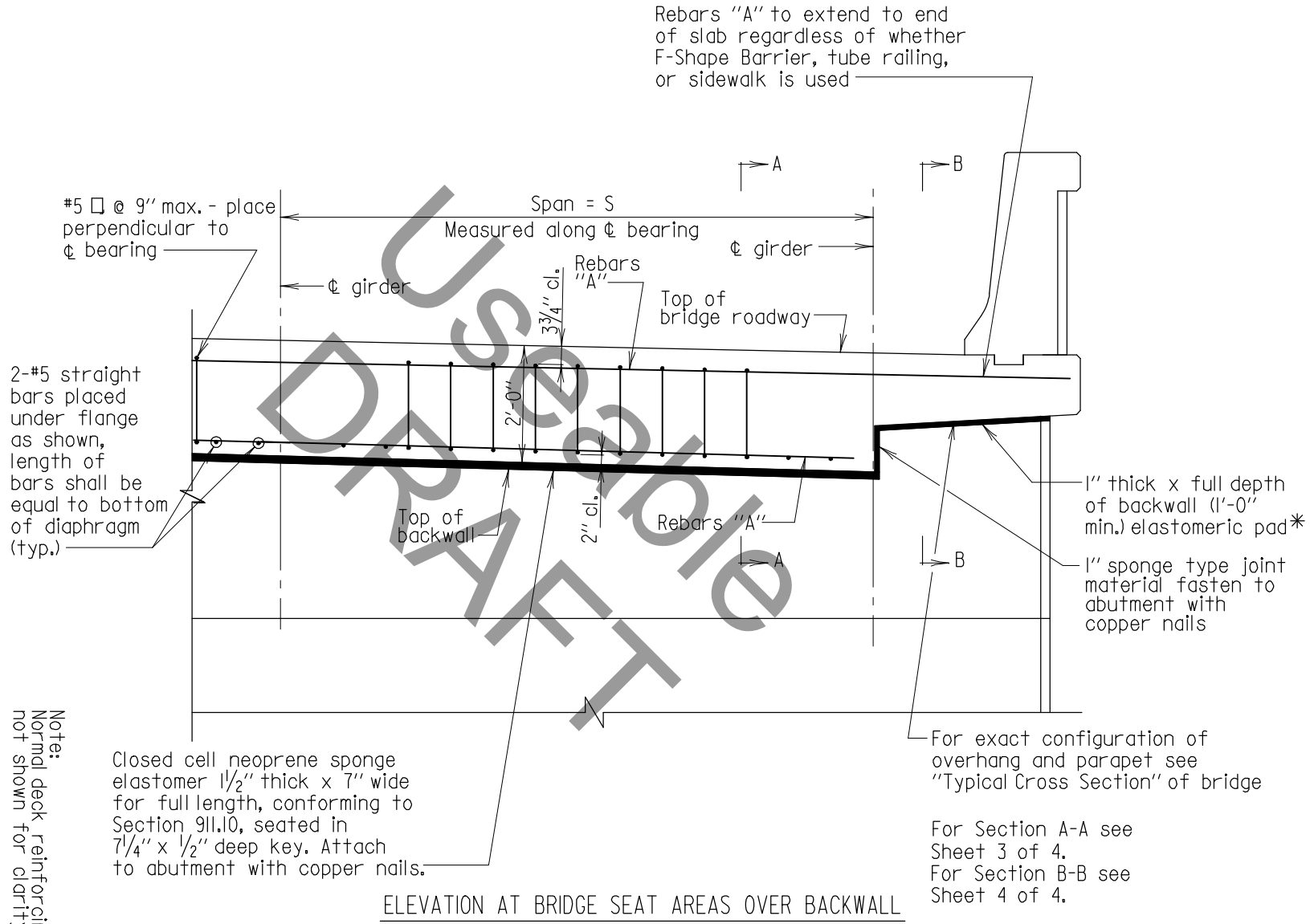

Note:
Normal deck reinforcing not shown for clarity.

ELEVATION AT BRIDGE SEAT AREAS OVER BACKWALL

Scale: 3/8" = 1'-0"

*Note:
Elastomeric pad shall be attached to abutment backwall in accordance with the Section 432.03.04.

Useable DRAFT

APPROVAL
DIRECTOR
OFFICE OF STRUCTURES
DATE: 08/01/15

REVISIONS
SHA
FHWA

FHWA APPROVAL
DATE:

STATE OF MARYLAND
DEPARTMENT OF TRANSPORTATION
STATE HIGHWAY ADMINISTRATION
OFFICE OF STRUCTURES

CONCRETE DIAPHRAGMS AT ABUTMENTS CARRYING PRESTRESSED CONCRETE GIRDERS WITH ELASTOMERIC EXPANSION BEARINGS LENGTHS CONTRIBUTING TO EXPANSION > 70 FEET

NO. SUP-BD(CG)-301

SHEET 2 OF 4

* USEABLE DRAFT *

SUPER BRIDGE DECK

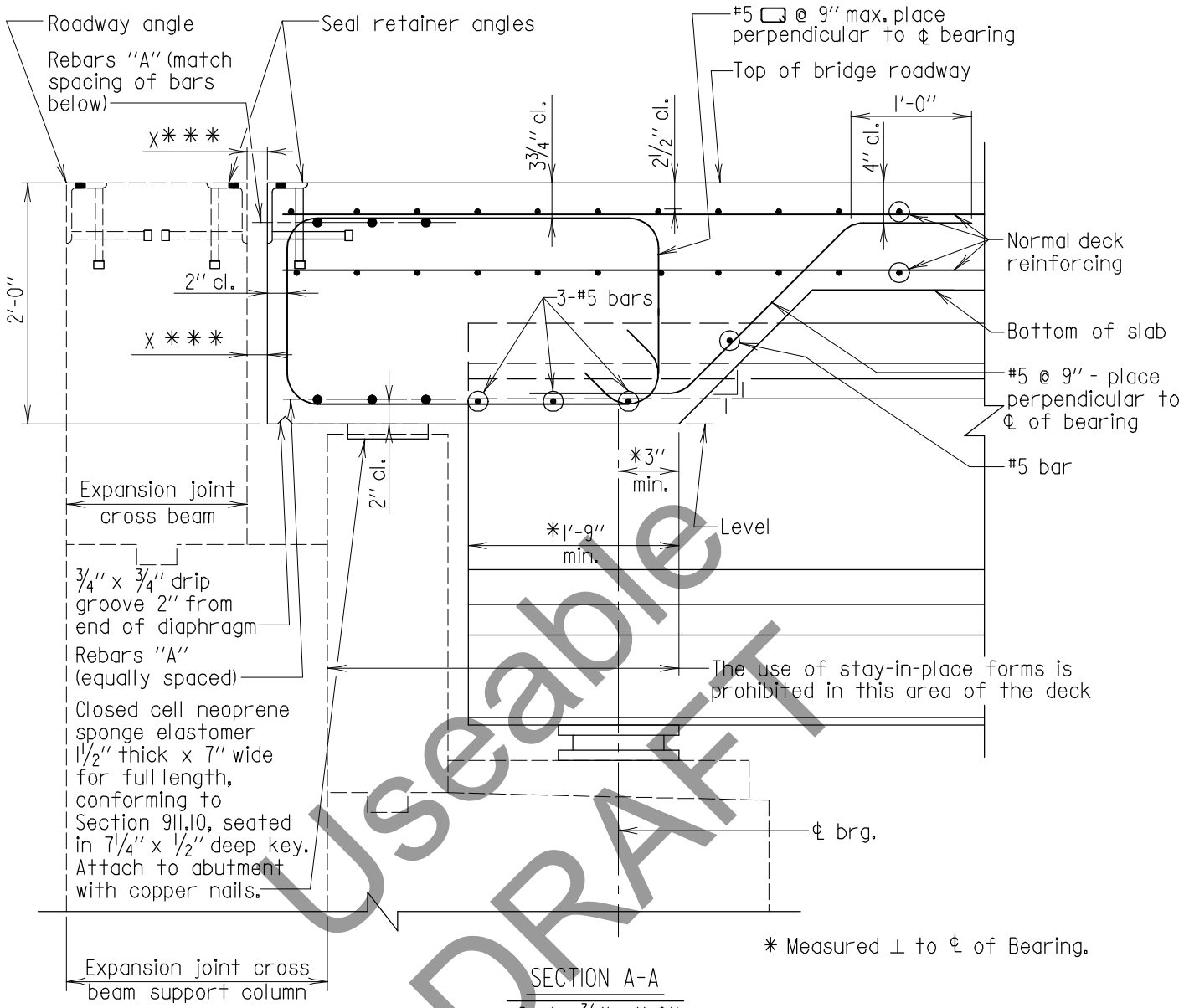

* Measured ⊥ to ℄ of Bearing.

SECTION A-A

Scale: ¾" = 1'-0"

X*** = Joint opening dimension, see appropriate joint detail.

Span = S	Rebars "A"
Up to 8'	3-#7's
over 8' to 14'	3-#8's
over 14' to 16'	3-#9's

* USEABLE DRAFT *

Note:
All reinforcing steel shown shall be epoxy coated.

APPROVAL	
_____ DIRECTOR OFFICE OF STRUCTURES	
DATE: 09/01/15	
REVISIONS	
SHA	FHWA

FHWA APPROVAL
DATE:

STATE OF MARYLAND
DEPARTMENT OF TRANSPORTATION
STATE HIGHWAY ADMINISTRATION
OFFICE OF STRUCTURES

CONCRETE DIAPHRAGMS AT ABUTMENTS CARRYING PRESTRESSED CONCRETE GIRDERS WITH ELASTOMERIC EXPANSION BEARING WITH LENGTHS CONTRIBUTING TO EXPANSION > 70 FEET

NO. SUP-BD(CG)-301 SHEET 3 OF 4

SUPER BRIDGE DECK

Useable DRAFT

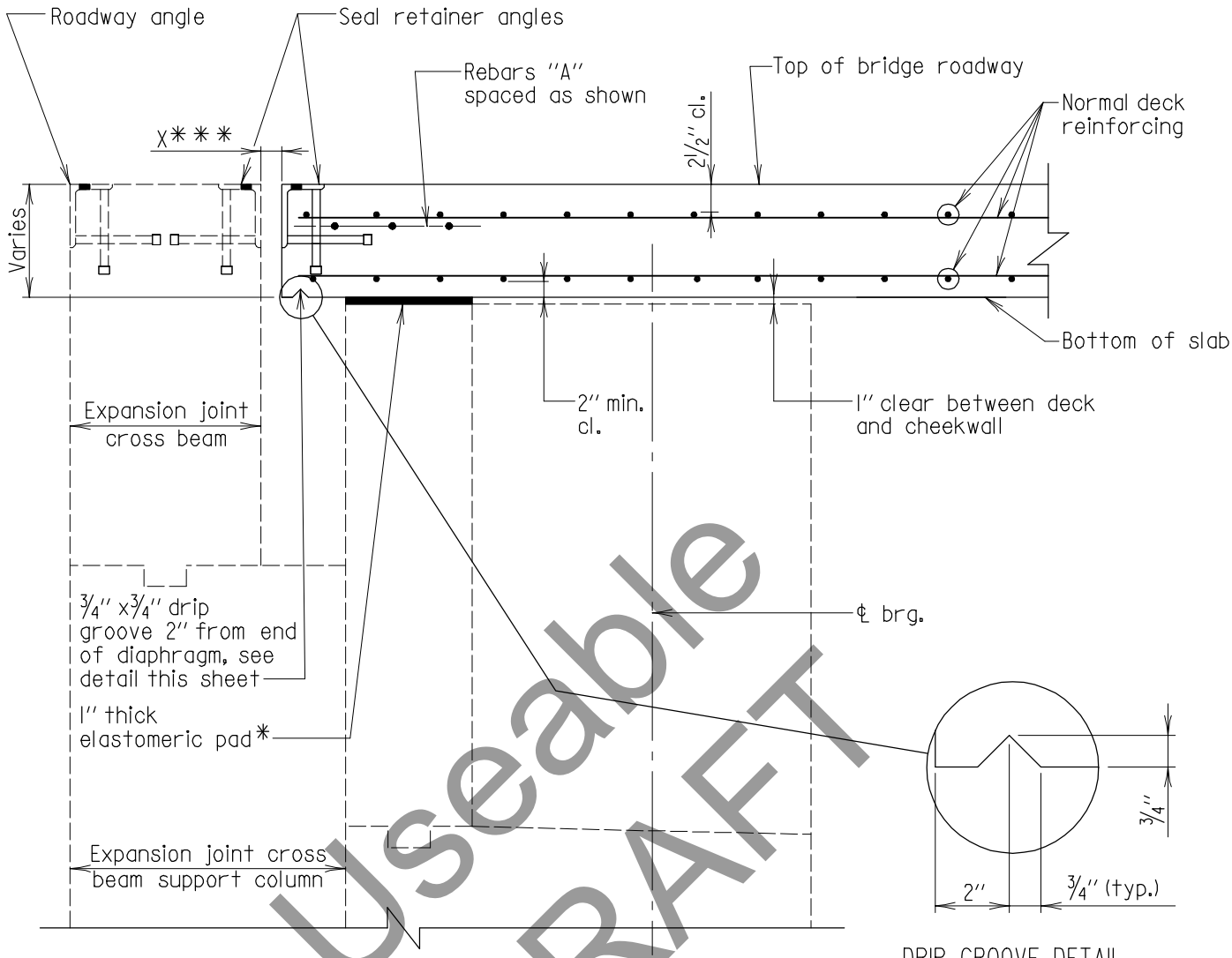

DRIP GROOVE DETAIL

Scale: 3" = 1'-0"

SECTION B-B

Scale: 3/4" = 1'-0"

Useable DRAFT

* Note:
Elastomeric pad shall be attached to abutment backwall in accordance with the Section 432.03.04.

X*** = Joint opening dimension, see appropriate joint detail.

Span = S	Rebars "A"
Up to 8'	3-#7's
over 8' to 14'	3-#8's
over 14' to 16'	3-#9's

Note:
All reinforcing steel shown shall be epoxy coated.

* USEABLE DRAFT *

APPROVAL	
_____ DIRECTOR OFFICE OF STRUCTURES DATE: 09/01/15	
REVISIONS	
SHA	FHWA

FHWA APPROVAL
DATE:

STATE OF MARYLAND
DEPARTMENT OF TRANSPORTATION
STATE HIGHWAY ADMINISTRATION
OFFICE OF STRUCTURES

CONCRETE DIAPHRAGMS AT ABUTMENTS CARRYING PRESTRESSED CONCRETE GIRDERS WITH ELASTOMERIC EXPANSION BEARING WITH LENGTHS CONTRIBUTING TO EXPANSION > 70 FEET

NO. SUP-BD(CG)-301 SHEET 4 OF 4

SUPER BRIDGE DECK

ELEVATION AT BRIDGE SEAT AREA OVER BEAMS

Scale: 3/8" = 1'-0"

Note:
Normal deck reinforcing not shown for clarity.

Notes:
1. For Section A-A see sheet 3 of 4.
2. For Section B-B see sheet 4 of 4.

* USEABLE DRAFT *

APPROVAL	
_____ DIRECTOR OFFICE OF STRUCTURES	
DATE: 09/01/15	
REVISIONS	
SHA	FHWA

FHWA APPROVAL
DATE:

STATE OF MARYLAND
DEPARTMENT OF TRANSPORTATION
STATE HIGHWAY ADMINISTRATION
OFFICE OF STRUCTURES

CONCRETE DIAPHRAGMS AT ABUTMENTS CARRYING PRESTRESSED CONCRETE GIRDERS WITH ELASTOMERIC FIXED BEARINGS OR ELASTOMERIC EXPANSION BEARINGS WITH LENGTHS CONTRIBUTING TO EXPANSION ≤ 70 FEET

NO. SUP-BD(CG)-401 SHEET 1 OF 4

SUPER BRIDGE DECK

Note:
Normal deck reinforcing not shown for clarity.

Notes:
1. For Section A-A see sheet 3 of 4.
2. For Section B-B see sheet 4 of 4.

* USEABLE DRAFT *

APPROVAL	
_____ DIRECTOR OFFICE OF STRUCTURES	
DATE: 09/01/15	
REVISIONS	
SHA	FHWA

FHWA APPROVAL
DATE:

STATE OF MARYLAND
DEPARTMENT OF TRANSPORTATION
STATE HIGHWAY ADMINISTRATION
OFFICE OF STRUCTURES

CONCRETE DIAPHRAGMS AT ABUTMENTS CARRYING PRESTRESSED CONCRETE GIRDERS WITH ELASTOMERIC FIXED BEARINGS OR ELASTOMERIC EXPANSION BEARINGS WITH LENGTHS CONTRIBUTING TO EXPANSION ≤ 70 FEET

NO. SUP-BD(CG)-401 SHEET 2 OF 4

SUPER BRIDGE DECK

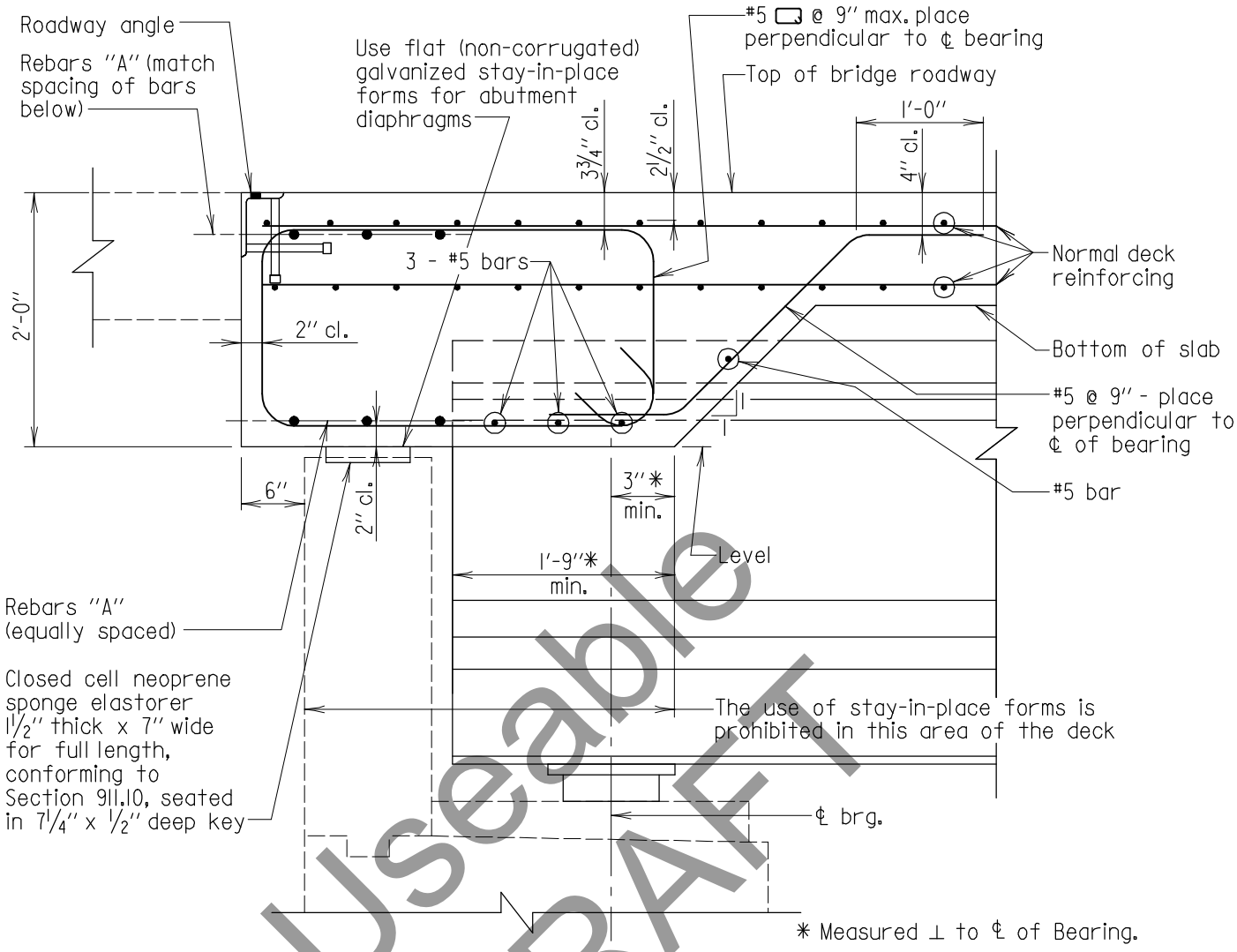

SECTION A-A

Scale: 3/4" = 1'-0"

Useable DRAFT

Span = S	Rebars "A"
Up to 8'	3-#7's
over 8' to 14'	3-#8's
over 14' to 16'	3-#9's

* USEABLE DRAFT *

Note:
All reinforcing steel shown shall be epoxy coated.

APPROVAL	
_____ DIRECTOR OFFICE OF STRUCTURES	
DATE: 09/01/15	
REVISIONS	
SHA	FHWA

FHWA APPROVAL
DATE:

STATE OF MARYLAND
DEPARTMENT OF TRANSPORTATION
STATE HIGHWAY ADMINISTRATION
OFFICE OF STRUCTURES

CONCRETE DIAPHRAGMS AT ABUTMENTS CARRYING PRESTRESSED CONCRETE GIRDERS WITH ELASTOMERIC FIXED BEARINGS OR ELASTOMERIC EXPANSION BEARINGS WITH LENGTHS CONTRIBUTING TO EXPANSION ≮ 70 FEET

NO. SUP-BD(CG)-401 SHEET 3 OF 4

SUPER BRIDGE DECK

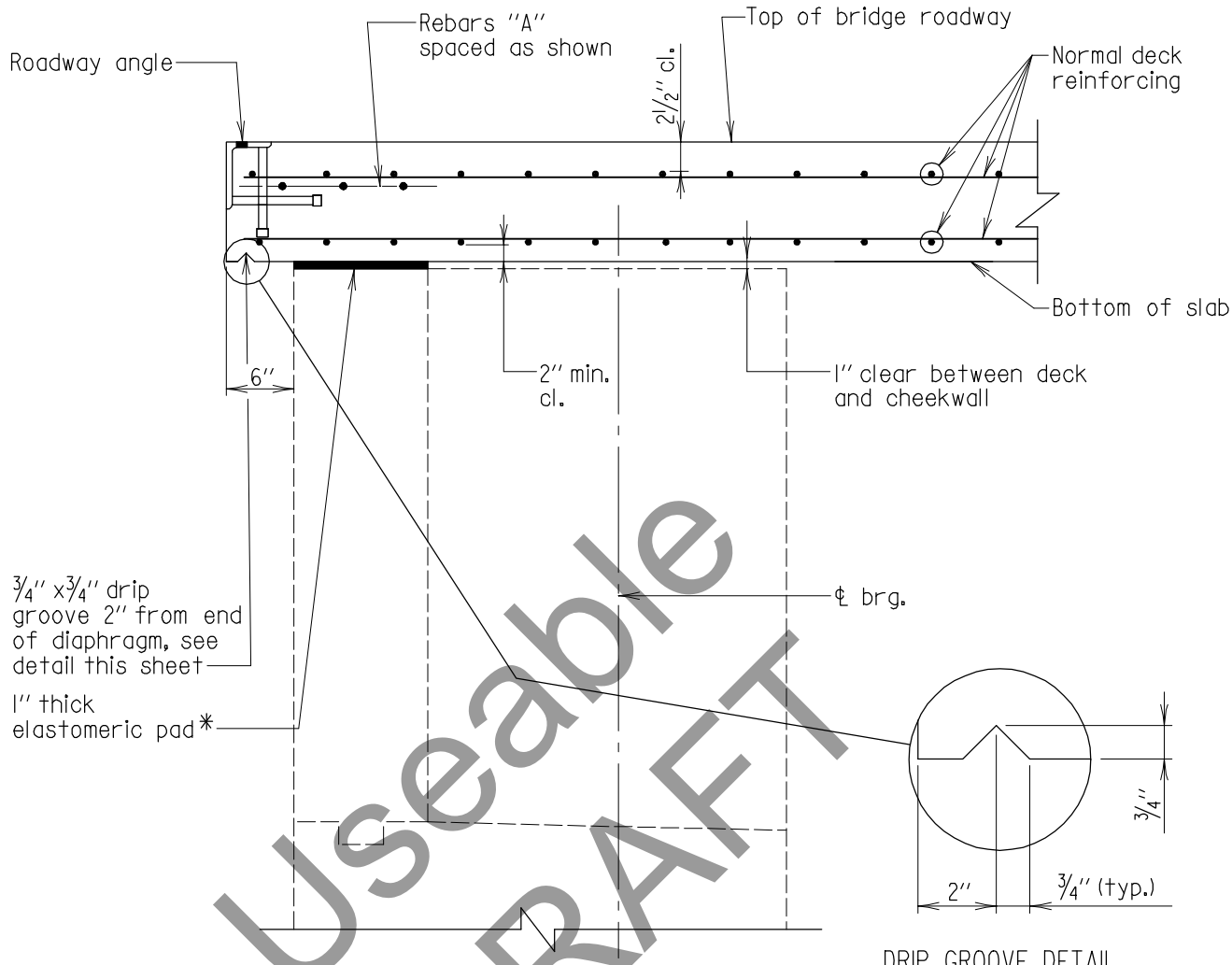

DRIP GROOVE DETAIL

Scale: 3" = 1'-0"

SECTION B-B

Scale: 3/4" = 1'-0"

* Note:
Elastomeric pad shall be attached to abutment backwall in accordance with the Section 432.03.04.

Span = S	Rebars "A"
Up to 8'	3-#7's
over 8' to 14'	3-#8's
over 14' to 16'	3-#9's

Note:
All reinforcing steel shown shall be epoxy coated.

* USEABLE DRAFT *

APPROVAL	
_____ DIRECTOR OFFICE OF STRUCTURES	
DATE: 09/01/15	
REVISIONS	
SHA	FHWA

FHWA APPROVAL
DATE:

STATE OF MARYLAND
DEPARTMENT OF TRANSPORTATION
STATE HIGHWAY ADMINISTRATION
OFFICE OF STRUCTURES

CONCRETE DIAPHRAGMS AT ABUTMENTS CARRYING PRESTRESSED CONCRETE GIRDERS WITH ELASTOMERIC FIXED BEARINGS OR ELASTOMERIC EXPANSION BEARINGS WITH LENGTHS CONTRIBUTING TO EXPANSION ≤ 70 FEET

NO. SUP-BD(CG)-401 SHEET 4 OF 4

SUPER BRIDGE DECK

Useable DRAFT

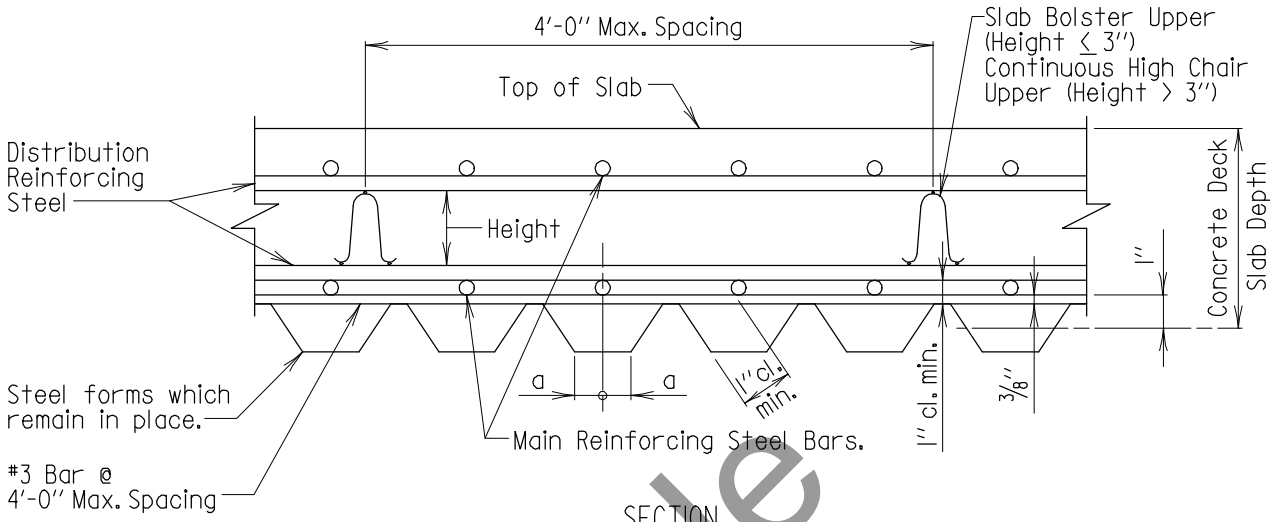

SECTION
Scale: None

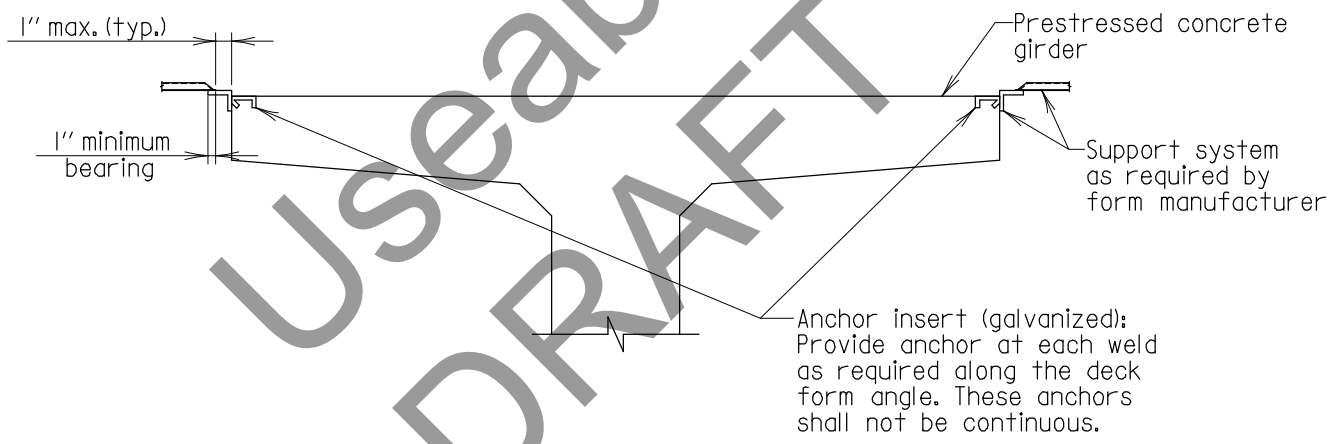

FORM ANCHOR DETAIL
Scale: 1'' = 1'-0''

Useable DRAFT

Notes:

1. Permanent steel deck forms and supports shall conform to 909.11. Design Span shall be the clear distance between girder flanges less two (2) inches.
2. These forms shall be vertically adjusted to attain line and grade as required.
3. Any permanently exposed form metal where the galvanized coating has been damaged shall be thoroughly cleaned, wire brushed and painted with two coats of zinc-oxide dust primer, Federal Specification TT-P-641d, Type II, no color added, to the satisfaction of the Engineer. Minor heat discoloration in areas of welds need not be touched up.
4. Contractor has option of using this detail or that shown on 2 of 2, except for bridge decks with a flared rebar pattern. For bridges with a flared rebar pattern only the detail shown on sheet 2 of 2 can be used.
5. Supports for rebar shall be provided by Contractor.

* USEABLE DRAFT *

APPROVAL	
_____ DEPUTY CHIEF ENGR. BRIDGE DEVEL.	
DATE: 09/01/15	
REVISIONS	
SHA	FHWA

FHWA APPROVAL
DATE:

STATE OF MARYLAND
DEPARTMENT OF TRANSPORTATION
STATE HIGHWAY ADMINISTRATION
OFFICE OF BRIDGE DEVELOPMENT

STEEL FORMS WHICH REMAIN IN PLACE
FOR CONCRETE SLABS ON CONCRETE GIRDERS
RE-BARS ALIGNED WITH TROUGH

NO. SUP-BD(CG)-501 SHEET 1 OF 2

SUPER - BRIDGE DECK

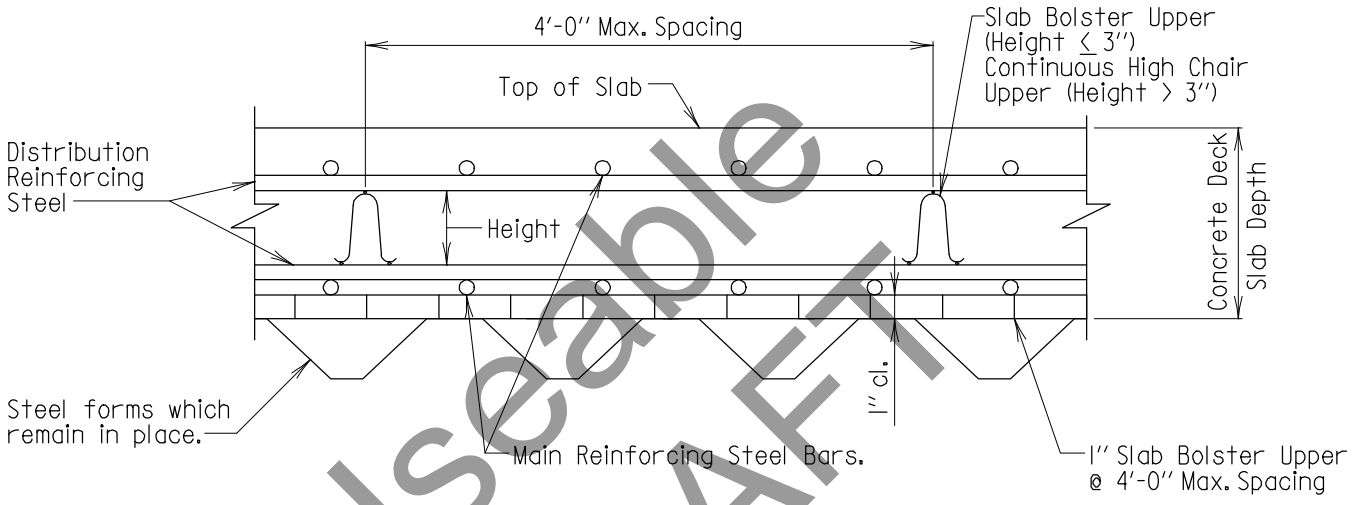

SECTION
Scale: None

Useable DRAFT

Notes:
1. For notes see sheet 1 of 2.
2. This detail is acceptable only on structures where the General Notes under "Loading" states " and 15 pounds per square foot for use of steel bridge deck forms which remain in place".
3. Supports for rebar shall be provided by Contractor.

* USEABLE DRAFT *

APPROVAL
_____ DEPUTY CHIEF ENGR. BRIDGE DEVEL.
DATE: 09/01/15

REVISIONS	
SHA	FHWA

FHWA APPROVAL	
DATE:	

STATE OF MARYLAND
DEPARTMENT OF TRANSPORTATION
STATE HIGHWAY ADMINISTRATION
OFFICE OF BRIDGE DEVELOPMENT

STEEL FORMS WHICH REMAIN IN PLACE
FOR CONCRETE SLABS ON CONCRETE GIRDERS
RE-BARS INDEPENDENT WITH TROUGH

NO. SUP-BD(CG)-501 SHEET 2 OF 2

SUPER - BRIDGE DECK

SUPERSTRUCTURE

BRIDGE DECK

STAGED CONSTRUCTION

(SUP-BD(SC))

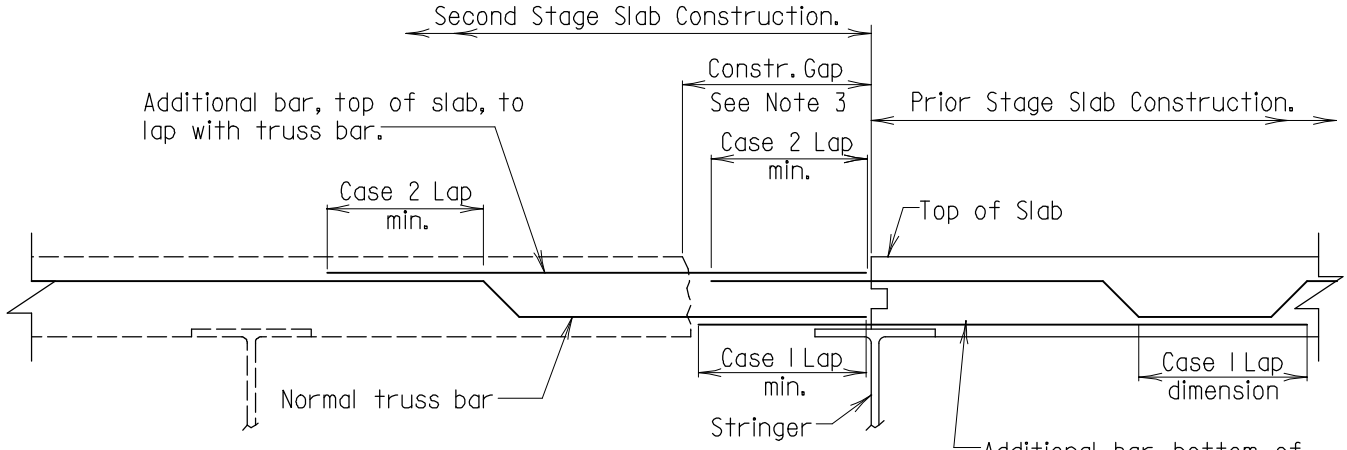

SECTION

TYPE I SPLICE

Scale: 1/2" = 1'-0"

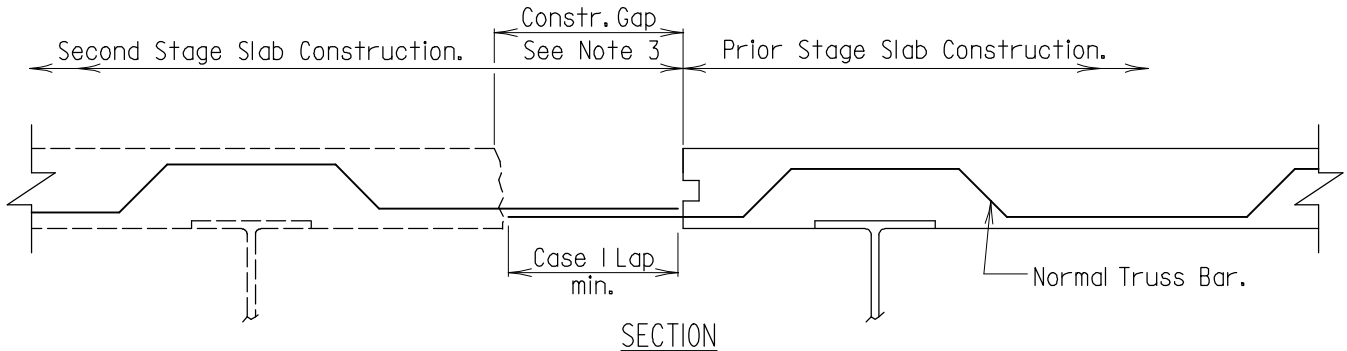

SECTION

TYPE II SPLICE

Scale: 1/2" = 1'-0"

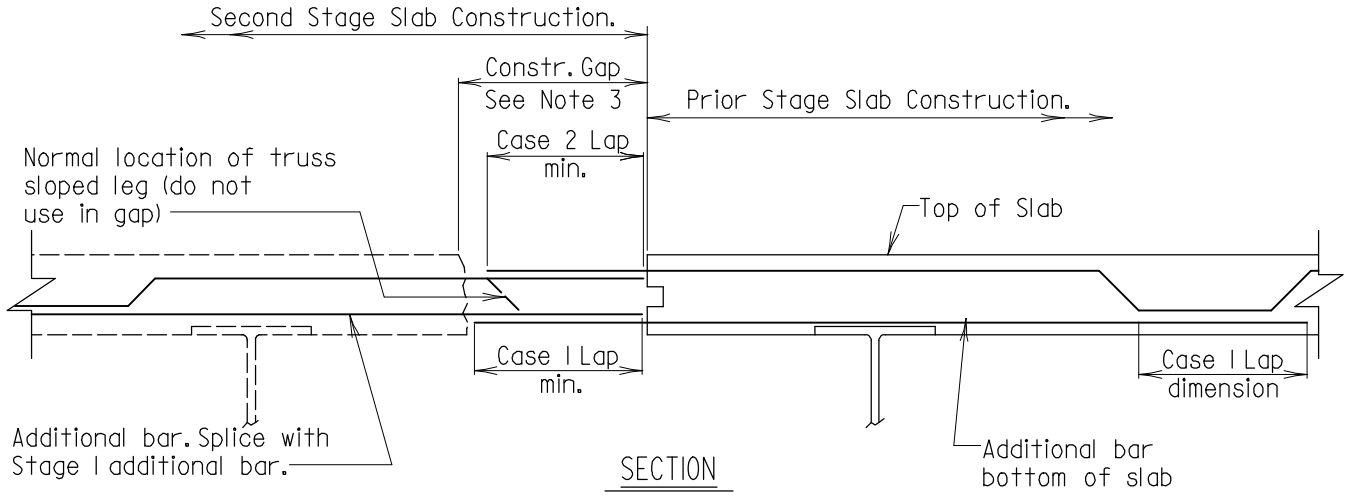

SECTION

TYPE III SPLICE

Scale: 1/2" = 1'-0"

Notes:

1. See appropriate lap charts for Case 1 and Case 2 splice dimensions.
2. See Std. No. SUP-BD(DT)-201 for Longitudinal and Additional Top Bar over Pier lap length notes.
3. Min. Constr. Gap dim. = Case 1 Lap + 1".
4. See Contract Drawing for construction gap location.

APPROVAL
R.S. Friedman DIRECTOR OFFICE OF STRUCTURES
DATE: 10/3/83

REVISIONS	
SHA	FHWA
3-9-89	6-8-90
2-19-92	
11-15-95	
1-22-01	

FHWA APPROVAL
DATE: 10-5-83

STATE OF MARYLAND
DEPARTMENT OF TRANSPORTATION
STATE HIGHWAY ADMINISTRATION
OFFICE OF STRUCTURES

SPLICING OF BRIDGE DECK SLAB
TRUSS BARS DURING STAGE CONSTRUCTION
LAP SPLICE ALTERNATIVES

STANDARD NO. SUP-BD(SC)-101 SHEET 1 OF 1

SUPER - BRIDGE DECK

OLD NO. BR-SS(6.23)-83-149

GENERAL NOTES

1. Longitudinal deck reinforcing steel not shown.
2. Existing slab shown dashed.
3. Splicer bars and normal transverse reinforcing steel to be placed in same horizontal plane.
4. These splice bars will not be measured for payment, but all costs thereof shall be included in the Contract lump sum price for the pertinent Epoxy Coated Reinforcing Steel items.

5a. Root diameter of threaded portion of splicer bar must be equal to nominal diameter of designed bar. Increasing bar diameter to next size is permissable to maintain this requirement.

5b. In no case shall the splicer rebar coupler flange encroach into the slab top or bottom concrete cover. Either no flange or clipping the top and bottom edges of the flange prior to application of the epoxy coating in the shop is permissable. (See details below)

6. *FOR OFFICE USE ONLY*
This detail is intended for use on stage construction where the gap between stages of construction does not accomodate the minimum bar lap lengths.

Certification: The steel manufacturer shall furnish certification with actual test results for each heat of steel, showing that the material conforms to these Specifications.

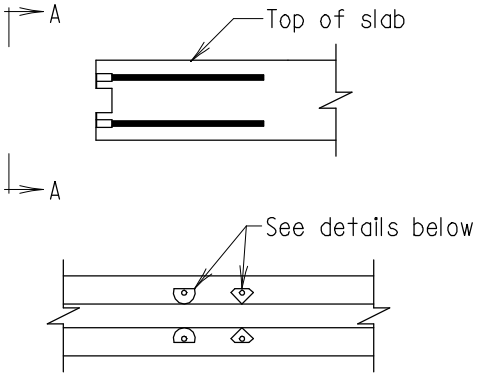

SECTION A-A

Scale: 1/2" = 1'-0"

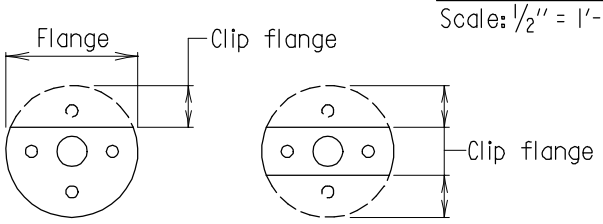

FRONT VIEW ROUND FLANGE

Scale: None

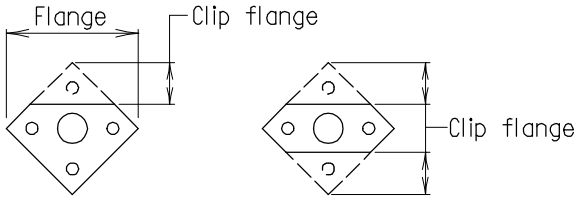

FRONT VIEW SQUARE FLANGE

Scale: None

APPROVAL		
R.S. Freedman DIRECTOR OFFICE OF STRUCTURES DATE: 7/20/88		
REVISIONS		
SHA	FHWA	
2-28-89	6-8-90	
11-15-95		
9-24-96		

FHWA APPROVAL DATE: 6-8-90

STATE OF MARYLAND
DEPARTMENT OF TRANSPORTATION
STATE HIGHWAY ADMINISTRATION
OFFICE OF STRUCTURES

SPLICING OF BRIDGE DECK SLAB REINFORCING STEEL DURING STAGE CONSTRUCTION (NO AREA AVAILABLE FOR LAPPING)

STANDARD NO. SUP-BD(SC)-102 SHEET 1 OF 4

SUPER - BRIDGE DECK

OLD NO. BR-SS(6.31)-88-199

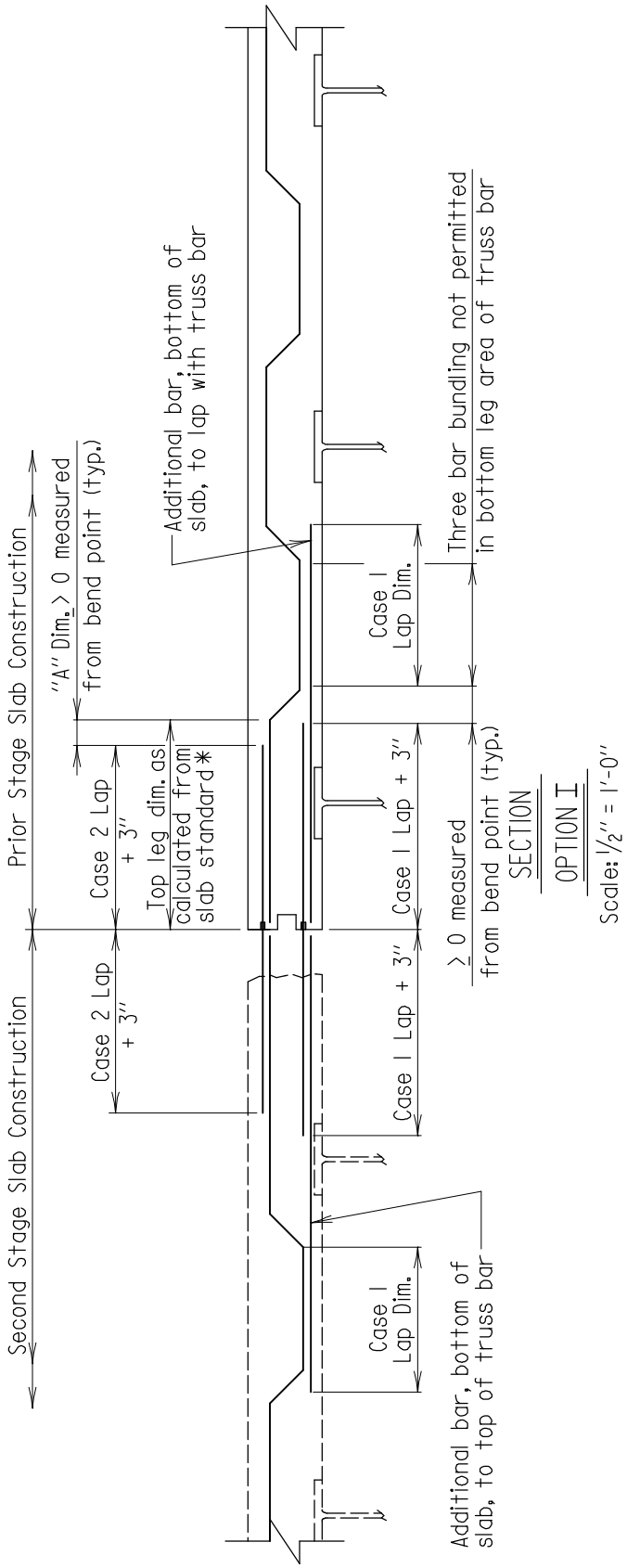

SECTION
OPTION I
Scale: 1/2" = 1'-0"

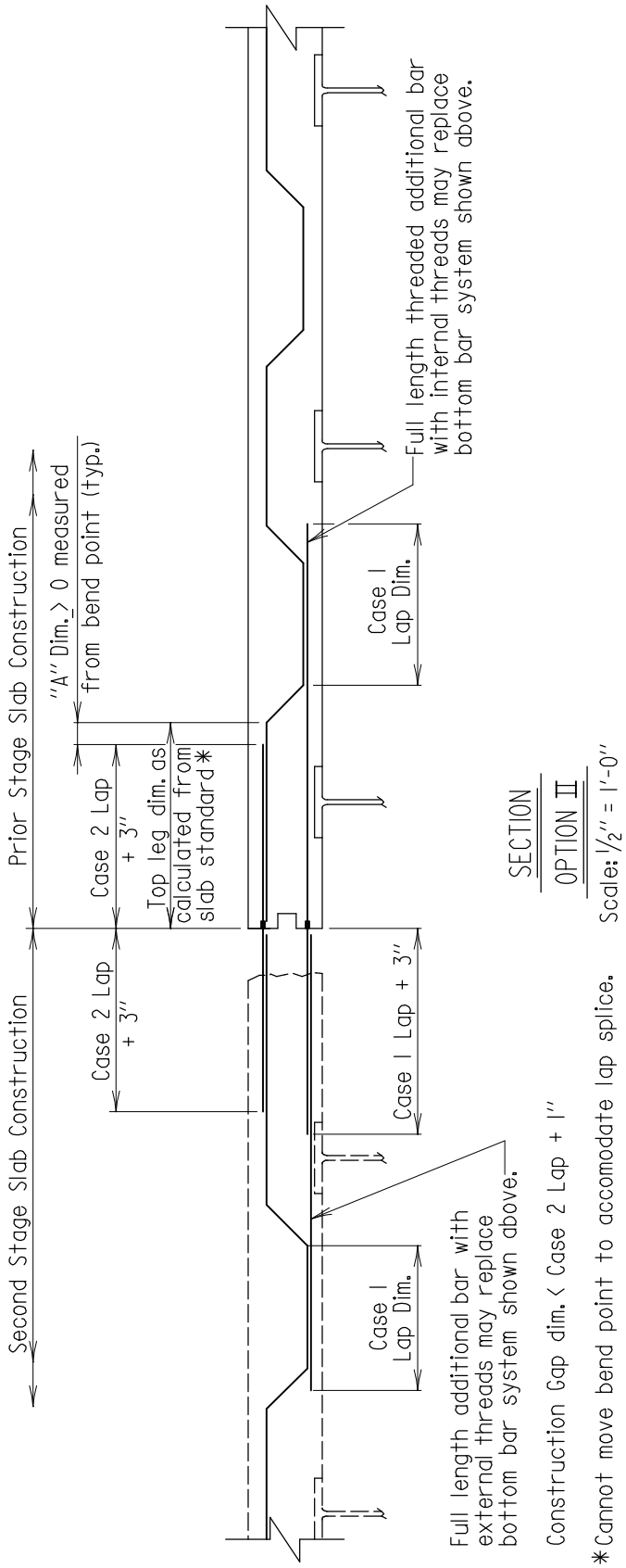

SECTION
OPTION II
Scale: 1/2" = 1'-0"

Construction Gap dim. < Case 2 Lap + 1"

*Cannot move bend point to accomodate lap splice.

Other Related Standards
SUP-BD(DT)-201

Notes:
1. For General Notes see Sht. No. 1 of 4.
2. Work with sheets 3 and 4 of 4.

APPROVAL	
R.S. Friedman DIRECTOR OFFICE OF STRUCTURES	
DATE: 7/20/88	
REVISIONS	
SHA	FHWA
7-31-91	
11-15-95	
FHWA APPROVAL	
DATE: 6-8-90	

STATE OF MARYLAND
DEPARTMENT OF TRANSPORTATION
STATE HIGHWAY ADMINISTRATION
OFFICE OF STRUCTURES

SPLICING OF BRIDGE DECK SLAB
TRUSS BARS DURING STAGE CONSTRUCTION
COUPLER BAR SPLICE ALTERNATIVES

STANDARD NO. SUP-BD(SC)-102 SHEET 2 OF 4

SUPER - BRIDGE DECK

OLD NO. BR-SS(6.31)-88-199

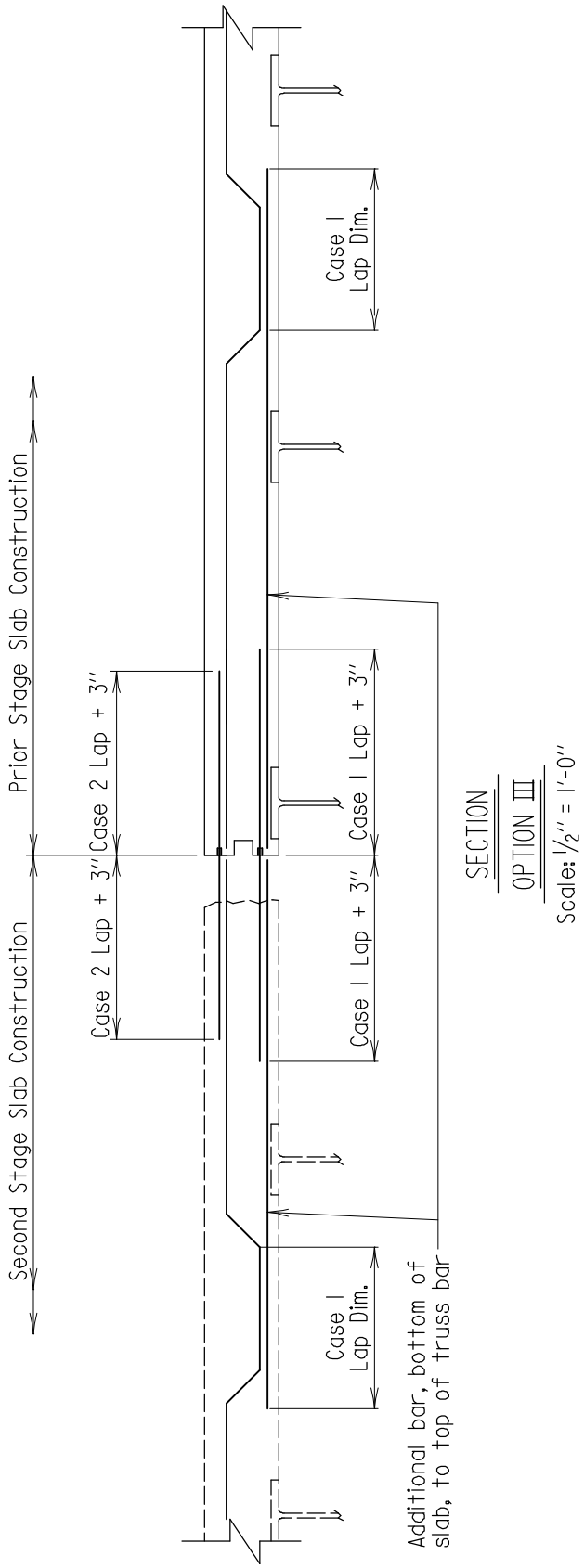

SECTION
OPTION III
Scale: 1/2'' = 1'-0''

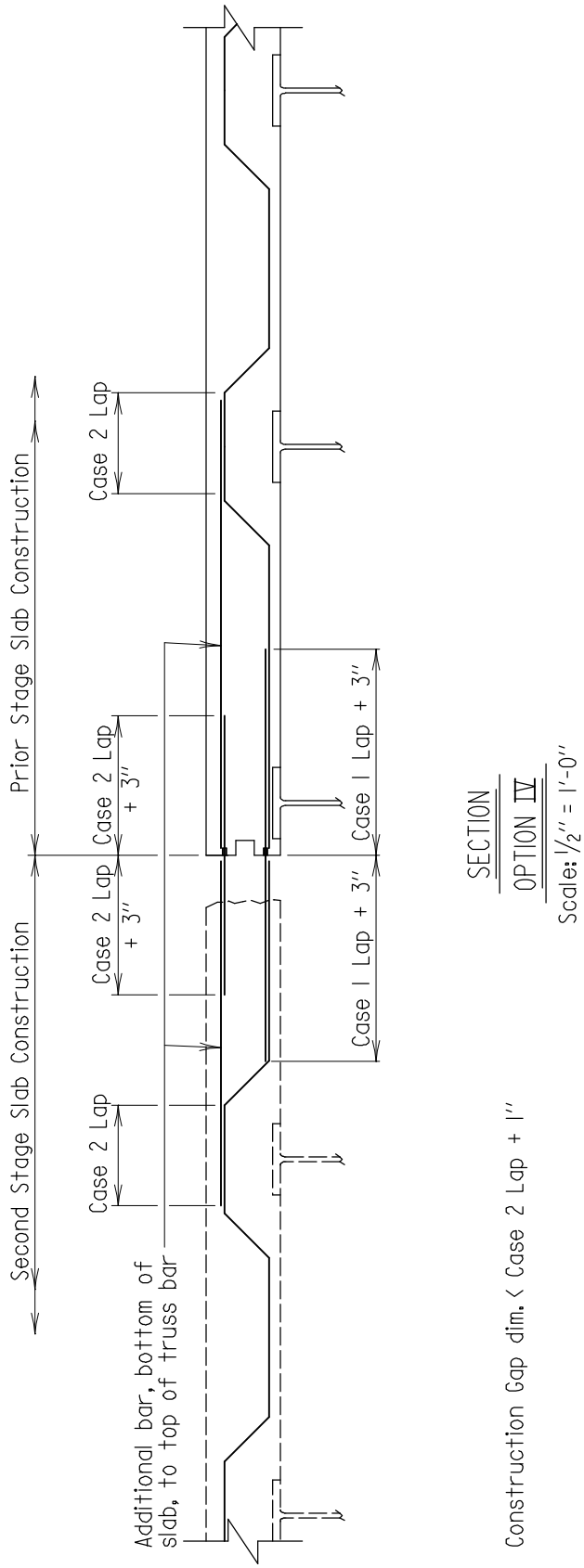

SECTION
OPTION IV
Scale: 1/2'' = 1'-0''

Other Related Standards
SUP-BD(DT)-201

Notes:
1. Work with sheets 2 and 4 of 4.
2. For General Notes see Sht. No. 1 of 4.

APPROVAL	
R.S. Freedman DIRECTOR OFFICE OF STRUCTURES DATE: 7/20/88	
REVISIONS	
SHA	FHWA
8-14-89	6-8-90
7-31-91	
11-15-95	

FHWA APPROVAL
DATE: 6-8-90

STATE OF MARYLAND
DEPARTMENT OF TRANSPORTATION
STATE HIGHWAY ADMINISTRATION
OFFICE OF STRUCTURES

SPLICING OF BRIDGE DECK SLAB
TRUSS BARS DURING STAGE CONSTRUCTION
COUPLER BAR SPLICE ALTERNATIVES

STANDARD NO. SUP-BD(SC)-102 SHEET 3 OF 4

SUPER - BRIDGE DECK

OLD NO. BR-SS(6.31)-88-199

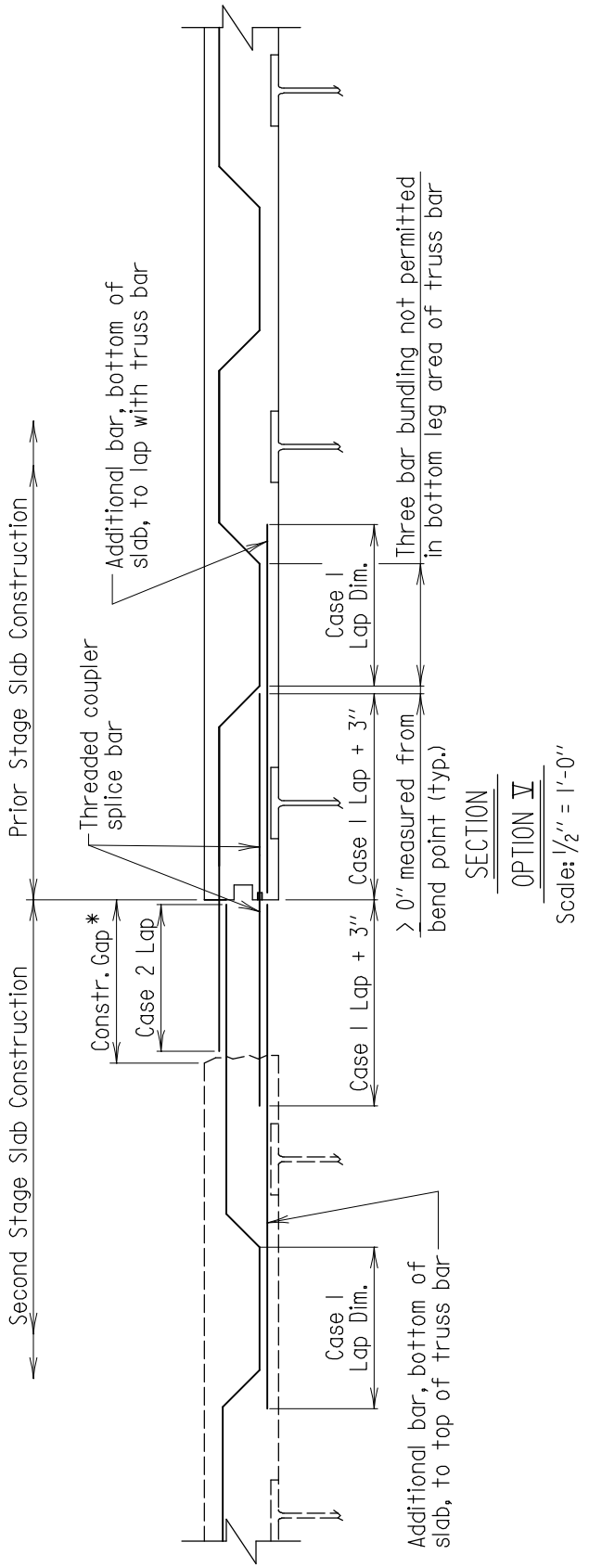

SECTION
OPTION V
Scale: 1/2" = 1'-0"

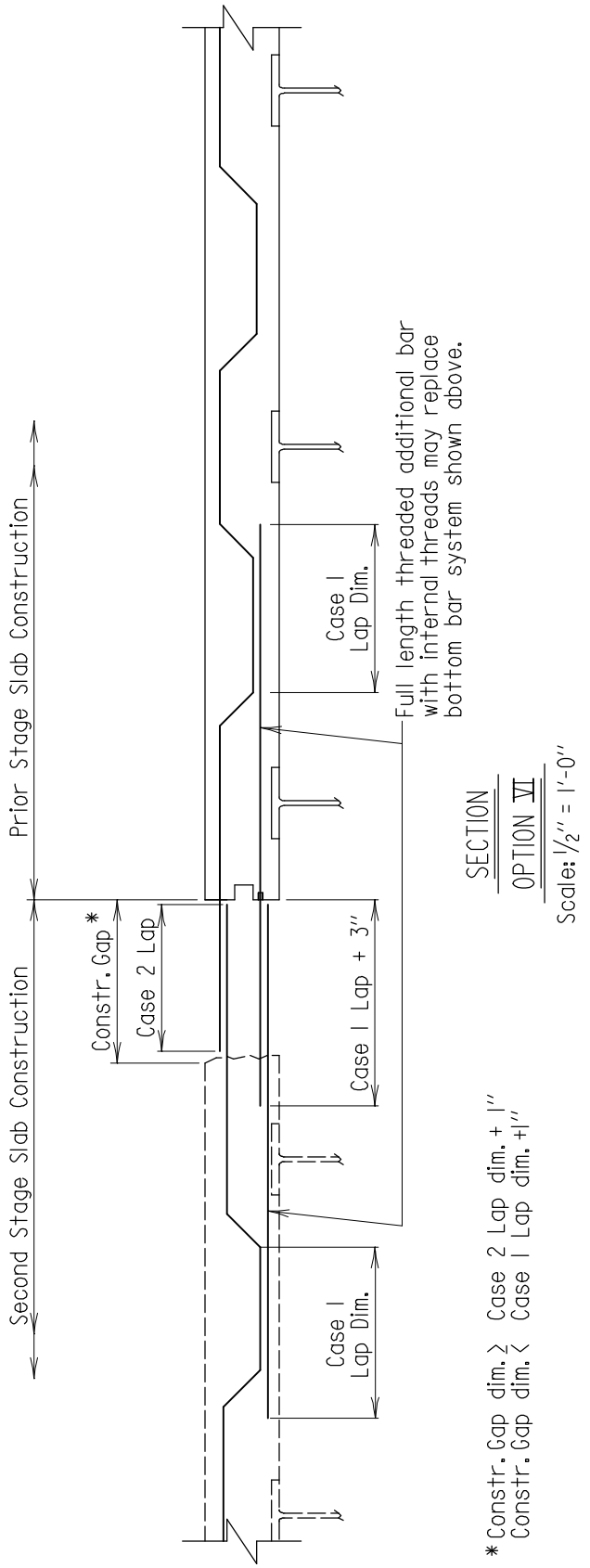

SECTION
OPTION VI
Scale: 1/2" = 1'-0"

* Constr. Gap dim. ≥ Case 2 Lap dim. + 1"
Constr. Gap dim. < Case 1 Lap dim. + 1"

Other Related Standards
SUP-BD(DT)-201

Notes:
1. Work with sheets 2 and 3 of 4.
2. For General Notes see Sht. No. 1 of 4.

APPROVAL	
R.S. Freedman DIRECTOR OFFICE OF STRUCTURES	
DATE: 11/25/95	
REVISIONS	
SHA	FHWA
FHWA APPROVAL	
DATE:	

STATE OF MARYLAND
DEPARTMENT OF TRANSPORTATION
STATE HIGHWAY ADMINISTRATION
OFFICE OF STRUCTURES

SPLICING OF BRIDGE DECK SLAB
TRUSS BARS DURING STAGE CONSTRUCTION
COUPLER BAR SPLICE ALTERNATIVES

STANDARD NO. SUP-BD(SC)-102 SHEET 4 OF 4

SUPER - BRIDGE DECK

OLD NO. BR-SS(6.31)-88-199

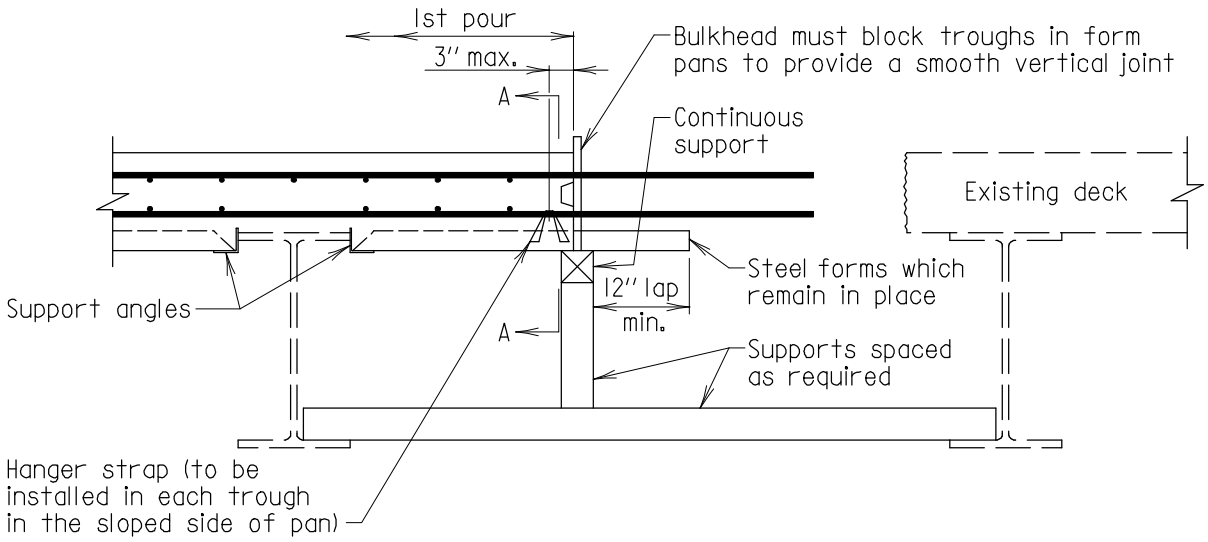

SECTION VIEW FOR 1st POUR

Scale: 1/2" = 1'-0"

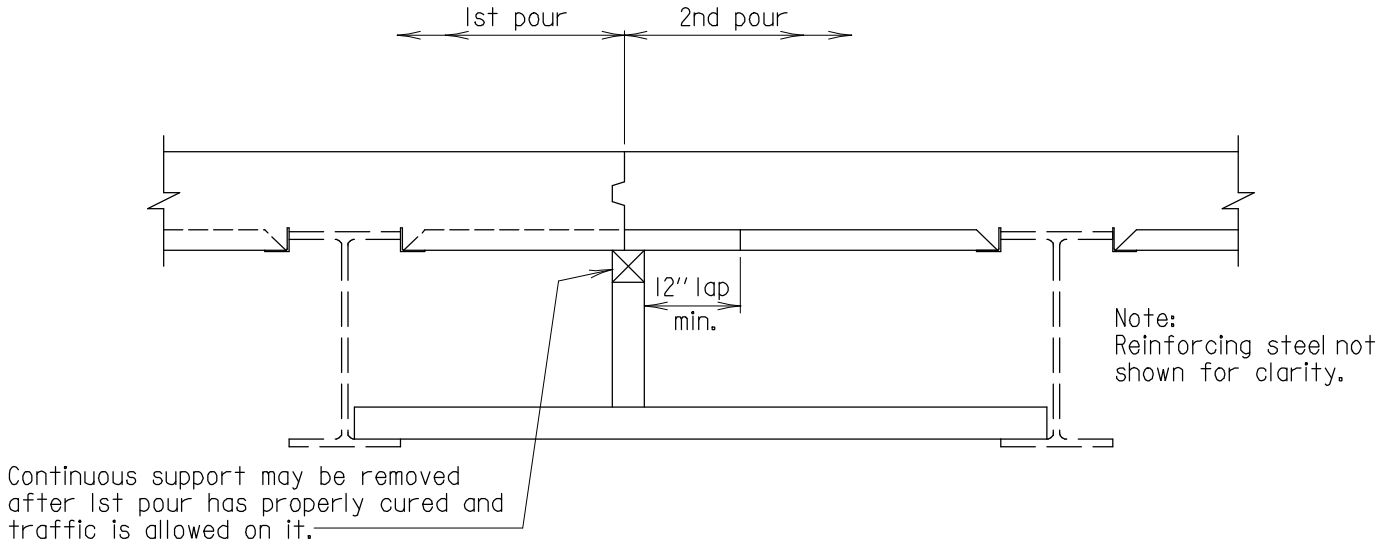

SECTION VIEW FOR 2nd POUR

Scale: 1/2" = 1'-0"

Notes:

1. This detail can be used in lieu of wood forms in spans where a longitudinal deck construction joint is located.
2. Hanger straps shall not deflect reinforcing from its proper position.

APPROVAL	
R.S. Freedman DIRECTOR OFFICE OF STRUCTURES DATE: 11/17/97	
REVISIONS	
SHA	FHWA
7-20-06	
FHWA APPROVAL	
DATE:	

STATE OF MARYLAND
DEPARTMENT OF TRANSPORTATION
STATE HIGHWAY ADMINISTRATION
OFFICE OF STRUCTURES

SPLIT PAN CONSTRUCTION FOR STEEL FORMS WHICH REMAIN IN PLACE

STANDARD NO. SUP-BD(SC)-103 SHEET 1 OF 2

SUPER - BRIDGE DECK

OLD NO. BR-SS(6.43)-97-319

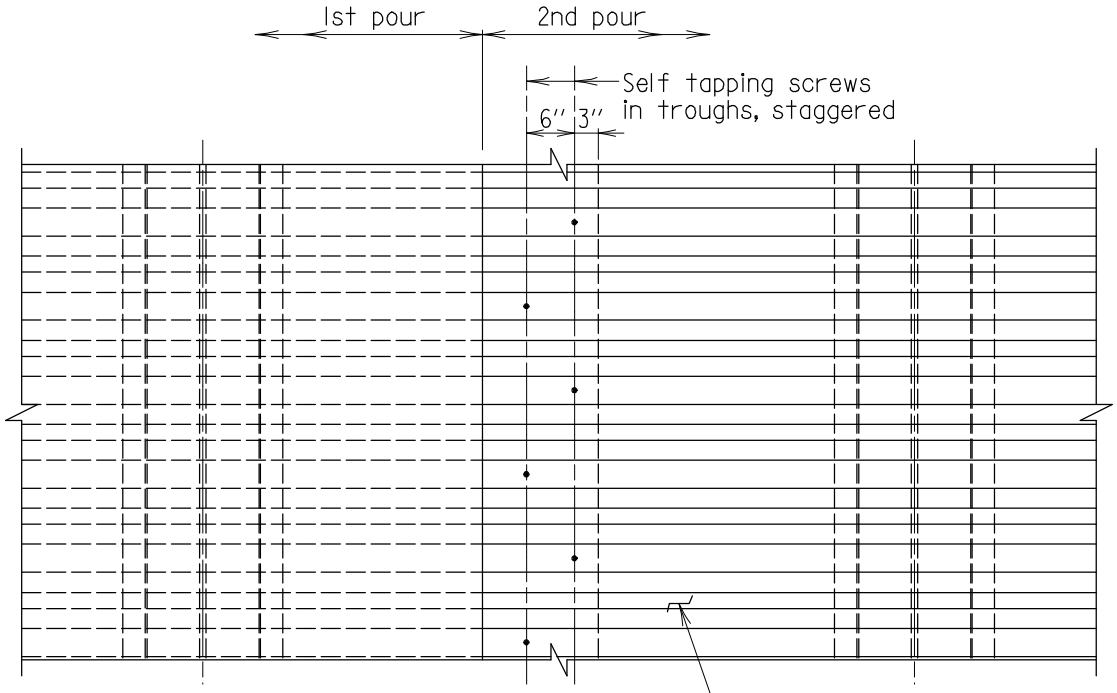

Note:
Reinforcing steel not
shown for clarity.

PLAN VIEW FOR SPLIT PLAN LAP

Scale: 1/2" = 1'-0"

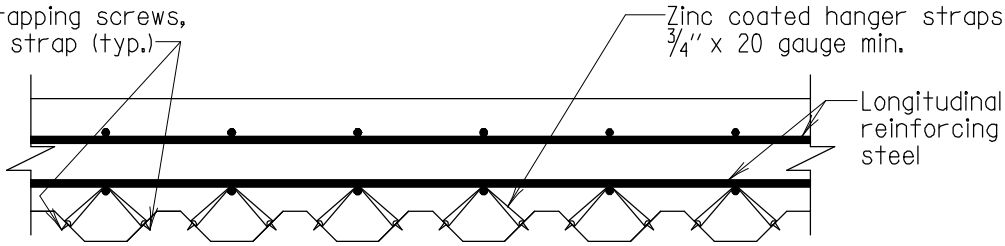

SECTION A-A AT HANGER STRAPS

Scale: 3/4" = 1'-0"

APPROVAL		
R.S. Freedman DIRECTOR OFFICE OF STRUCTURES DATE: 11/17/97		
REVISIONS		
SHA	FHWA	
7-20-06		
FHWA APPROVAL		
DATE:		

STATE OF MARYLAND
DEPARTMENT OF TRANSPORTATION
STATE HIGHWAY ADMINISTRATION
OFFICE OF STRUCTURES

SPLIT PAN CONSTRUCTION FOR
STEEL FORMS WHICH REMAIN IN PLACE

STANDARD NO. SUP-BD(SC)-103 SHEET 2 OF 2

SUPER - BRIDGE DECK

OLD NO. BR-SS(6.43)-97-319

SUPERSTRUCTURE

TRAFFIC BARRIERS

(SUP-TB)

SUPERSTRUCTURE

TRAFFIC BARRIERS

42” F-SHAPE

(SUP-TB(42F))

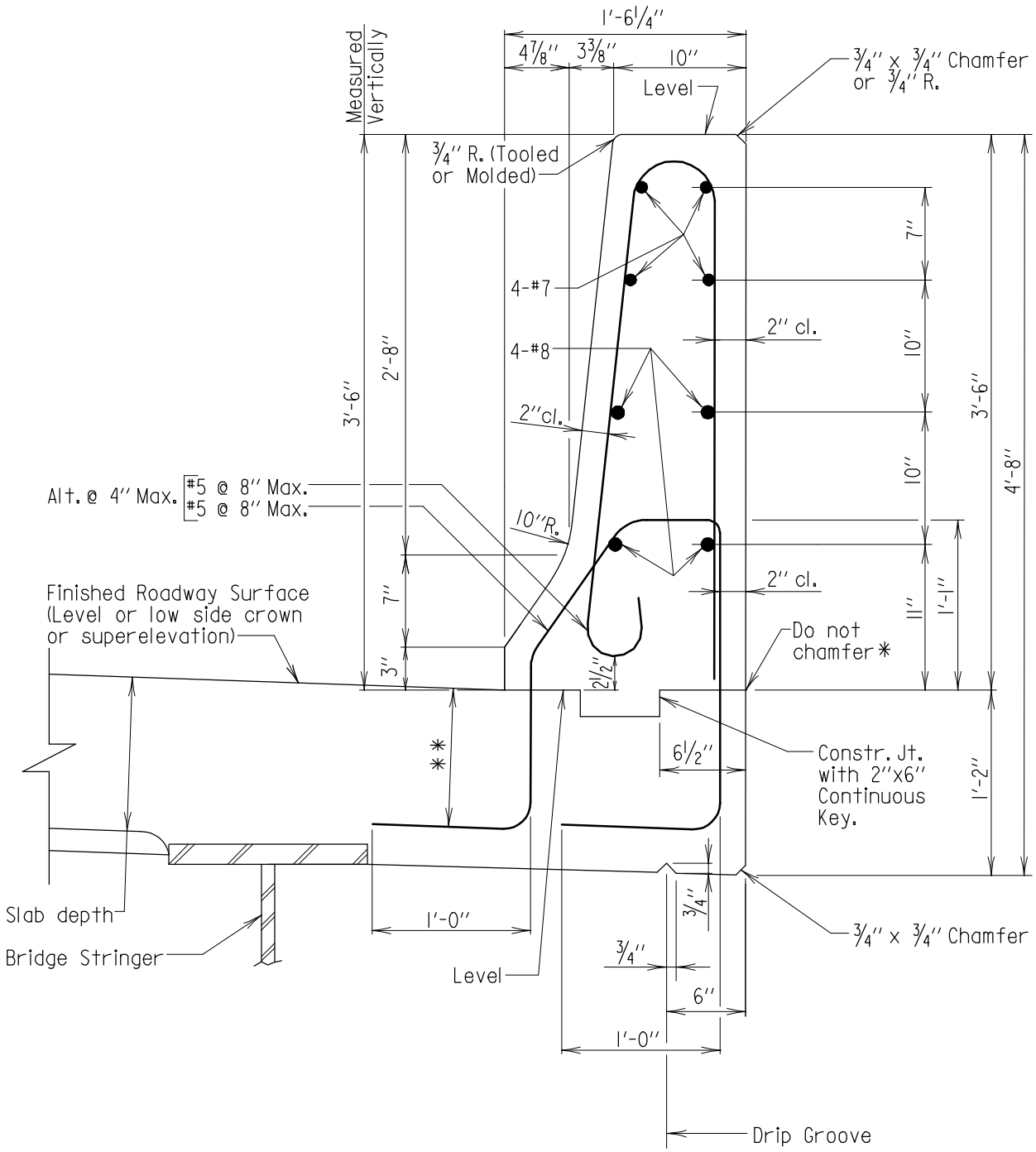

SECTION

Scale: 1" = 1'-0"

* In order to insure a smooth and acceptable surface, 420.03.11 (Construction joints) will be strictly adhered to.

** Slab depth minus 1".

Notes:

1. All #7 and #8 longitudinal bars shall be placed continuously in the parapet from expansion opening to expansion opening in a simple span bridge and expansion opening to centerline of pier in a multi span bridge.
2. Key is nominal size.
3. Front face of parapet to be dimensioned from a plumb line.
4. All reinforcing steel to be epoxy coated.
5. Concrete deck reinforcing steel not shown.

42" STRAIGHT BACK TL-5 BRIDGE RAILING

APPROVAL	
E.S. Freedman DIRECTOR OFFICE OF STRUCTURES	
DATE: 10/22/03	
REVISIONS	
SHA	FHWA
11-26-07	
FHWA APPROVAL	
DATE: 7-15-03	

STATE OF MARYLAND
DEPARTMENT OF TRANSPORTATION
STATE HIGHWAY ADMINISTRATION
OFFICE OF STRUCTURES

LEVEL OR LOW SIDE OF CROWN (OR SUPERELEVATED) SECTION OF 42" F-SHAPE PARAPET WITH STRAIGHT BACK

STANDARD NO. SUP-TB(42F)-101 SHEET 1 OF 2

SUPER - TRAFFIC BARRIERS

OLD NO. BR-SS(6.02)-03-27B

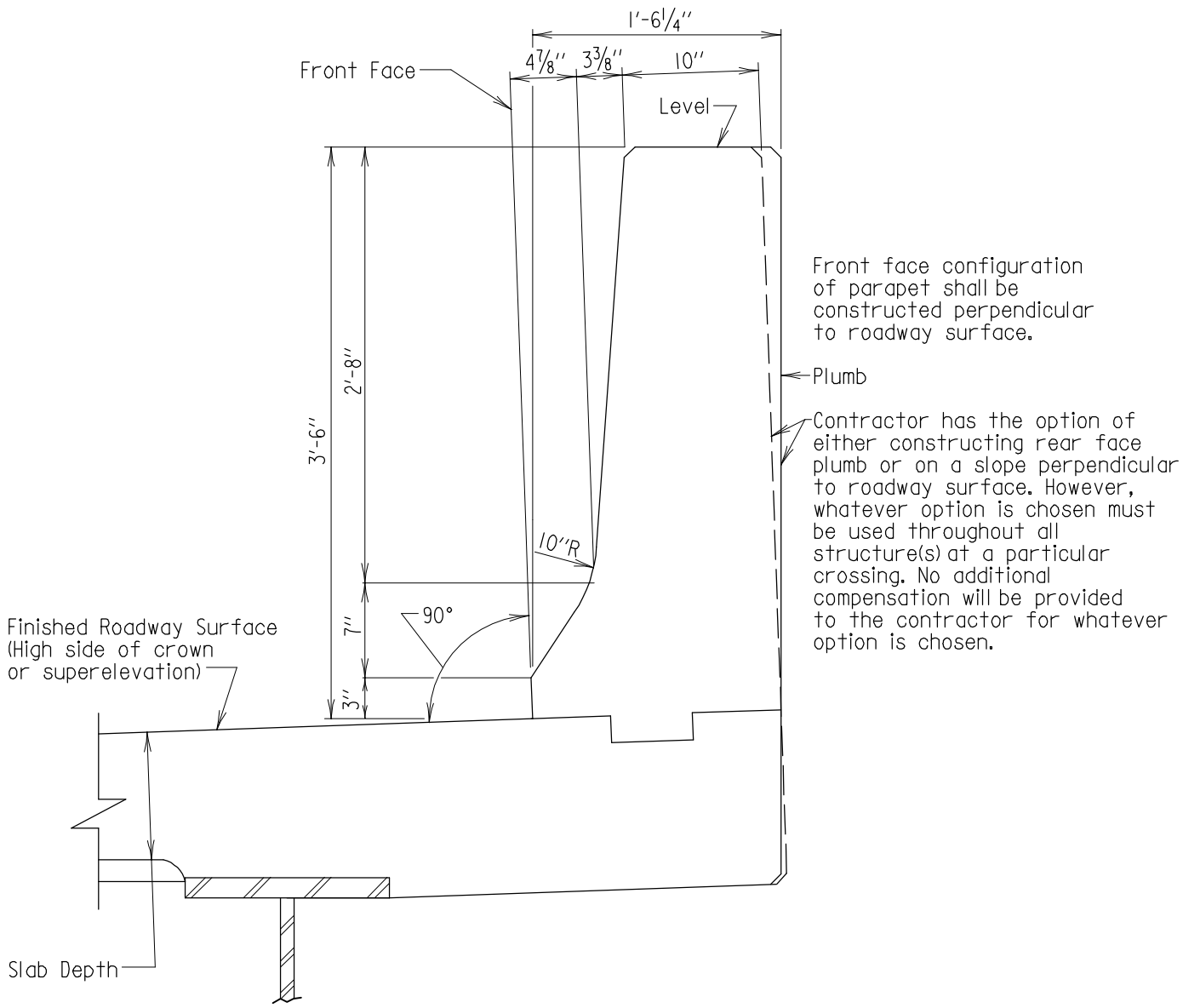

SECTION

Scale: 1" = 1'-0"

42" STRAIGHT BACK TL-5 BRIDGE RAILING

Note:
For all details not shown see sheet 1 of 2.

APPROVAL	
E.S. Freedman DIRECTOR OFFICE OF STRUCTURES	
DATE: 10/22/03	
REVISIONS	
SHA	FHWA
11-26-07	

FHWA APPROVAL	
DATE: 7-15-03	

STATE OF MARYLAND
DEPARTMENT OF TRANSPORTATION
STATE HIGHWAY ADMINISTRATION
OFFICE OF STRUCTURES

HIGH SIDE OF CROWN (OR SUPERELEVATED) SECTION OF 42" F-SHAPE PARAPET WITH STRAIGHT BACK

STANDARD NO. SUP-TB(42F)-101 SHEET 2 OF 2

SUPER - TRAFFIC BARRIER

OLD NO. BR-SS(6.02)-03-27B

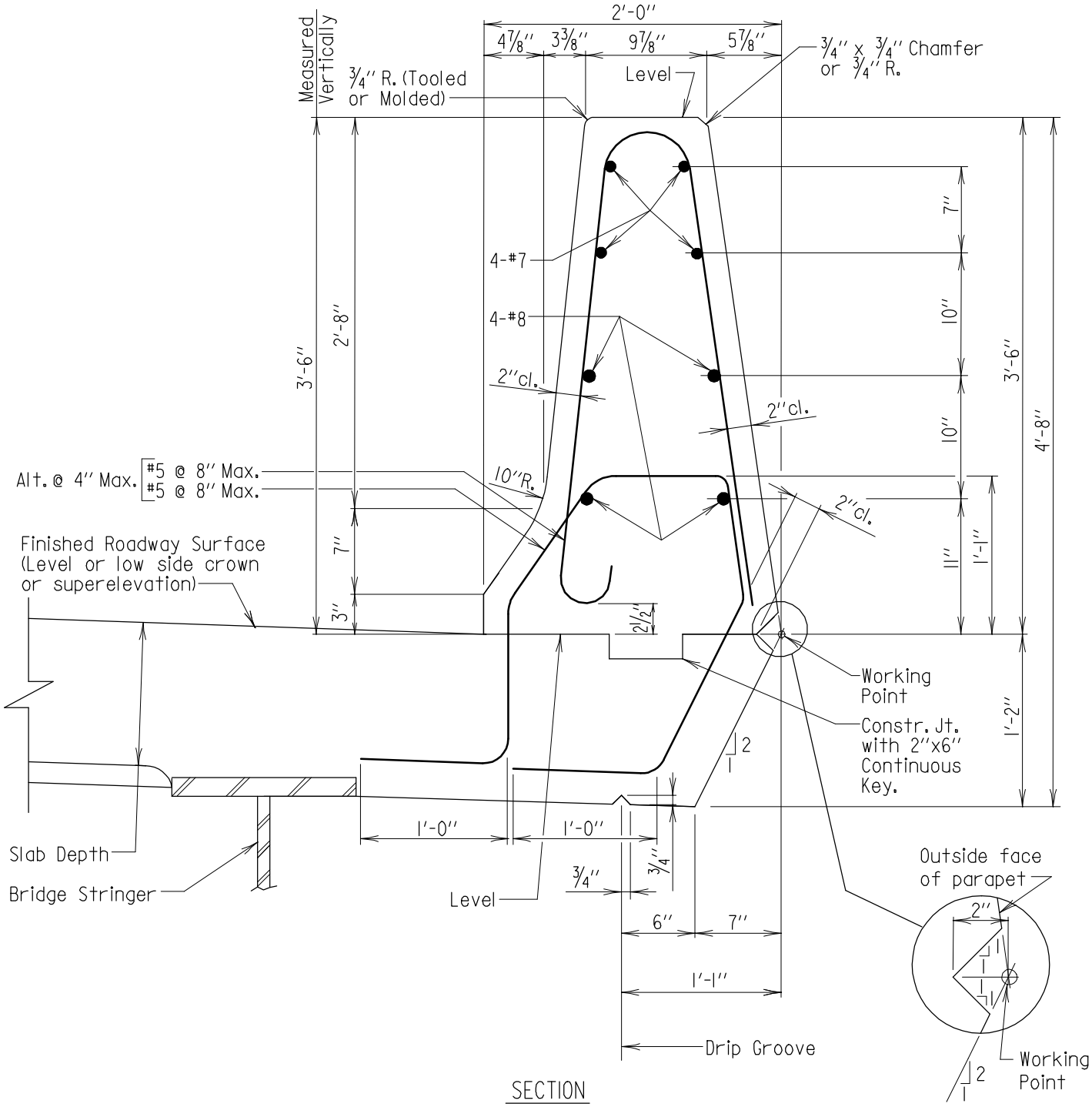

SECTION

Scale: 1" = 1'-0"

Notes:

1. All #7 and #8 longitudinal bars shall be placed continuously in the parapet from expansion opening to expansion opening in a simple span bridge and expansion opening to centerline of pier in a multi span bridge.
2. Key is nominal size.
3. Front face of parapet to be dimensioned from a plumb line.
4. All reinforcing steel to be epoxy coated.
5. Concrete deck reinforcing steel not shown.

42" DIAMOND BACK TL-5 BRIDGE RAILING

APPROVAL	
E.S. Freedman DIRECTOR OFFICE OF STRUCTURES	
DATE: 10/22/03	
REVISIONS	
SHA	FHWA
11-26-07	

FHWA APPROVAL
DATE: 7-15-03

STATE OF MARYLAND
DEPARTMENT OF TRANSPORTATION
STATE HIGHWAY ADMINISTRATION
OFFICE OF STRUCTURES

LEVEL OR LOW SIDE OF CROWN (OR SUPERELEVATED) SECTION OF 42" F-SHAPE PARAPET WITH DIAMOND BACK

STANDARD NO. SUP-TB(42F)-102 SHEET 1 OF 2

SUPERSTRUCTURE TRANSVERSE BEAM ORDER

OLD NO. BR-SS(6.25)-03-159B

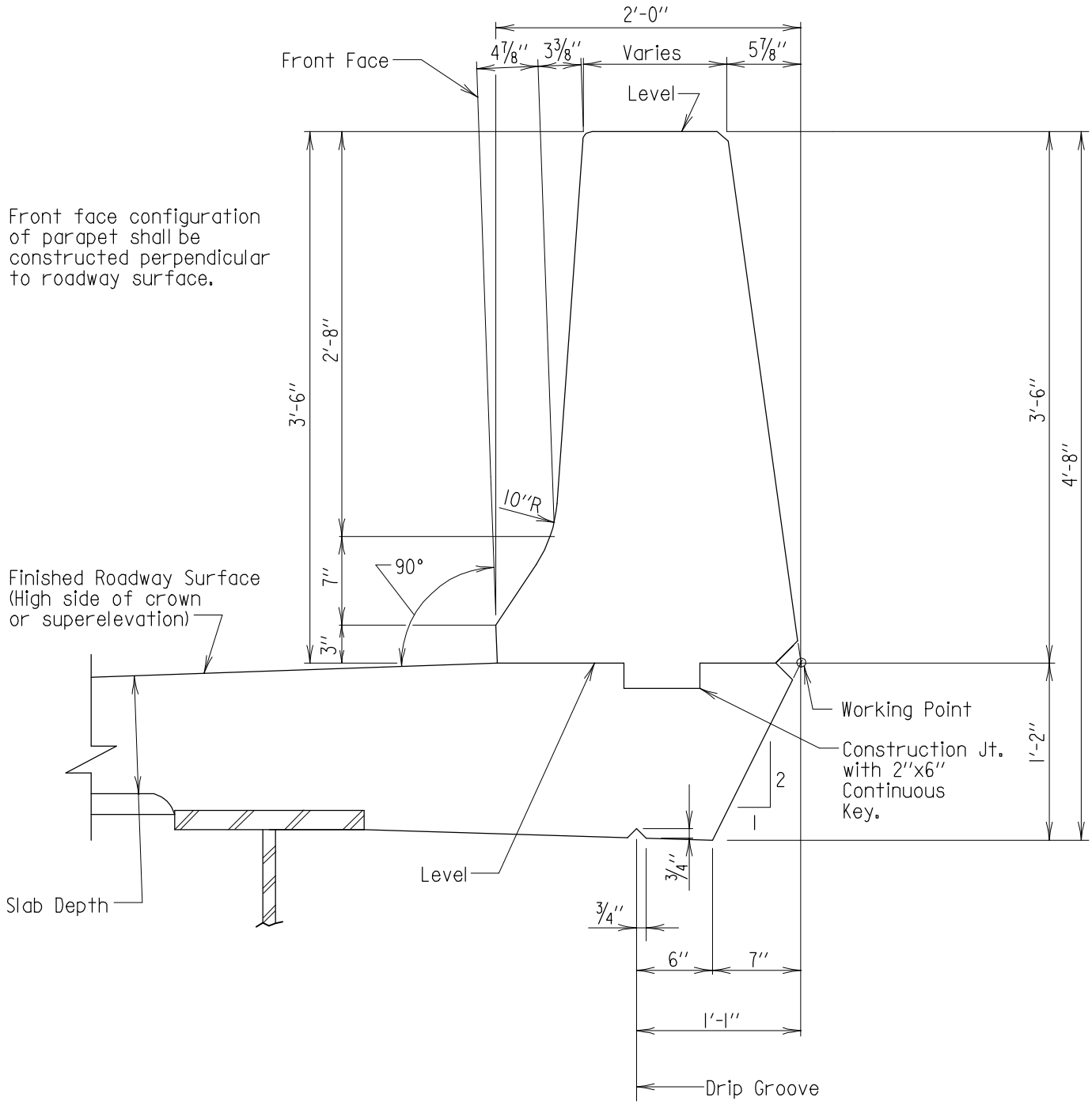

SECTION

Scale: 1" = 1'-0"

42" DIAMOND BACK TL-5 BRIDGE RAILING

Note:
For all details not shown see sheet 1 of 2.

APPROVAL	
E.S. Freedman DIRECTOR OFFICE OF STRUCTURES	
DATE: 10/22/03	
REVISIONS	
SHA	FHWA
12-29-03	
11-26-07	
FHWA APPROVAL	
DATE: 7-15-03	

STATE OF MARYLAND
DEPARTMENT OF TRANSPORTATION
STATE HIGHWAY ADMINISTRATION
OFFICE OF STRUCTURES

HIGH SIDE OF CROWN (OR SUPERELEVATED) SECTION OF 42" F-SHAPE PARAPET WITH DIAMOND BACK

STANDARD NO. SUP-TB(42F)-102 SHEET 2 OF 2

SUPER - TRAFFIC BARRIRE

OLD NO. BR-SS(6.25)-03-159B

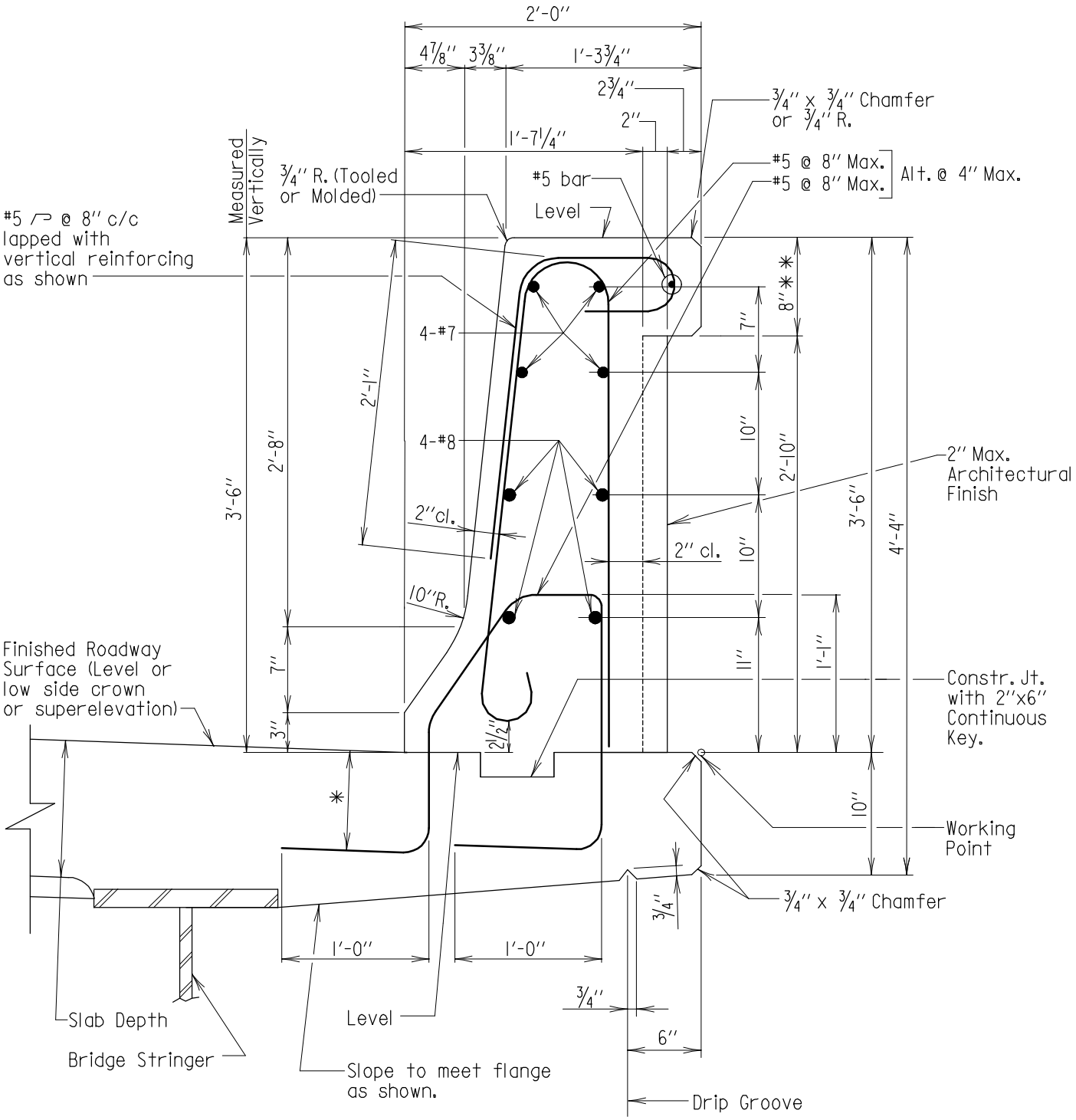

SECTION

Scale: 1" = 1'-0"

* Slab Depth - 1"

** This dimension can vary (1/2" ± max.) according to the form liner chosen. The Contractor must contact SHA Project Engineer to verify form liner and this dimension.

Notes:

1. All #5, #7 and #8 longitudinal bars shall be placed continuously in the parapet from expansion opening to expansion opening in a simple span bridge and expansion opening to centerline of pier in a multi span bridge.
2. Key is nominal size.
3. Front face of parapet to be dimensioned to a plumb line.
4. All reinforcing steel to be epoxy coated.
5. Concrete deck reinforcing steel not shown.

42" RECESSED BACK TL-5 BRIDGE RAILING

APPROVAL	
E.S. Freedman DIRECTOR OFFICE OF STRUCTURES	
DATE: 10/22/03	
REVISIONS	
SHA	FHWA
11-26-07	

FHWA APPROVAL
DATE: 7-15-03

STATE OF MARYLAND
DEPARTMENT OF TRANSPORTATION
STATE HIGHWAY ADMINISTRATION
OFFICE OF STRUCTURES

LEVEL OR LOW SIDE OF CROWN (OR SUPERELEVATED) SECTION OF 42" F-SHAPE PARAPET WITH ARCHITECTURAL FINISH

STANDARD NO. SUP-TB(42F)-103 SHEET 1 OF 2

SUPER - TRAFFIC BARRIER

OLD NO. BR-SS(6.47)-03-349B

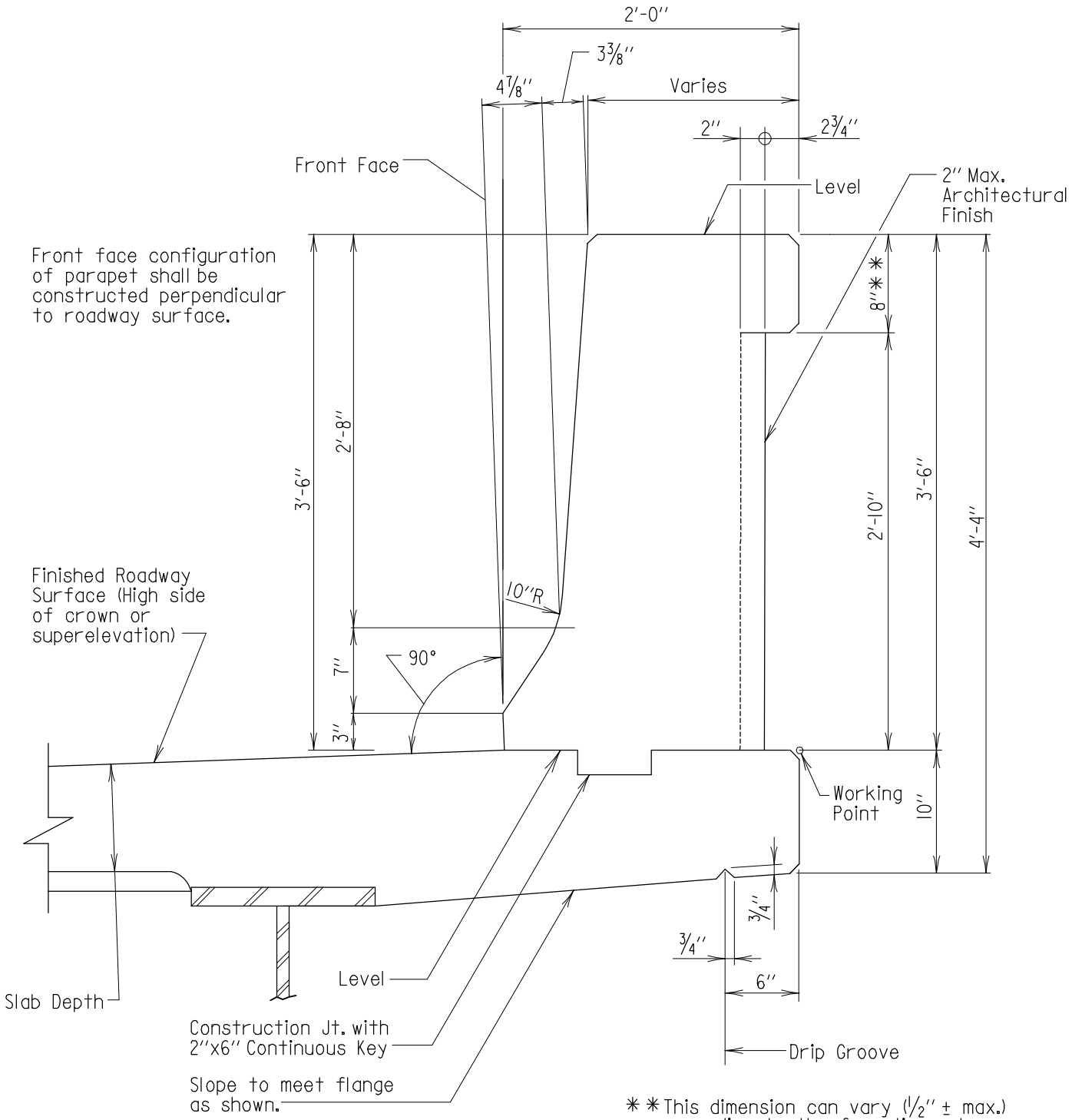

SECTION A

Scale: 1" = 1'-0"

** This dimension can vary (1/2" ± max.) according to the form liner chosen. The Contractor must contact SHA Project Engineer to verify form liner and this dimension.

42" RECESSED BACK TL-5 BRIDGE RAILING

Note:
For all details not shown see sheet 1 of 2.

APPROVAL	
E.S. Freedman DIRECTOR OFFICE OF STRUCTURES	
DATE: 10/22/03	
REVISIONS	
SHA	FHWA
11-26-07	

FHWA APPROVAL	
DATE: 7-15-03	

STATE OF MARYLAND
DEPARTMENT OF TRANSPORTATION
STATE HIGHWAY ADMINISTRATION
OFFICE OF STRUCTURES

HIGH SIDE OF CROWN (OR SUPERELEVATED) SECTION OF 42" F-SHAPE PARAPET WITH ARCHITECTURAL FINISH

STANDARD NO. SUP-TB(42F)-103 SHEET 2 OF 2

SUPER - TRAFFIC BARRIER

OLD NO. BR-SS(6.47)-03-349B

SUPERSTRUCTURE

TRAFFIC BARRIERS

42” F-SHAPE

(SUP-TB(42F))

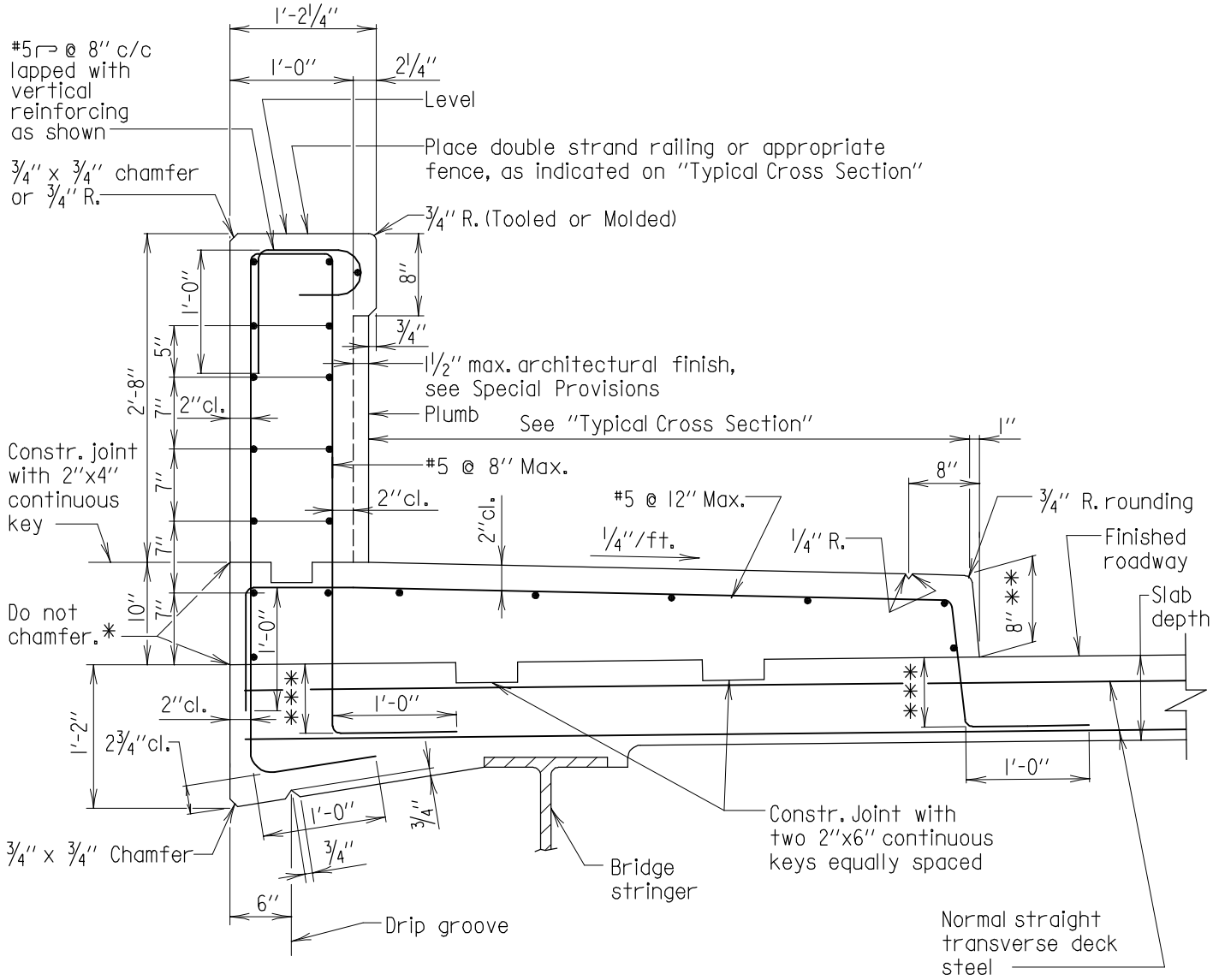

SECTION

Scale: ¾"=1'-0"

* In order to insure a smooth and acceptable surface, 420.03.11 (Constr. joints) shall be strictly adhered to.

** Unless otherwise indicated on "Typical Cross Section".

*** Slab Depth - 1"

Notes:

1. All longitudinal bars are #5 spaced as shown and shall be placed continuously in the parapet from expansion opening to expansion opening in a simple span bridge and expansion opening to centerline of pier in a multi span bridge.
2. All keys are nominal size.
3. Portions of normal longitudinal deck steel and truss bars are not shown.
4. All reinforcing steel to be epoxy coated.

SIDEWALK WITH STRAIGHT BACK

APPROVAL	
E.S. Freedman DIRECTOR OFFICE OF STRUCTURES	
DATE: 5/15/80	
REVISIONS	
SHA	FHWA
11-18-05	
11-26-07	
9-24-13	
8-18-14	

FHWA APPROVAL	
DATE: 7-29-80	

STATE OF MARYLAND
DEPARTMENT OF TRANSPORTATION
STATE HIGHWAY ADMINISTRATION
OFFICE OF STRUCTURES

LEVEL OR LOW SIDE OF CROWN (OR SUPERELEVATED) SECTION OF SIDEWALK AND PARAPET WITH STRAIGHT BACK

STANDARD NO. SUP-TB(SW)-101 SHEET 1 OF 2

SUPER - TRAFFIC BARRIER

OLD NO. BR-SS(6.21)-03-106

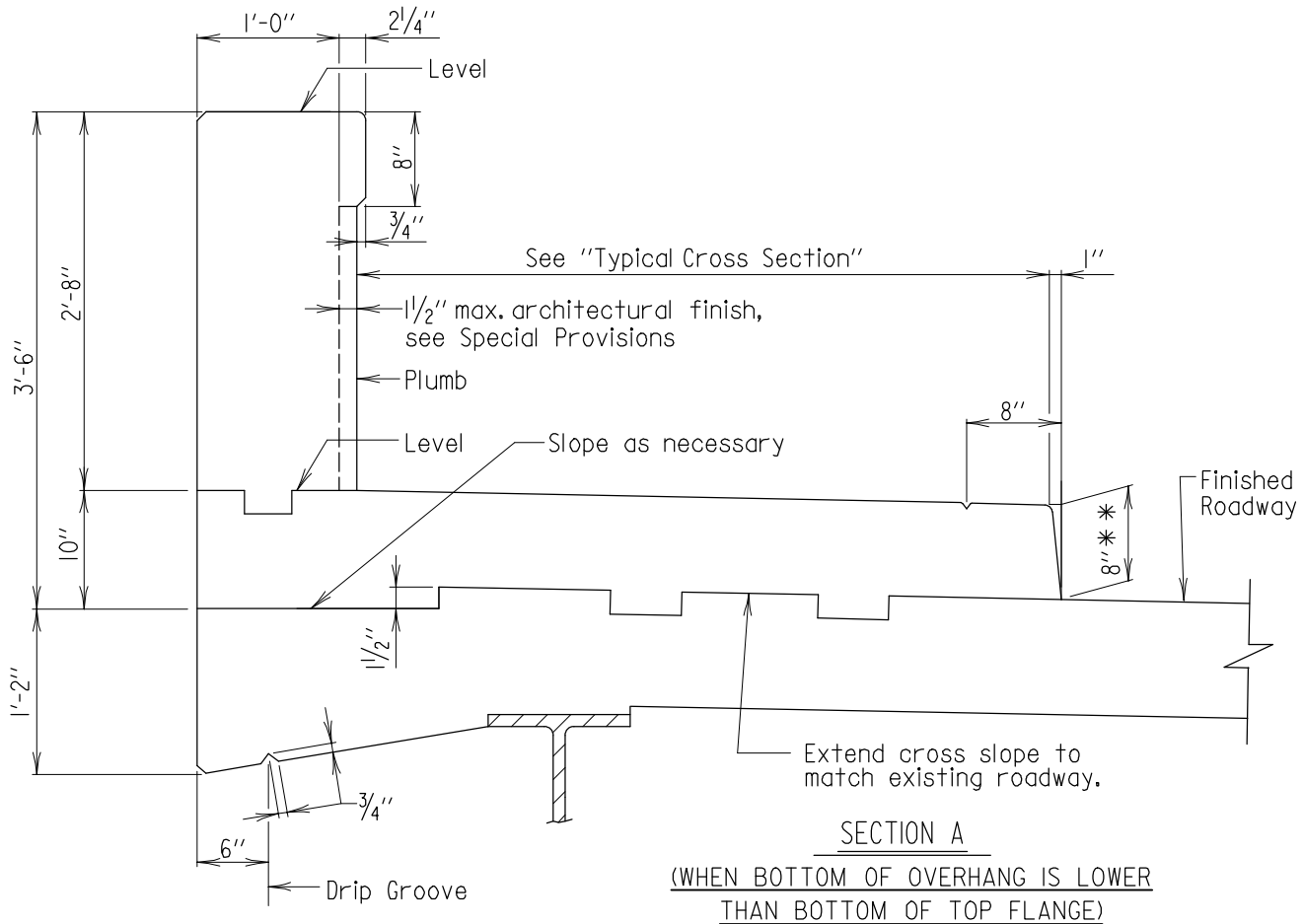

SECTION A

(WHEN BOTTOM OF OVERHANG IS LOWER THAN BOTTOM OF TOP FLANGE)

Scale: 3/4" = 1'-0"

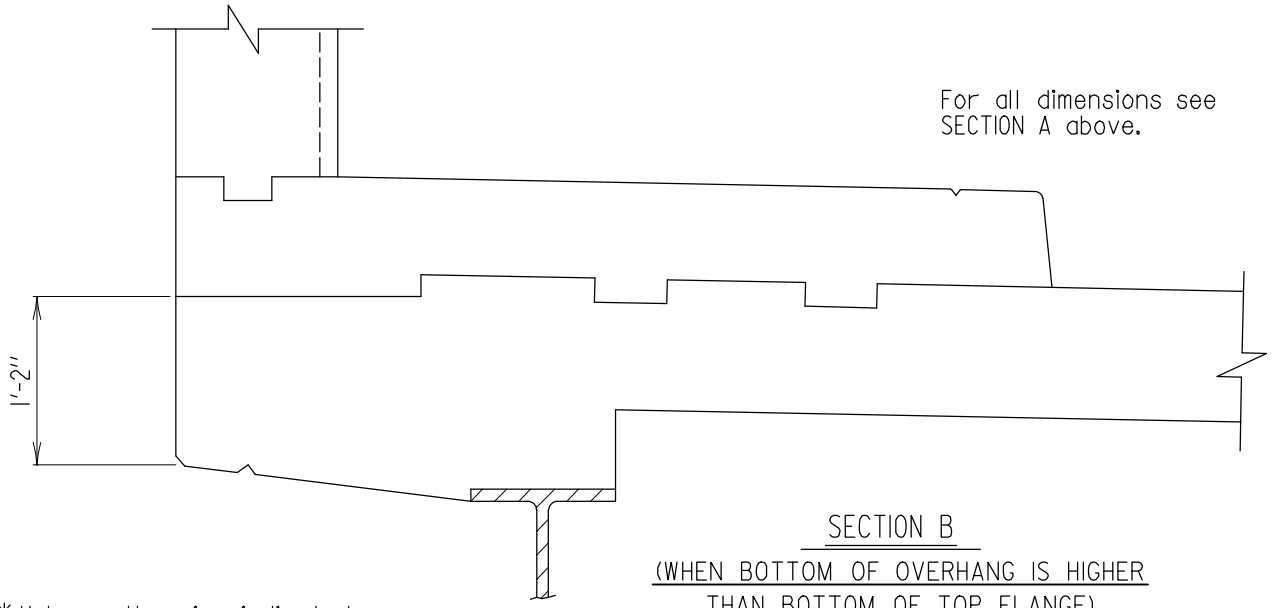

SECTION B

(WHEN BOTTOM OF OVERHANG IS HIGHER THAN BOTTOM OF TOP FLANGE)

Scale: 3/4" = 1'-0"

** Unless otherwise indicated on "Typical Cross Section".

SIDEWALK WITH STRAIGHT BACK

Note:
For all details not shown see sheet 1 of 2.

APPROVAL
E.S. Freedman DIRECTOR OFFICE OF STRUCTURES
DATE: 7/2/98

REVISIONS	
SHA	FHWA
10-22-03	
11-18-05	
9-24-13	

FHWA APPROVAL
DATE:

STATE OF MARYLAND
DEPARTMENT OF TRANSPORTATION
STATE HIGHWAY ADMINISTRATION
OFFICE OF STRUCTURES

HIGH SIDE OF CROWN (OR SUPERELEVATED) SECTION OF SIDEWALK AND PARAPET WITH STRAIGHT BACK

STANDARD NO. SUP-TB(SW)-101 SHEET 2 OF 2

SUPER - TRAFFIC BARRIER

OLD NO. BR-SS(6.21)-03-106

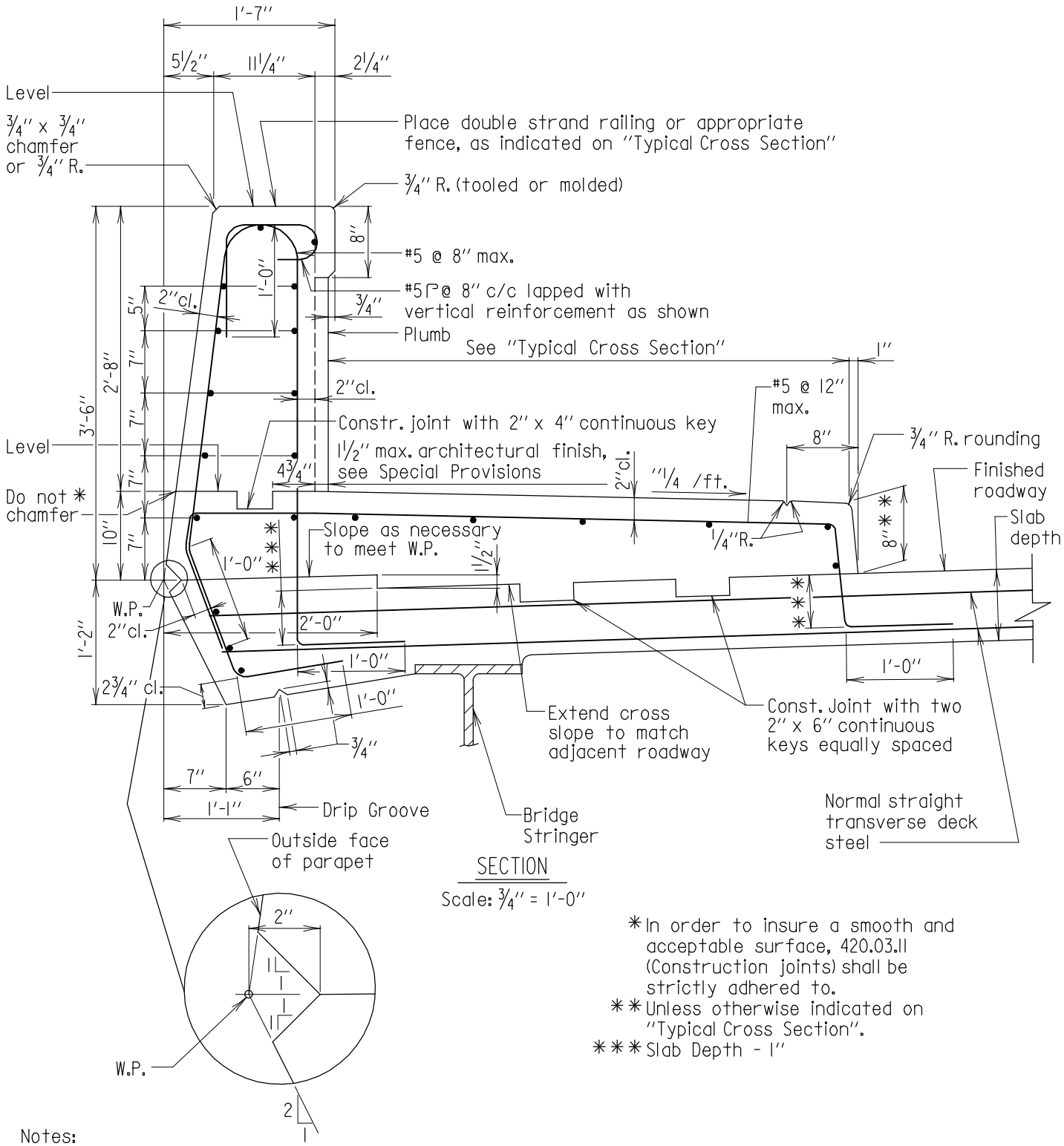

* In order to insure a smooth and acceptable surface, 420.03.11 (Construction joints) shall be strictly adhered to.

** Unless otherwise indicated on "Typical Cross Section".

*** Slab Depth - 1"

Notes:

1. All longitudinal bars are #5 spaced as shown and shall be placed continuously in the parapet from expansion opening to expansion opening in a simple span bridge and expansion opening to centerline of pier in a multi span bridge.
2. All keys are nominal size.
3. Portions of normal longitudinal deck steel and truss bars are not shown.
4. W.P. = Working Point.
5. All reinforcing steel to be epoxy coated.

SIDEWALK WITH DIAMOND BACK

APPROVAL	
E.S. Freedman DIRECTOR OFFICE OF STRUCTURES	
DATE: 7/31/84	
REVISIONS	
SHA	FHWA
11-18-05	
11-26-07	
9-24-13	
8-18-14	

FHWA APPROVAL	
DATE: 11-8-84	

STATE OF MARYLAND
DEPARTMENT OF TRANSPORTATION
STATE HIGHWAY ADMINISTRATION
OFFICE OF STRUCTURES

LEVEL OR LOW SIDE OF CROWN (OR SUPERELEVATED) SECTION OF SIDEWALK AND PARAPET WITH DIAMOND BACK

STANDARD NO. SUP-TB(SW)-102 SHEET 1 OF 2

SUPER - TRAFFIC BARRIER

OLD NO. BR-SS(6.26)-03-161

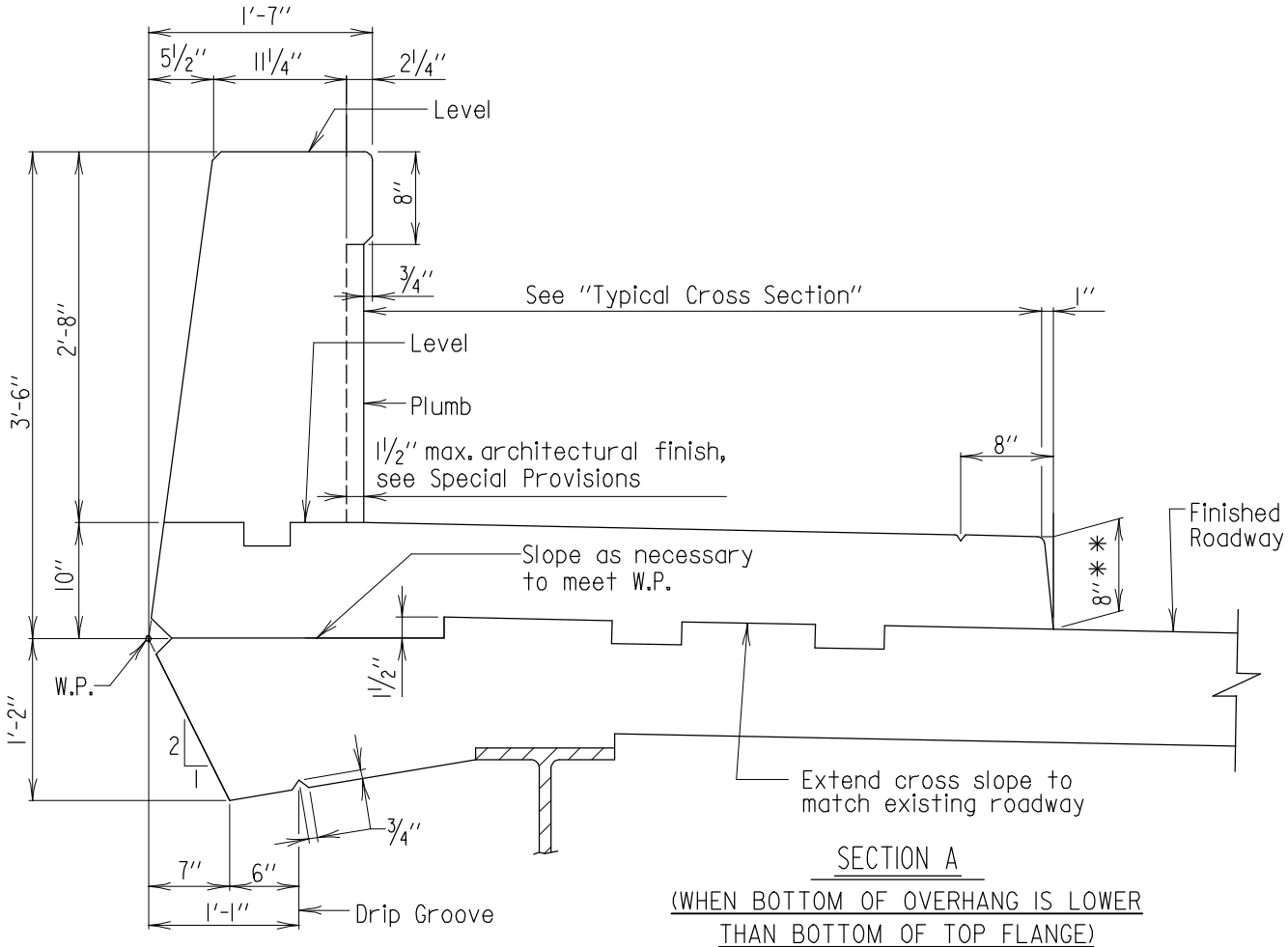

SECTION A

(WHEN BOTTOM OF OVERHANG IS LOWER THAN BOTTOM OF TOP FLANGE)

Scale: 3/4" = 1'-0"

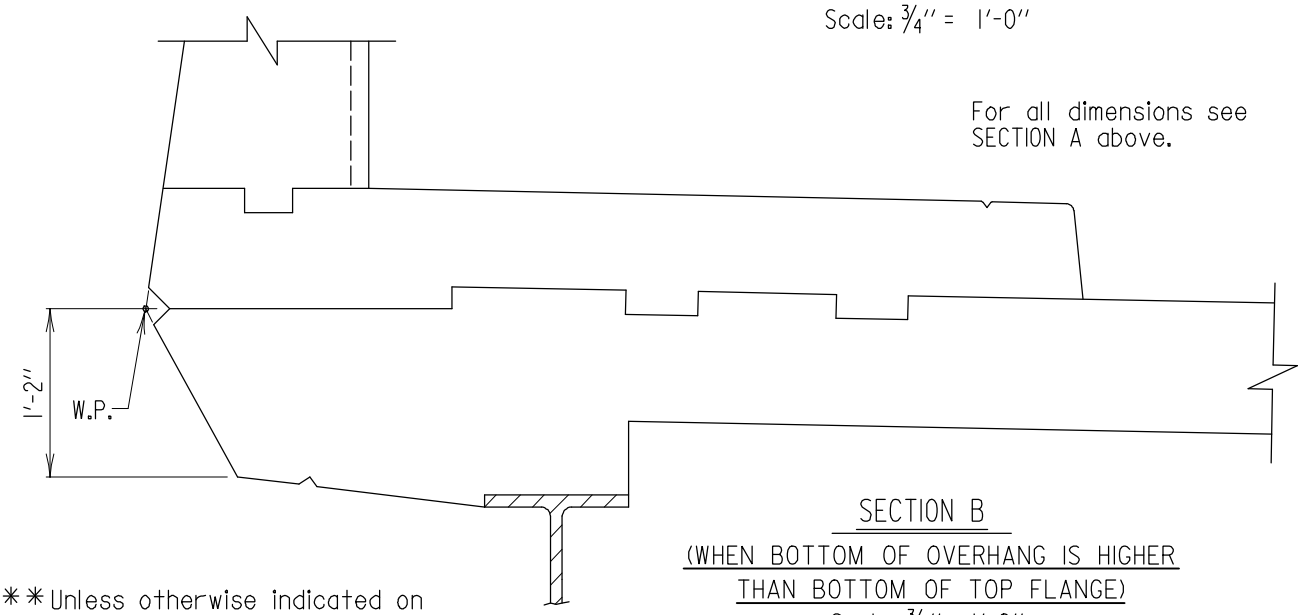

For all dimensions see SECTION A above.

SECTION B

(WHEN BOTTOM OF OVERHANG IS HIGHER THAN BOTTOM OF TOP FLANGE)

Scale: 3/4" = 1'-0"

** Unless otherwise indicated on "Typical Cross Section".

SIDEWALK WITH DIAMOND BACK

Note:
For all details not shown see sheet 1 of 2.

APPROVAL	
E.S. Freedman DIRECTOR OFFICE OF STRUCTURES	
DATE: 5/11/90	
REVISIONS	
SHA	FHWA
10-22-03	
11-18-05	
9-24-13	
8-18-14	

FHWA APPROVAL
DATE:

STATE OF MARYLAND
DEPARTMENT OF TRANSPORTATION
STATE HIGHWAY ADMINISTRATION
OFFICE OF STRUCTURES

HIGH SIDE OF CROWN (OR SUPERELEVATED)
SECTION OF SIDEWALK AND PARAPET WITH DIAMOND BACK

STANDARD NO. SUP-TB(SW)-102 SHEET 2 OF 2

SUPER - TRAFFIC BARRIER

OLD NO. BR-SS(6.26)-03-161

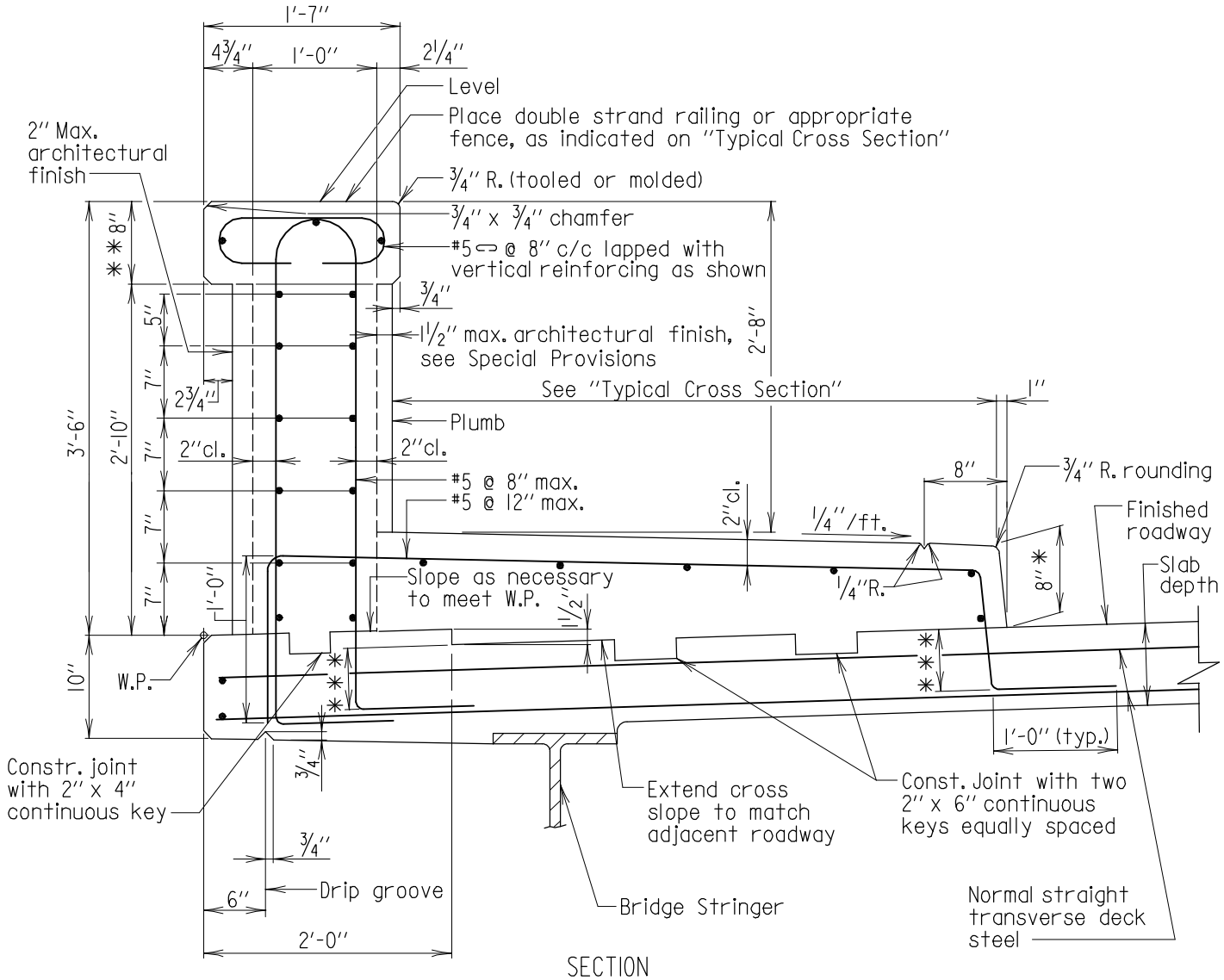

SECTION

Scale: 3/4" = 1'-0"

* Unless otherwise indicated on "Typical Cross Section".

** This dimension can vary (1/2" ± max.) according to the form liner chosen. The Contractor must contact SHA Project Engineer to verify form liner and this dimension.

*** Slab Depth - 1"

Notes:

1. All longitudinal bars are #5 spaced as shown and shall be placed continuously in the parapet from expansion opening to expansion opening in a simple span bridge and expansion opening to centerline of pier in a multi span bridge.
2. All keys are nominal size.
3. Portions of normal longitudinal deck steel and truss bars are not shown.
4. W.P. = Working Point.
5. All reinforcing steel to be epoxy coated.

SIDEWALK WITH RECESSED BACK

APPROVAL	
E.S. Freedman DIRECTOR OFFICE OF STRUCTURES	
DATE: 10/22/03	
REVISIONS	
SHA	FHWA
11-18-05	
11-26-07	
9-24-13	
8-18-14	

FHWA APPROVAL	
DATE:	

STATE OF MARYLAND
DEPARTMENT OF TRANSPORTATION
STATE HIGHWAY ADMINISTRATION
OFFICE OF STRUCTURES

LEVEL OR LOW SIDE OF CROWN (OR SUPERELEVATED) SECTION OF SIDEWALK AND PARAPET WITH ARCHITECTURAL FINISH

STANDARD NO. SUP-TB(SW)-103 SHEET 1 OF 2

SUPER TRAFFIC BARRIER

OLD NO. BR-SS(6.48)-03-350

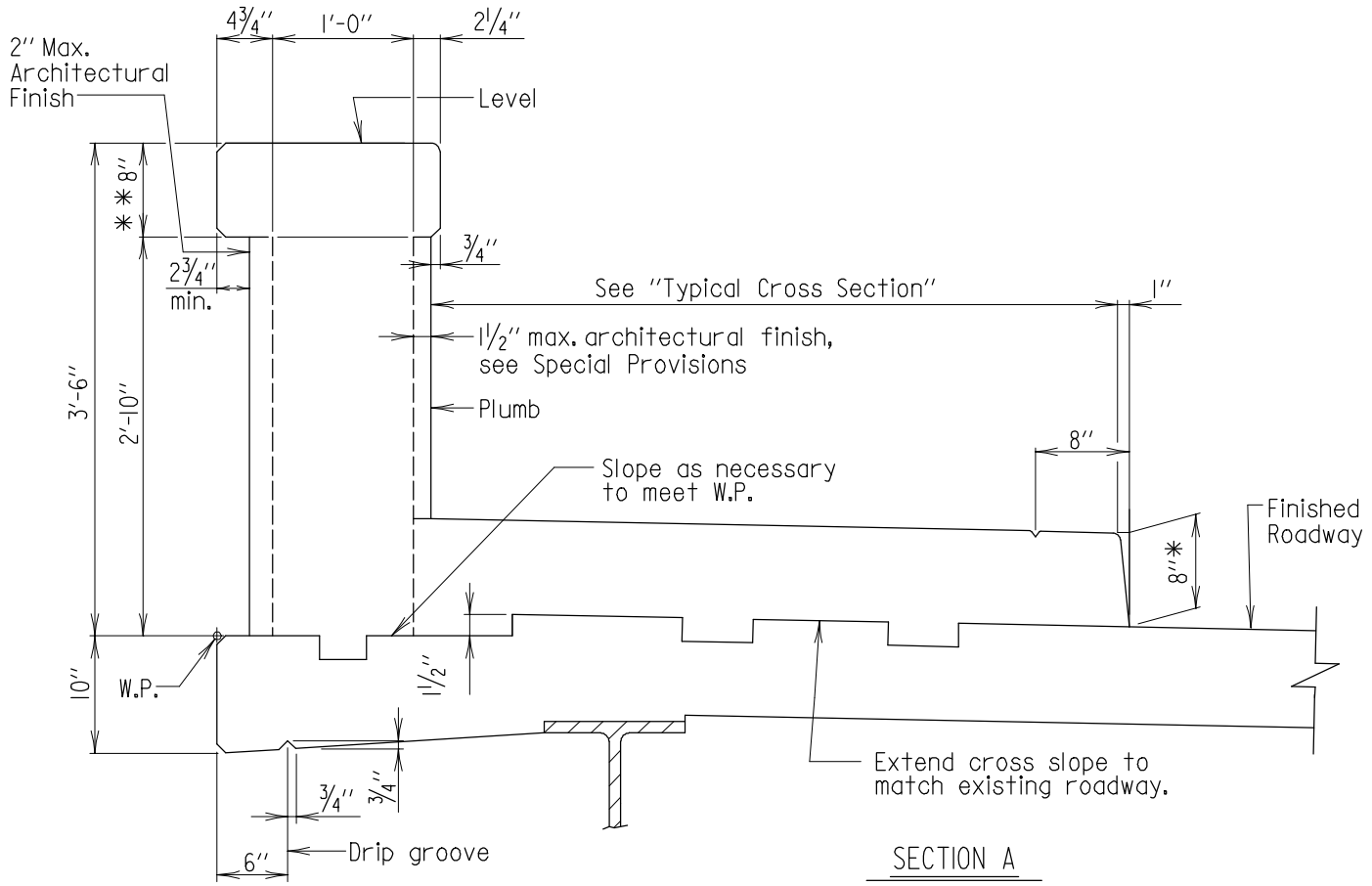

SECTION A

(WHEN BOTTOM OF OVERHANG IS LOWER THAN BOTTOM OF TOP FLANGE)

Scale: 3/4" =1'-0"

For all dimensions see SECTION A above.

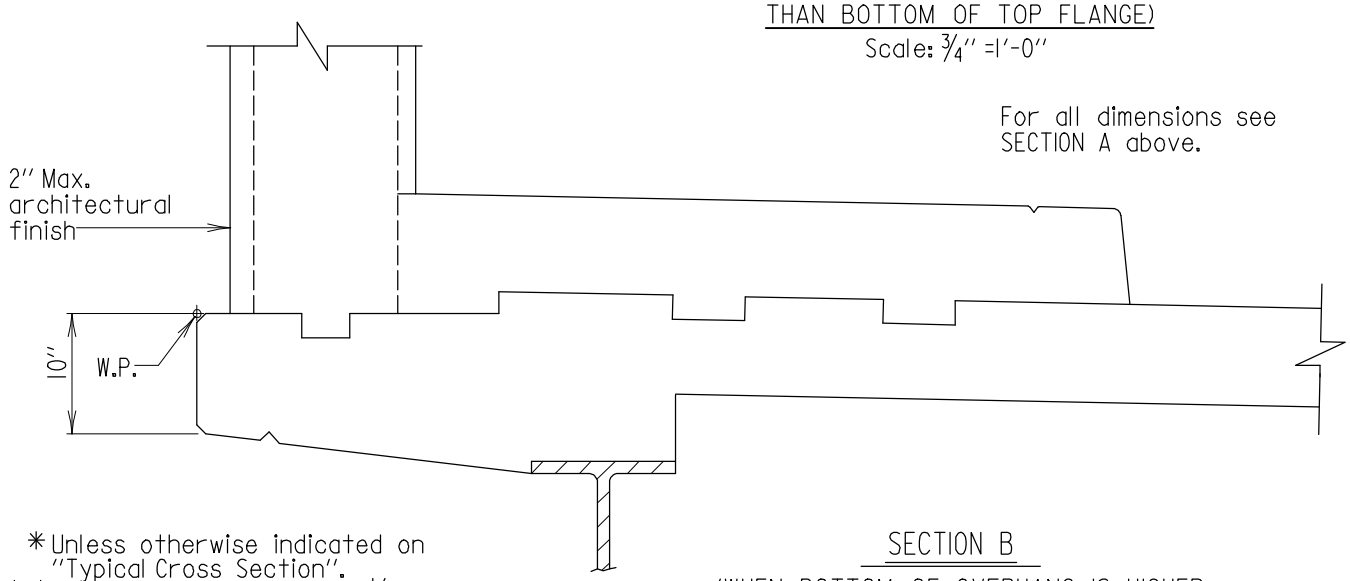

SECTION B

(WHEN BOTTOM OF OVERHANG IS HIGHER THAN BOTTOM OF TOP FLANGE)

Scale: 3/4" =1'-0"

* Unless otherwise indicated on "Typical Cross Section".

** This dimension can vary (1/2" ± max.) according to the form liner chosen. The Contractor must contact SHA Project Engineer to verify form liner and this dimension.

SIDEWALK WITH RECESSED BACK

Note:
For all details not shown see sheet 1 of 2.

APPROVAL	
E.S. Freedman DIRECTOR OFFICE OF STRUCTURES	
DATE: 10/22/03	
REVISIONS	
SHA	FHWA
9-24-13	
8-18-14	
FHWA APPROVAL	
DATE:	

STATE OF MARYLAND
DEPARTMENT OF TRANSPORTATION
STATE HIGHWAY ADMINISTRATION
OFFICE OF STRUCTURES

HIGH SIDE OF CROWN (OR SUPERELEVATED) SECTION OF SIDEWALK AND PARAPET WITH ARCHITECTURAL FINISH

STANDARD NO. SUP-TB(SW)-103 SHEET 2 OF 2

SUPER TRAFFIC BARRIER

OLD NO. BR-SS(6.48)-03-350

SUPERSTRUCTURE

TRAFFIC BARRIERS

TUBE RAIL

(SUP-TB(TR))

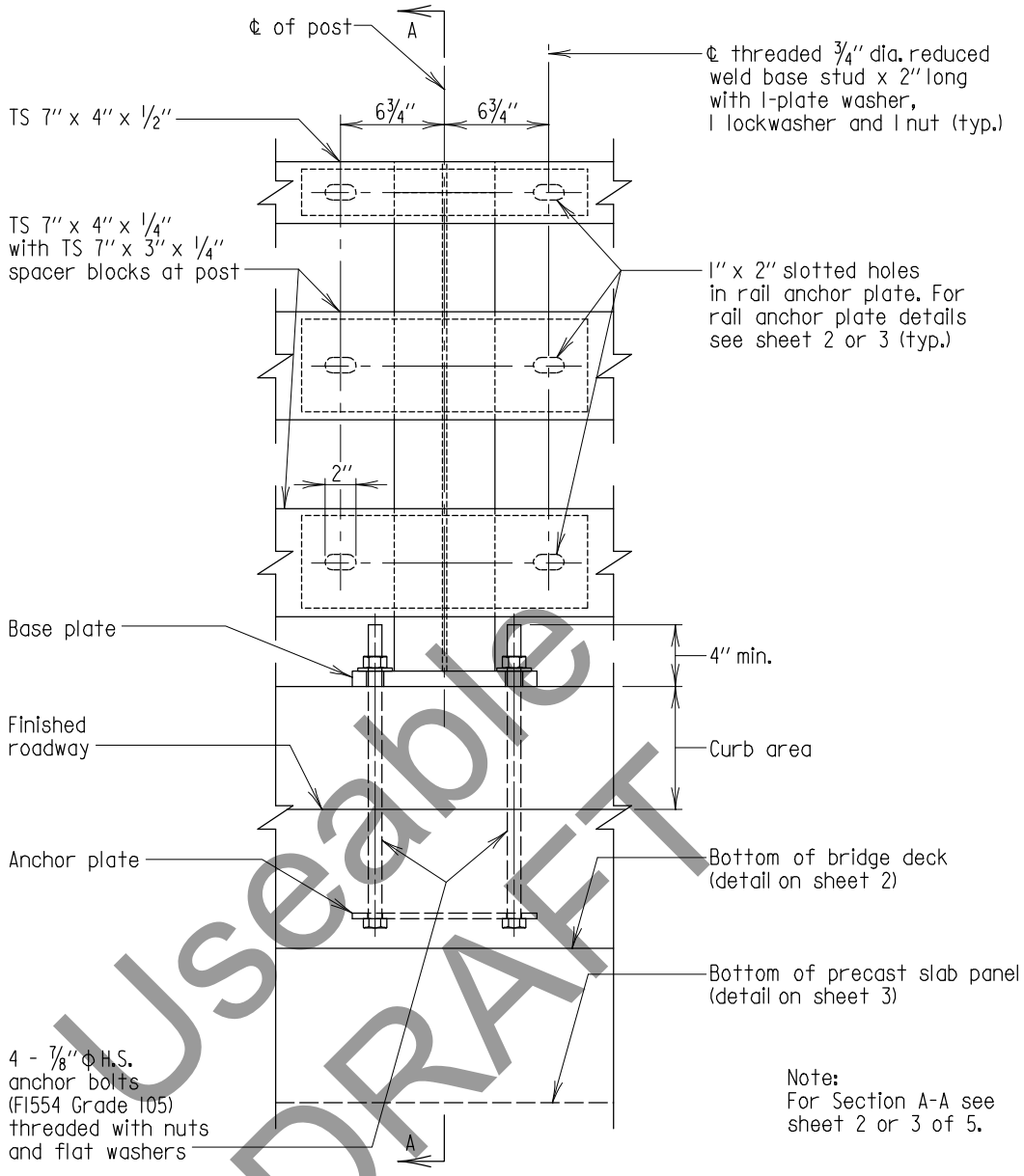

ELEVATION

Scale: 1" = 1'-0"

Useable DRAFT

GENERAL NOTES:

1. All railings shall be fabricated and erected as indicated on the Plans.
2. Rails shall be parallel to the grade of the roadway. Rail sections shall be attached to as many posts as possible, but not less than two.
3. The center line of any splice and/or expansion joint shall be located at least 2'-0" away from center line of a post except where indicated otherwise on Plans. Expansion and/or splice joints for each strand of three strand railing shall be placed in the same location and in the same panel.
4. Rail elements shall be structural tubing in accordance with ASTM A500 Grade B, A618 or A501.
5. Steel posts and plates shall conform to ASTM A36 unless otherwise noted.
6. Posts shall be set perpendicular to top of curb. For post spacing see Plans (Maximum 10'-0" Spacing).
7. All structural steel including fasteners shall be hot-dip galvanized as per ASTM A-123 after fabrication, except as noted. All anchor plates shall be attached before galvanizing.
8.
9. IN SETTING ANCHOR BOLTS BE SURE ENOUGH THREADS ARE EXPOSED SO THAT NUTS CAN BE COMPLETELY ATTACHED (4" MIN.).

TL–4 BRIDGE RAILING

* USEABLE DRAFT *

Note:
For anchor bolt length and curb reinforcing details see standard no. SUP-TB(TR)-201 for bridge decks or SUP-TB(TR)-301 for precast slab panels.

APPROVAL
_____ DIRECTOR OFFICE OF STRUCTURES
DATE: 09/01/15

REVISIONS	
SHA	FHWA

FHWA APPROVAL
DATE:

STATE OF MARYLAND
DEPARTMENT OF TRANSPORTATION
STATE HIGHWAY ADMINISTRATION
OFFICE OF STRUCTURES

THREE STRAND STRUCTURAL TUBE RAIL
CURB MOUNTED - ELEVATION

NO. SUP-TB(TR)-101 SHEET 1 OF 5

SUPER TRAFFIC BARRIER

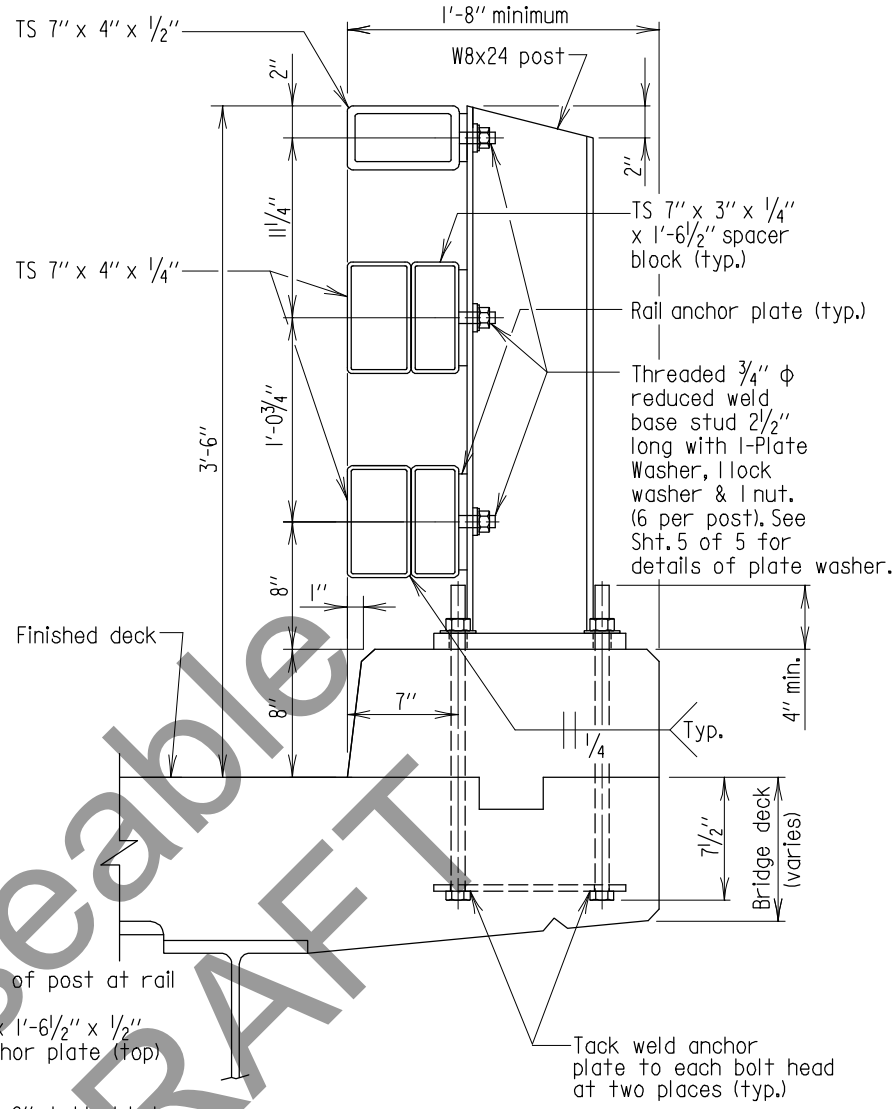

SECTION A-A (BRIDGE DECK)

Scale: 1" = 1'-0"

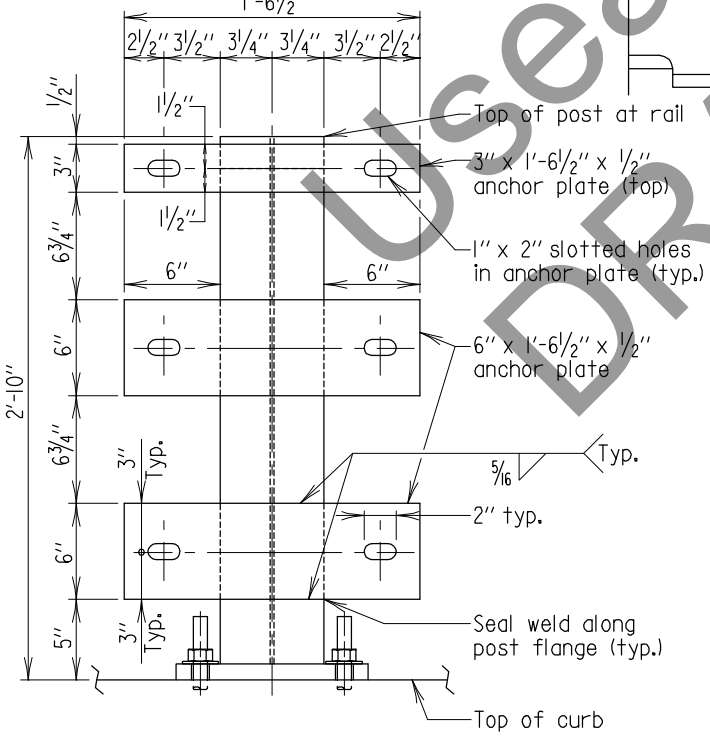

ELEVATION - RAIL ANCHOR PLATE DETAIL

Scale: 1" = 1'-0"

Useable DRAFT

TL-4 BRIDGE RAILING

* USEABLE DRAFT *

APPROVAL	
_____ DIRECTOR OFFICE OF STRUCTURES DATE: 09/01/15	
REVISIONS	
SHA	FHWA

FHWA APPROVAL
DATE:

STATE OF MARYLAND
DEPARTMENT OF TRANSPORTATION
STATE HIGHWAY ADMINISTRATION
OFFICE OF STRUCTURES

THREE STRAND STRUCTURAL TUBE RAIL
CURB MOUNTED - DETAILS
CONCRETE BRIDGE DECK MOUNTED

NO. SUP-TB(TR)-101 SHEET 2 OF 5

SUPER TRAFFIC BARRIER

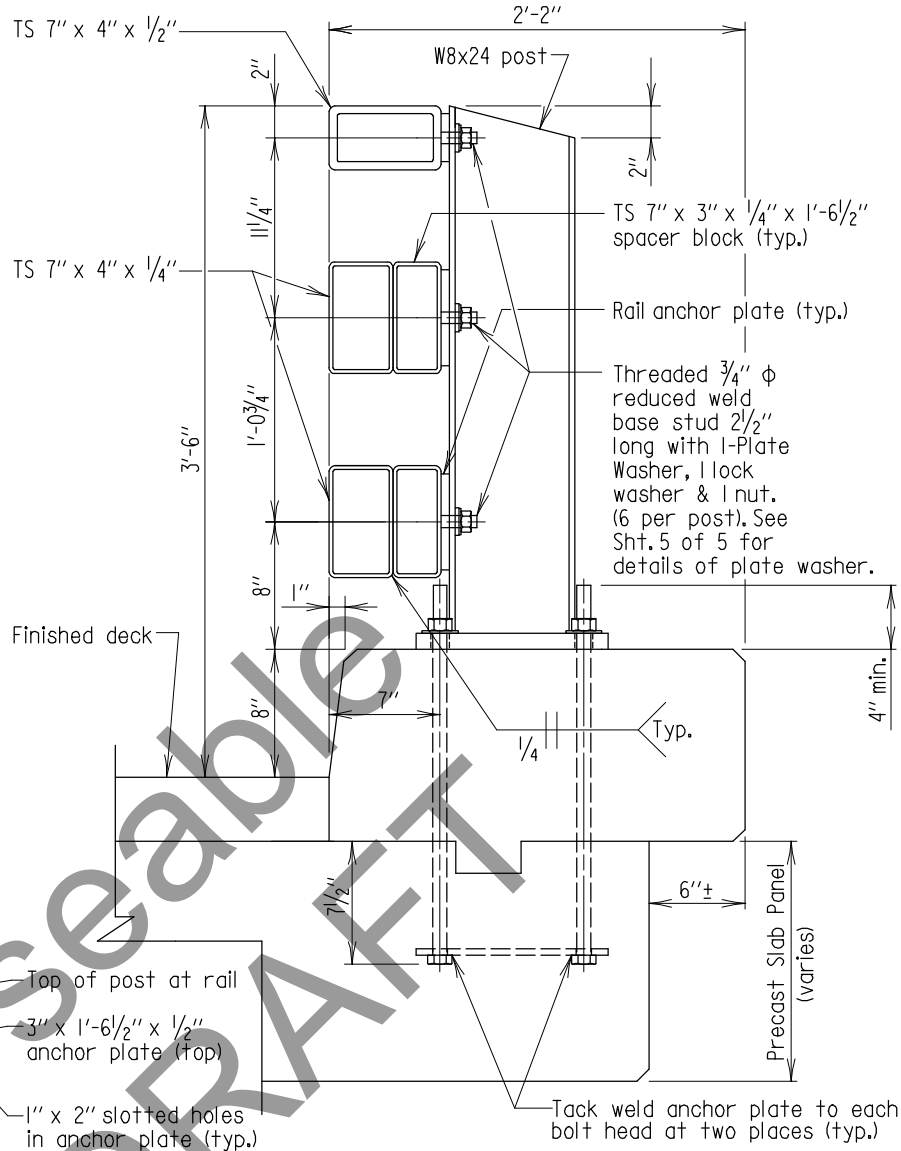

SECTION A-A (PRECAST SLAB PANEL)

Scale: 1" = 1'-0"

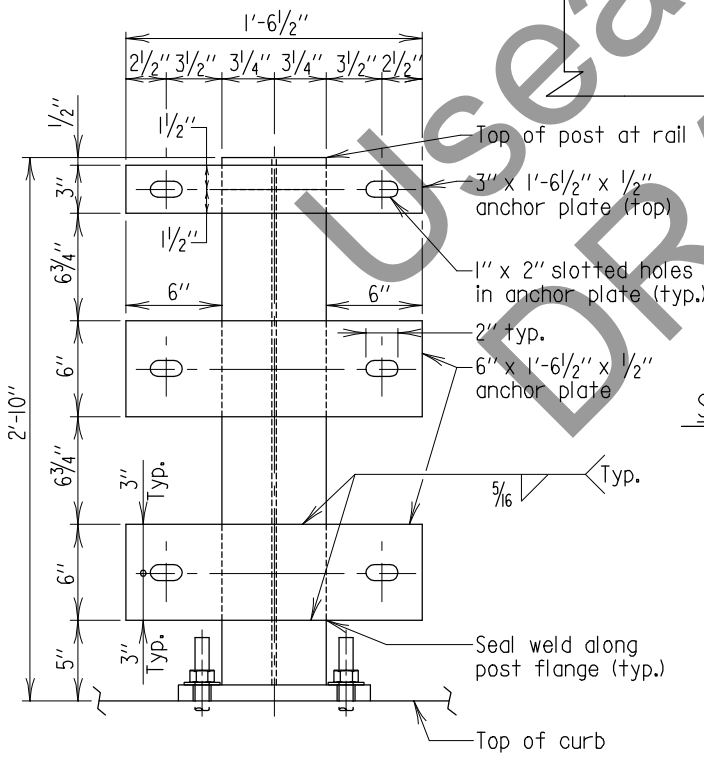

ELEVATION - RAIL ANCHOR PLATE DETAIL

Scale: 1" = 1'-0"

Useable DRAFT

TL-4 BRIDGE RAILING

* USEABLE DRAFT *

APPROVAL	
_____ DIRECTOR OFFICE OF STRUCTURES	
DATE: 09/01/15	
REVISIONS	
SHA	FHWA
FHWA APPROVAL	
DATE:	

STATE OF MARYLAND
DEPARTMENT OF TRANSPORTATION
STATE HIGHWAY ADMINISTRATION
OFFICE OF STRUCTURES

THREE STRAND STRUCTURAL TUBE RAIL
CURB MOUNTED - DETAILS
PRECAST SLAB PANEL MOUNTED

NO. SUP-TB(TR)-101 SHEET 3 OF 5

SUPER TRAFFIC BARRIER

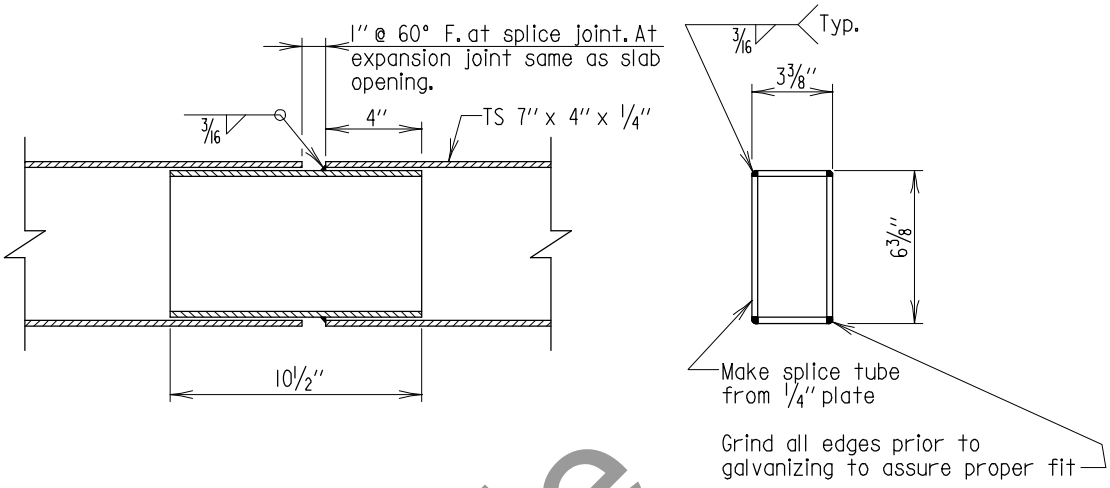

PLAN

SECTION - SPLICE TUBE

RAIL SPLICE DETAILS (TS 7" x 4" x 1/4")

Scale: 1 1/2" = 1'-0"

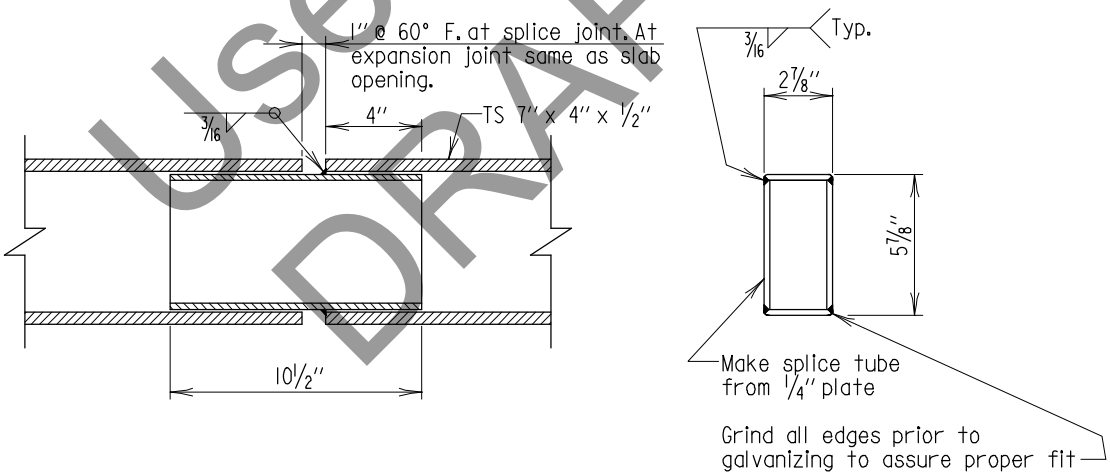

PLAN

SECTION - SPLICE TUBE

RAIL SPLICE DETAILS (TS 7" x 4" x 1/2")

Scale: 1 1/2" = 1'-0"

Useable DRAFT

TL-4 BRIDGE RAILING

* USEABLE DRAFT *

APPROVAL	
_____ DIRECTOR OFFICE OF STRUCTURES DATE: 09/01/15	
REVISIONS	
SHA	FHWA

FHWA APPROVAL
DATE:

STATE OF MARYLAND
DEPARTMENT OF TRANSPORTATION
STATE HIGHWAY ADMINISTRATION
OFFICE OF STRUCTURES

THREE STRAND STRUCTURAL TUBE RAIL
CURB MOUNTED - DETAILS

STANDARD NO. SUP-TB(TR)-101

SHEET 4 OF 5

SUPER TRAFFIC BARRIER

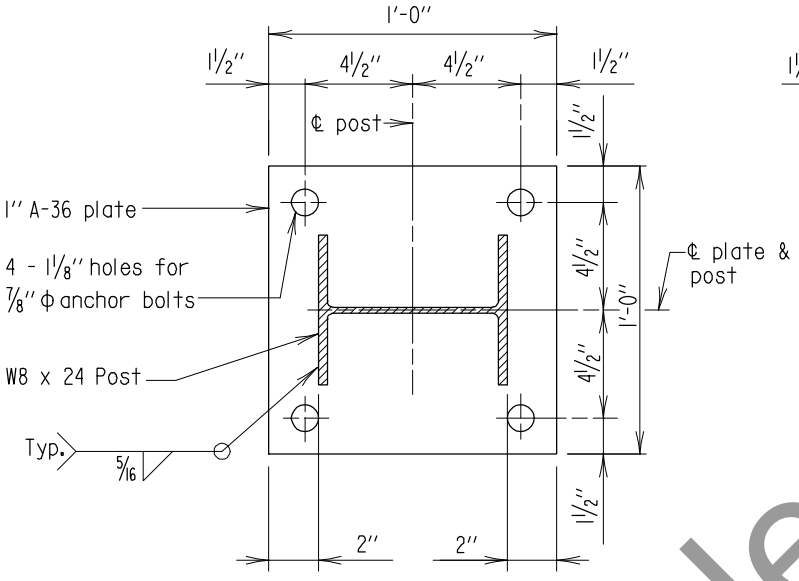

PLAN

BASE PLATE DETAIL

Scale: 1½" = 1'-0"

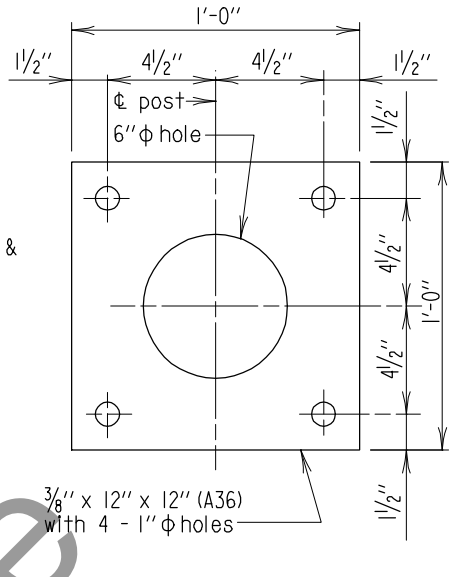

PLAN

ANCHOR PLATE DETAIL

Scale: 1½" = 1'-0"

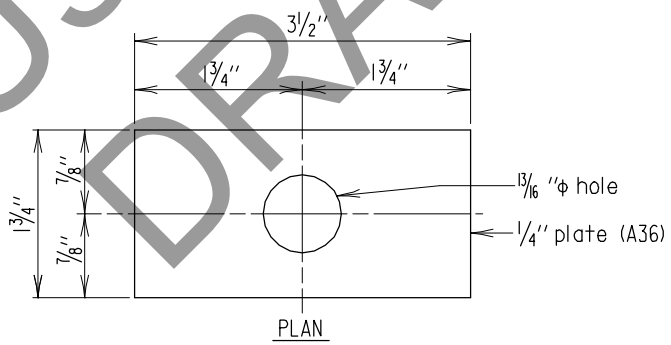

PLAN

PLATE WASHER

Scale: 6" = 1'-0"

Useable DRAFT

Note:
Position washers to completely cover slotted hole.

TL–4 BRIDGE RAILING

* USEABLE DRAFT *

APPROVAL	
_____ DIRECTOR OFFICE OF STRUCTURES	
DATE: 09/01/15	
REVISIONS	
SHA	FHWA

FHWA APPROVAL
DATE:

STATE OF MARYLAND
DEPARTMENT OF TRANSPORTATION
STATE HIGHWAY ADMINISTRATION
OFFICE OF STRUCTURES

THREE STRAND STRUCTURAL TUBE RAIL
CURB MOUNTED - DETAILS

STANDARD NO. SUP-TB(TR)-101

SHEET 5 OF 5

SUPER TRAFFIC BARRIER

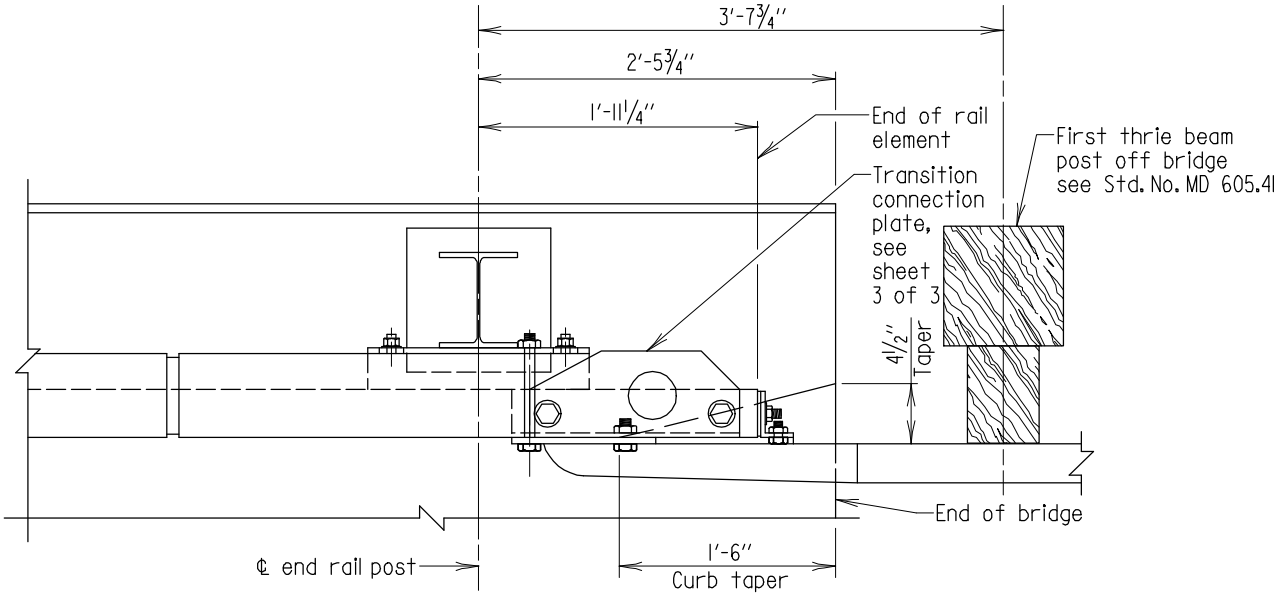

PLAN

Scale: 3/4" = 1'-0"

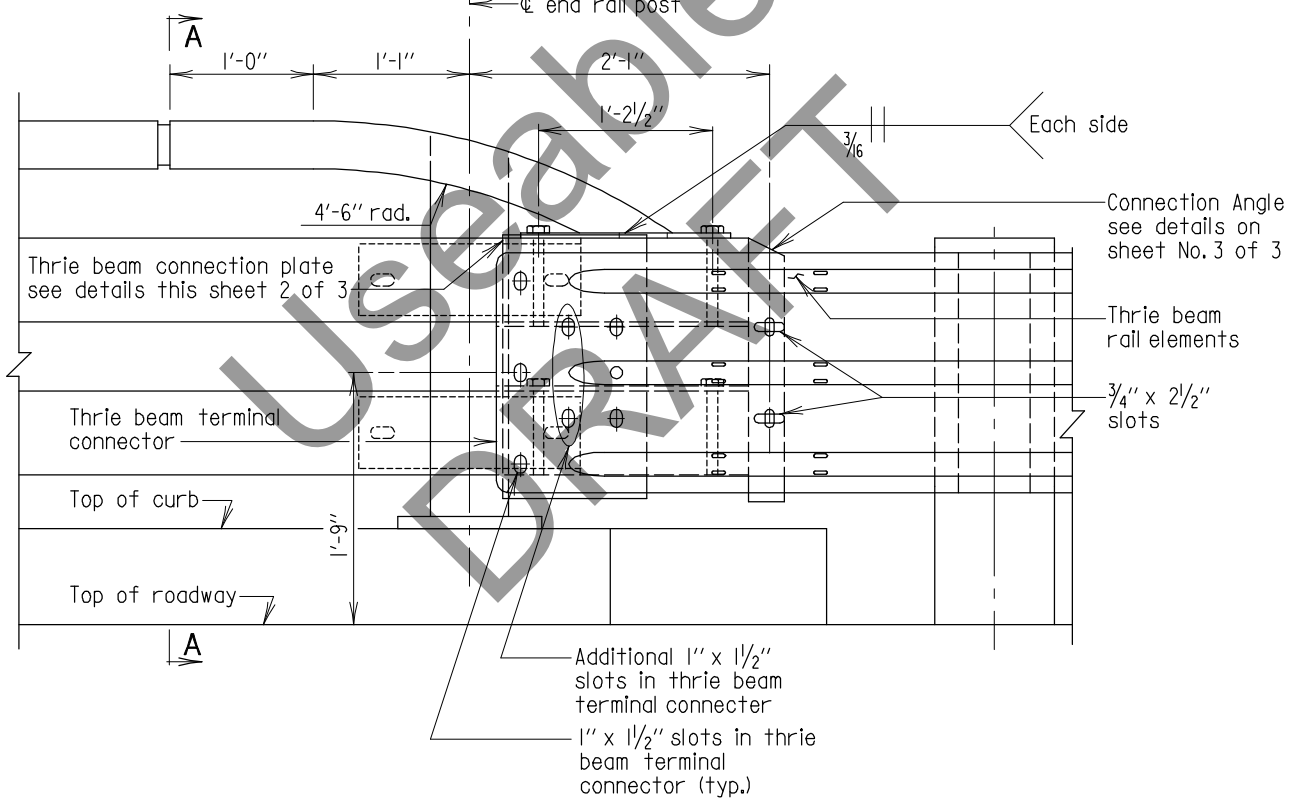

TRANSITION CONNECTION ELEVATION

Scale: 3/4" = 1'-0"

Useable DRAFT

Note:
See Std. No. MD 605.41 for additional details on Thrie Beam Anchorage Post Spacing.

* USEABLE DRAFT *

APPROVAL	
_____ DIRECTOR OFFICE OF STRUCTURES	
DATE: 09/01/15	
REVISIONS	
SHA	FHWA

FHWA APPROVAL	
DATE:	

STATE OF MARYLAND
DEPARTMENT OF TRANSPORTATION
STATE HIGHWAY ADMINISTRATION
OFFICE OF STRUCTURES

THREE STRAND STRUCTURAL TUBE RAIL
THRIE BEAM CONNECTION PLATE

NO. SUP-TB(TR)-102 SHEET 1 OF 3

SUPER TRAFFIC BARRIER

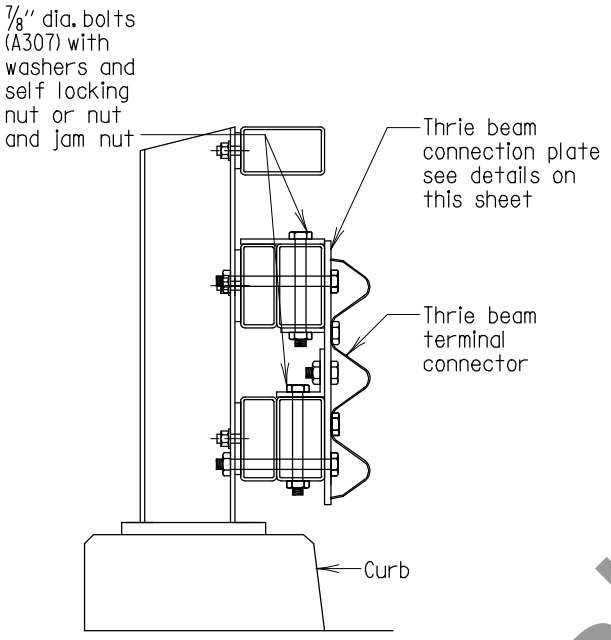

SECTION A-A

Scale: 3/4" = 1'-0"

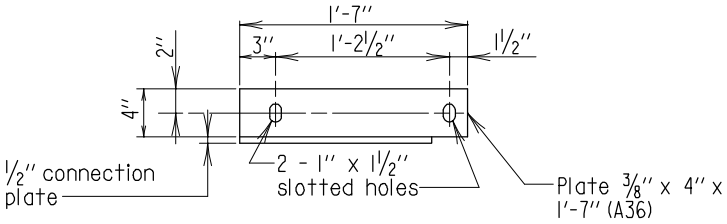

SECTION B-B

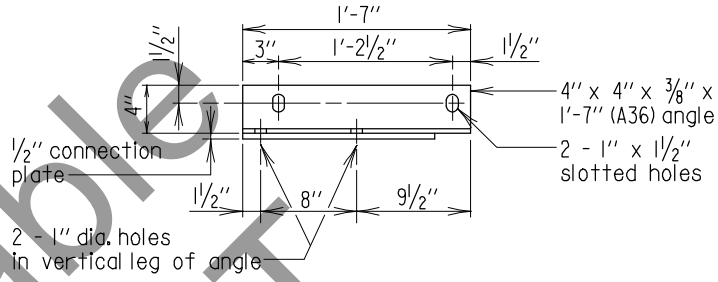

SECTION C-C

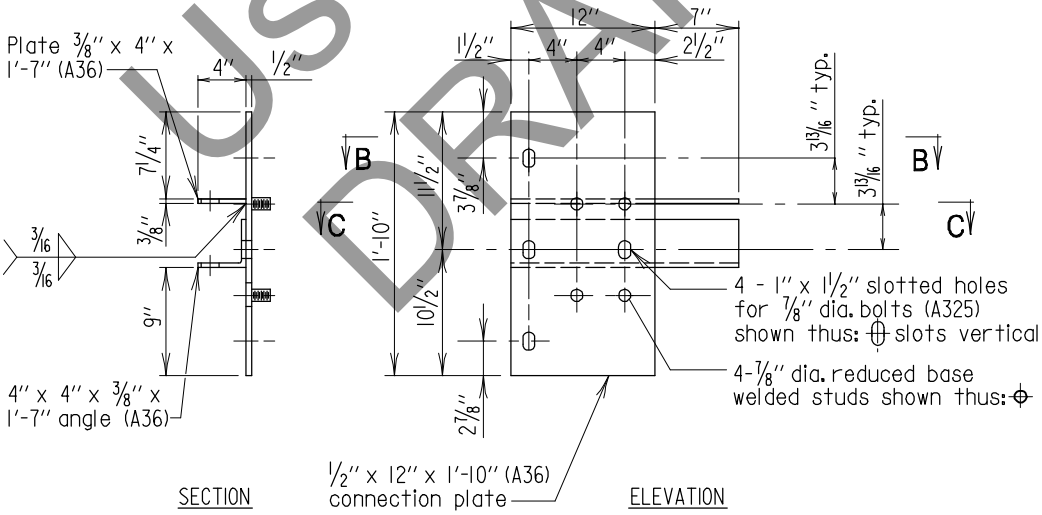

CONNECTION PLATE DETAILS

Scale: 3/4" = 1'-0"

Useable DRAFT

* USEABLE DRAFT *

APPROVAL	
_____ DIRECTOR OFFICE OF STRUCTURES	
DATE: 09/01/15	
REVISIONS	
SHA	FHWA

FHWA APPROVAL

DATE:

STATE OF MARYLAND
DEPARTMENT OF TRANSPORTATION
STATE HIGHWAY ADMINISTRATION
OFFICE OF STRUCTURES

THREE STRAND STRUCTURAL TUBE RAIL
THRIE BEAM CONNECTION PLATE

NO. SUP-TB(TR)-102 SHEET 2 OF 3

SUPER TRAFFIC BARRIER

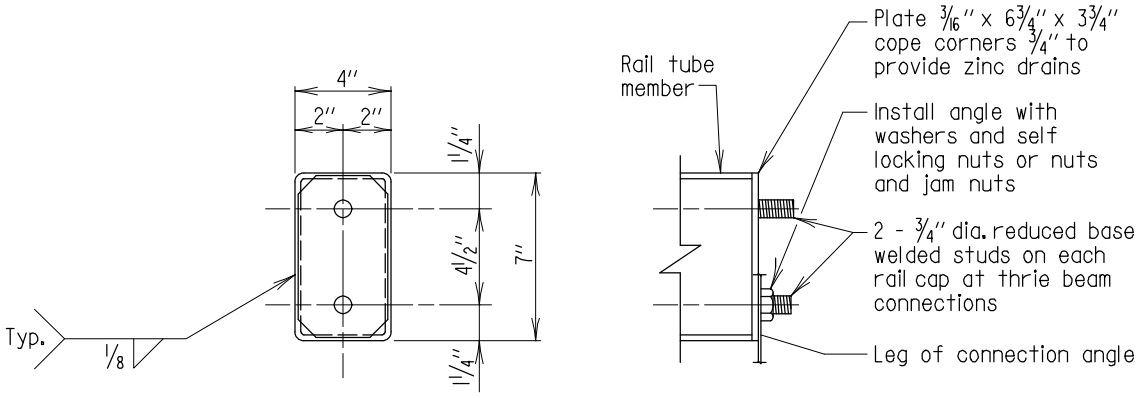

RAIL CAP DETAIL

Scale: 1 1/2" = 1'-0"

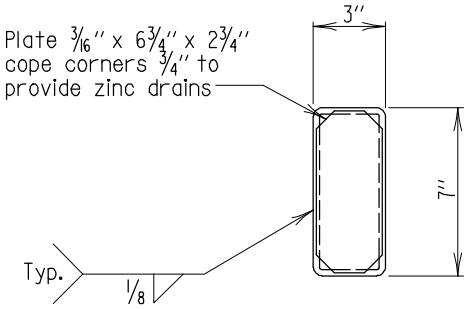

RAIL CAP FOR SPACER BLOCK

Scale: 1 1/2" = 1'-0"

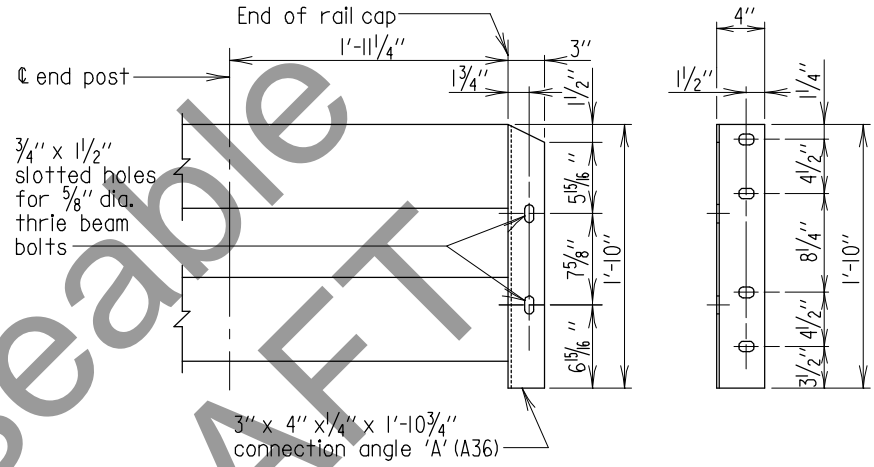

CONNECTION ANGLE

Scale: 3/4" = 1'-0"

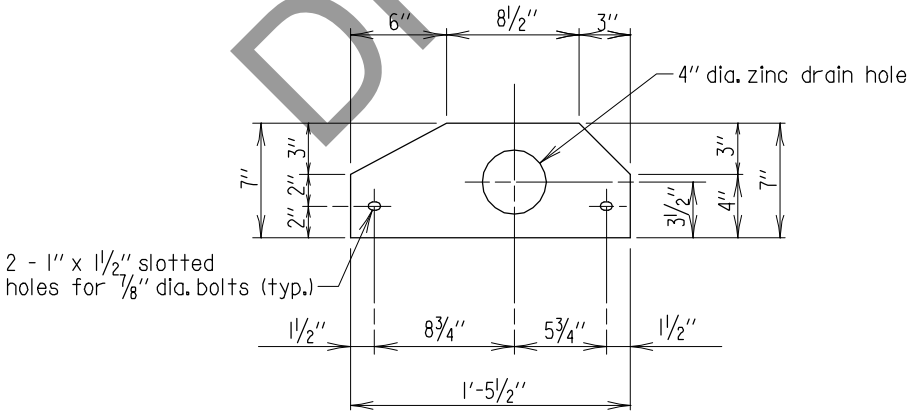

TOP RAIL TRANSITION CONNECTION PLATE

Scale: 1 1/2" = 1'-0"

Useable DRAFT

* USEABLE DRAFT *

APPROVAL	
_____ DIRECTOR OFFICE OF STRUCTURES	
DATE: 09/01/15	
REVISIONS	
SHA	FHWA

FHWA APPROVAL	
DATE:	

STATE OF MARYLAND
DEPARTMENT OF TRANSPORTATION
STATE HIGHWAY ADMINISTRATION
OFFICE OF STRUCTURES

THREE STRAND STRUCTURAL TUBE RAIL
THRIE BEAM CONNECTION PLATE

NO. SUP-TB(TR)-102 SHEET 3 OF 3

SUPER TRAFFIC BARRIER

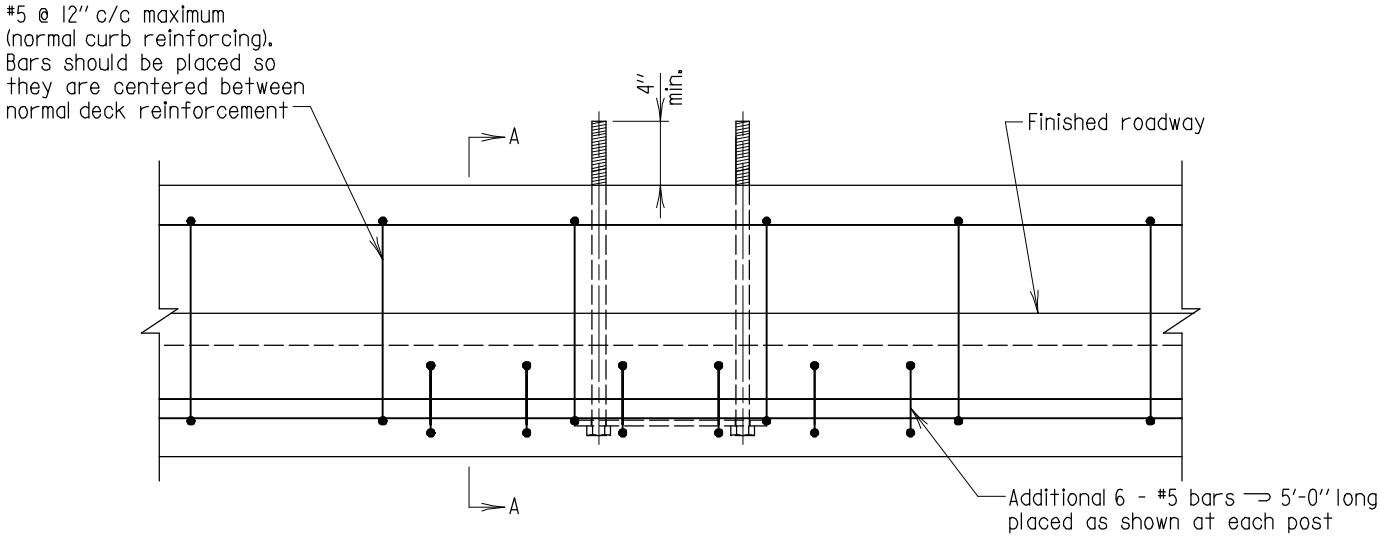

ELEVATION

Scale: 1" = 1'-0"

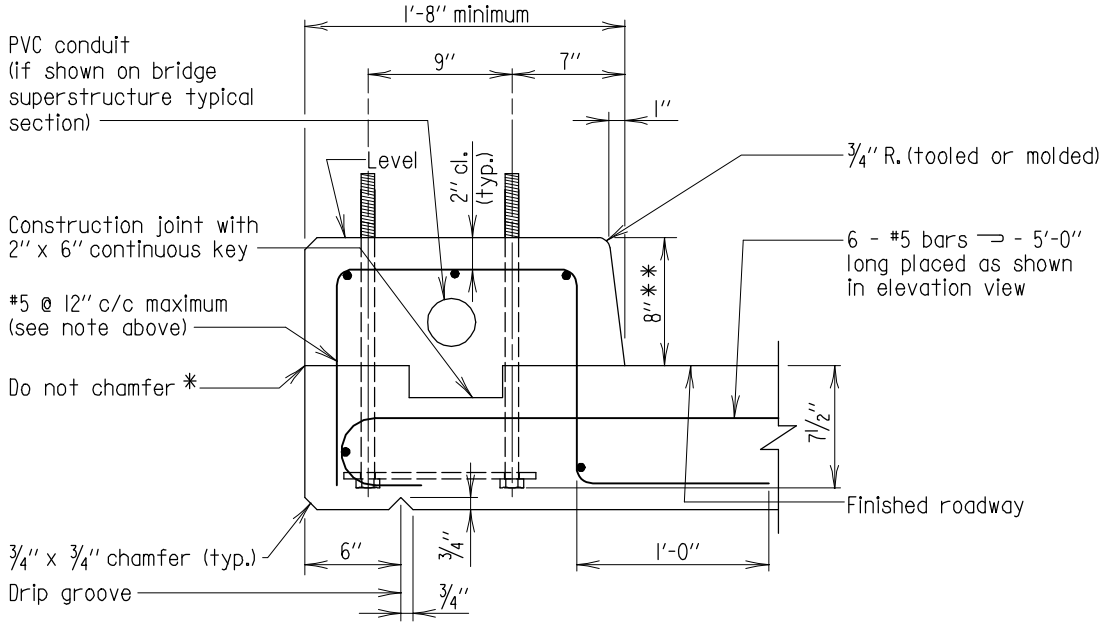

SECTION A-A

Scale: 1" = 1'-0"

* In order to insure a smooth and acceptable surface, Section 420.03.11 (Construction joints) will be strictly adhered to.

** May vary with application.

Notes:
1. All longitudinal bars are #5 spaced as shown.
2. Normal concrete deck reinforcing not shown.
3. All reinforcing steel shall be epoxy coated.

(USE WITH STD. NO. SUP-TB(TR)-101)

* USEABLE DRAFT *

APPROVAL	
_____ DIRECTOR OFFICE OF STRUCTURES	
DATE: 09/01/15	
REVISIONS	
SHA	FHWA
FHWA APPROVAL	
DATE:	

STATE OF MARYLAND
DEPARTMENT OF TRANSPORTATION
STATE HIGHWAY ADMINISTRATION
OFFICE OF STRUCTURES

BRIDGE DECK CURB DETAIL
FOR THREE STRAND STRUCTURAL TUBE RAIL

NO. SUP-TB(TR)-201 SHEET ___ OF 1

SUPER TRAFFIC BARRIER

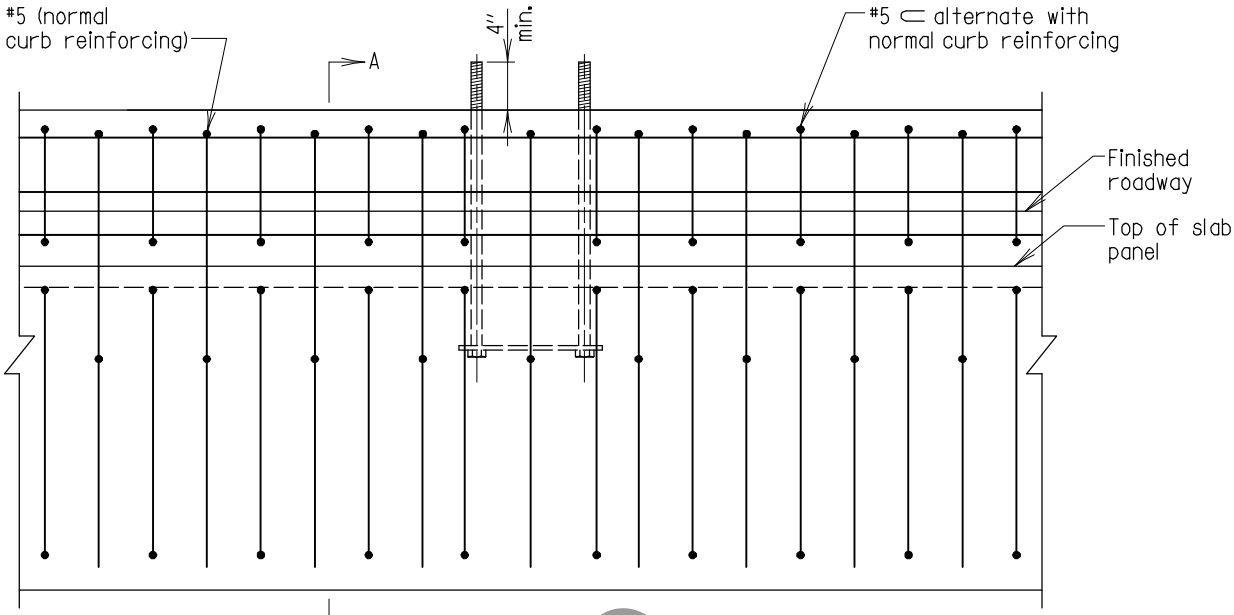

ELEVATION
Scale: 3/4" = 1'-0"

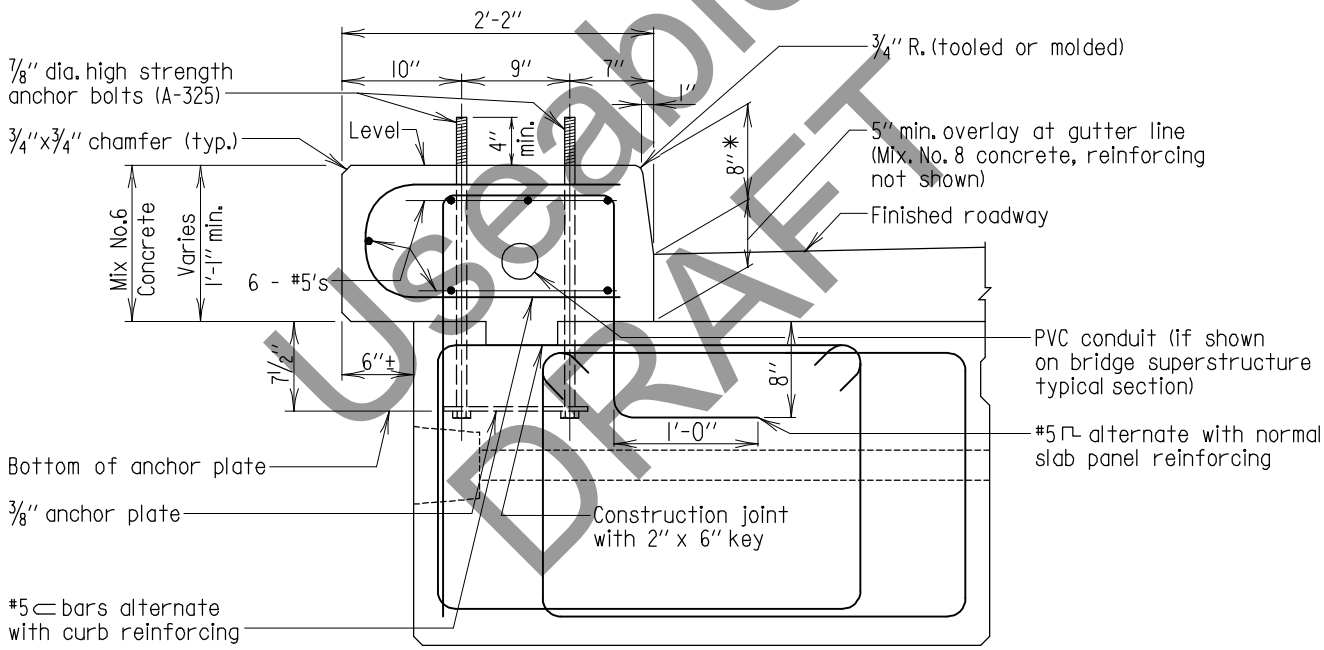

SECTION A-A
Scale: 3/4" = 1'-0"

Useable DRAFT

Notes:
1. The cost of curb including reinforcing, PVC conduit will be included in Superstructure Concrete item.
2. The cost of anchor bolts and plates will be included in the Railing item.
3. All reinforcing steel shall be epoxy coated.
4. Longitudinal reinforcing steel in the precast slab panel not shown.
5. Prestressing strands in the precast slab panel not shown.
6. For size and spacing of precast slab panel stirrups see precast slab panel details.

* May vary with application.

* USEABLE DRAFT *

APPROVAL	
_____ DIRECTOR OFFICE OF STRUCTURES	
DATE: 09/01/15	
REVISIONS	
SHA	FHWA
FHWA APPROVAL	
DATE:	

STATE OF MARYLAND
DEPARTMENT OF TRANSPORTATION
STATE HIGHWAY ADMINISTRATION
OFFICE OF STRUCTURES

PRECAST CONCRETE SLAB PANEL
CURB DETAIL
FOR THREE STRAND STRUCTURAL TUBE RAIL

NO. SUP-TB(TR)-301 SHEET 1 OF 1

SUPER TRAFFIC BARRIER

SUPERSTRUCTURE

TRAFFIC BARRIERS

MEDIAN BARRIER

(SUP-TB(MB))

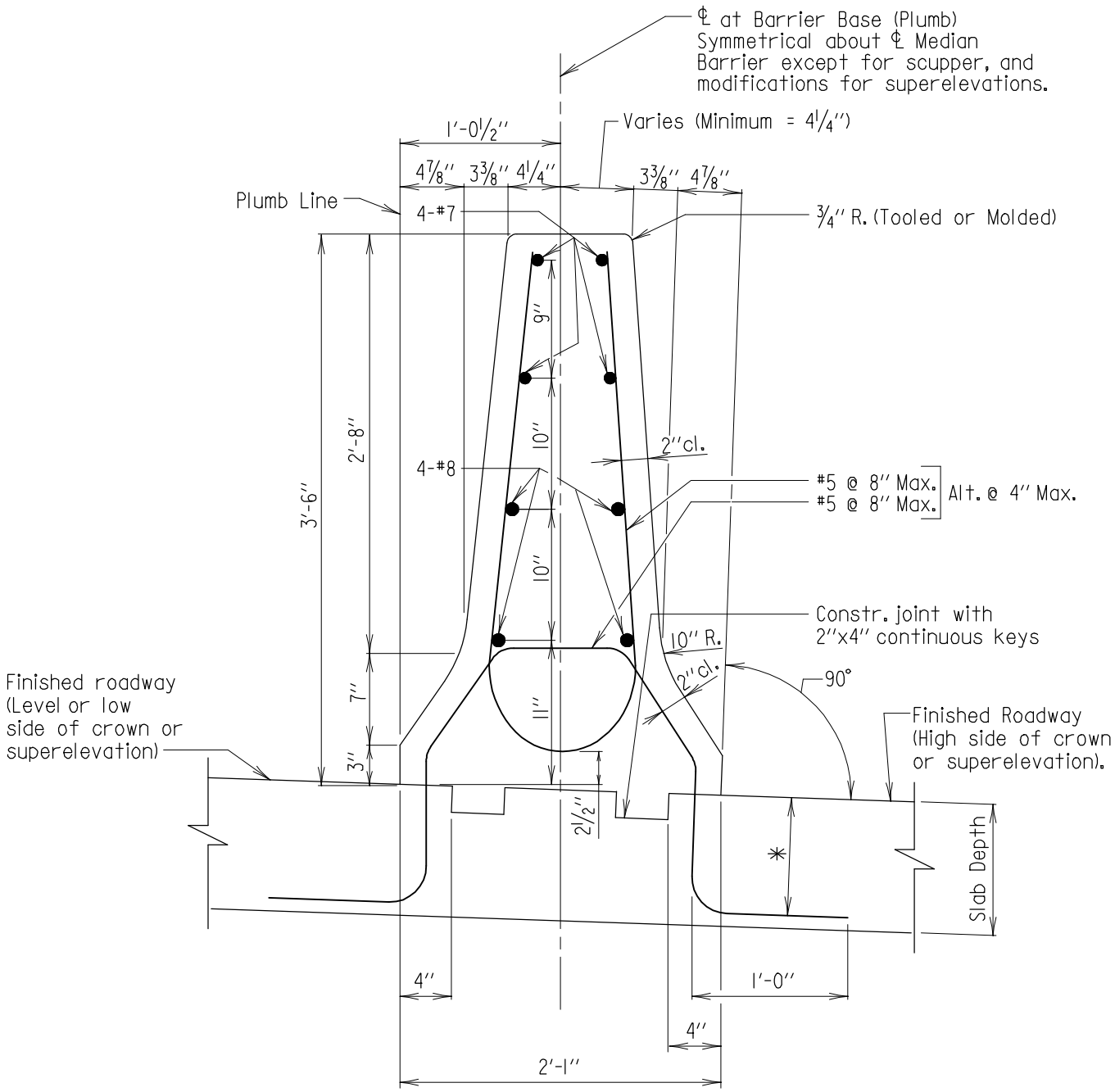

SECTION

Scale: 1" = 1'-0"

* Slab depth minus 1".

Notes:

1. Place ½" saw cut joints to match joint spacing of outside parapet.
2. Concrete deck reinforcing steel not shown.
3. All #7 and #8 longitudinal bars shall be placed continuously in the barrier from expansion opening to expansion opening in a simple span bridge and expansion opening to centerline of pier in a multi span bridge.
4. All keys are nominal size.
5. No increase in any prices bid will be allowed for barrier modifications due to roadway slope.

42" MEDIAN TL-5 BRIDGE RAILNG

APPROVAL	
E.S. Freedman DIRECTOR OFFICE OF STRUCTURES	
DATE: 3/25/77	
REVISIONS	
SHA	FHWA
9-26-89	3-5-90
10-31-90	
10-22-03	
11-26-07	

FHWA APPROVAL	
DATE: 2-25-77	

STATE OF MARYLAND
DEPARTMENT OF TRANSPORTATION
STATE HIGHWAY ADMINISTRATION
OFFICE OF STRUCTURES

42" F-SHAPE MEDIAN BARRIER FOR BRIDGE WITHOUT LONGITUDINAL JOINT

STANDARD NO. SUP-TB(MB)-101 SHEET 1 OF 1

SUPER TRAFFIC BARRIER

OLD NO. BR-SS(6.03)-03-28

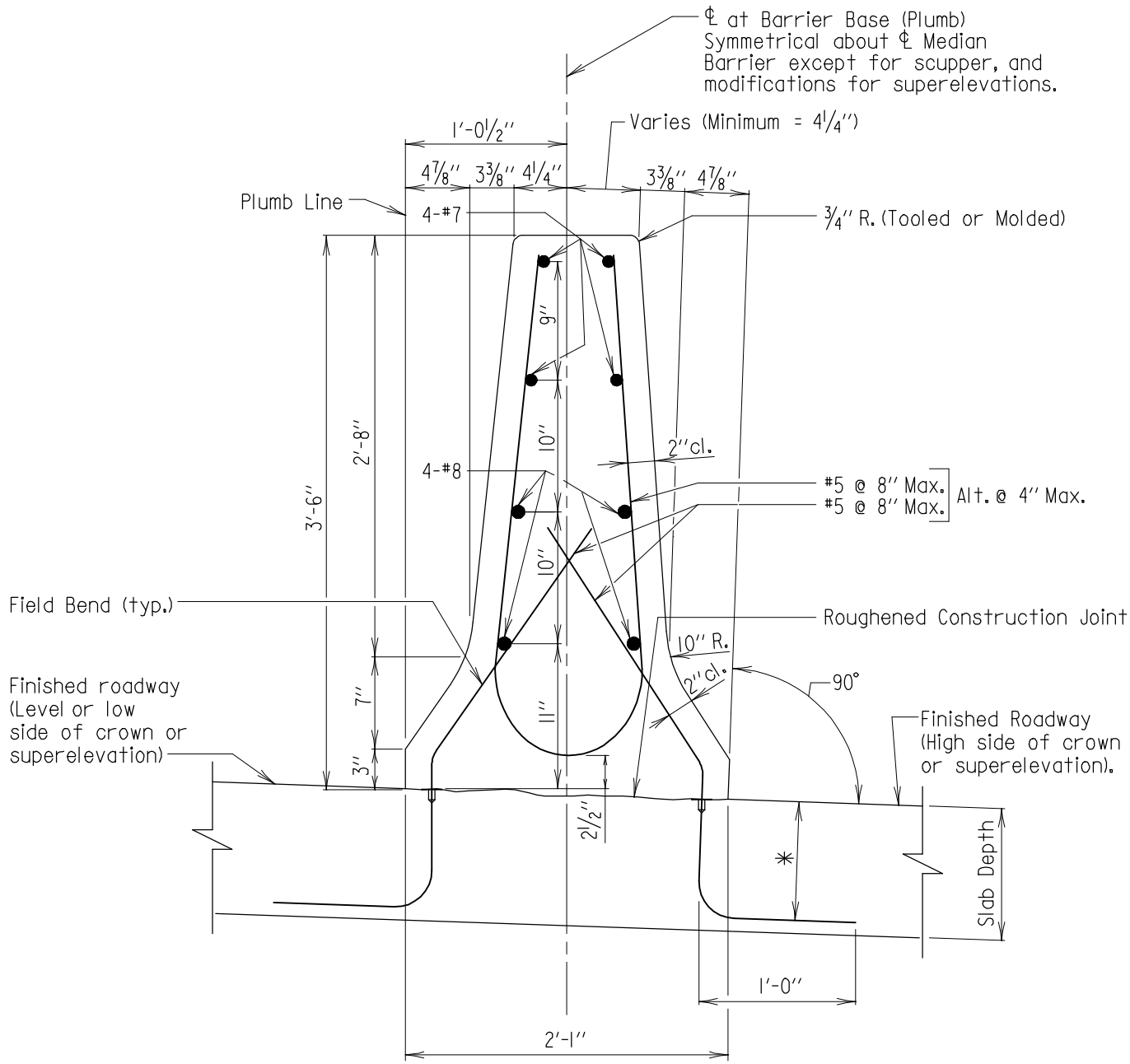

SECTION

Scale: 1" = 1'-0"

Notes:

1. All #7 and #8 longitudinal bars shall be placed continuously in the barrier from expansion opening to expansion opening in a simple span bridge and expansion opening to centerline of pier in a multi span bridge.
2. All reinforcement bars shall be epoxy coated.
3. The Contractor has the option of substituting cast-in-place epoxy coated open coil inserts with threaded holes for the bars shown. The inserts in the back face of the parapet shall have a minimum working load tension strength of 6000 lb. and a minimum length of 4½". The inserts in the front face shall have a minimum working load tension strength of 8000 lb. and a minimum length of 5½". The cost of epoxy coated inserts shall be included in the pertinent Superstructure Concrete item.
4. Concrete deck reinforcing steel not shown.
5. Place ½" saw cut joints to match joint spacing of outside parapet.
6. No increase in any prices bid will be allowed for barrier modifications due to roadway slope or maintenance of traffic.

* Slab depth minus 1".

42" MEDIAN

APPROVAL	
E.S. Freedman DIRECTOR OFFICE OF STRUCTURES	
DATE: 6/1/05	
REVISIONS	
SHA	FHWA
FHWA APPROVAL	
DATE:	

STATE OF MARYLAND
DEPARTMENT OF TRANSPORTATION
STATE HIGHWAY ADMINISTRATION
OFFICE OF STRUCTURES

42" F-SHAPE MEDIAN BARRIER FOR BRIDGE WITHOUT LONGITUDINAL JOINT WHERE TRAFFIC WILL USE AREA PRIOR TO PLACING BARRIER

STANDARD NO. SUP-TB(MB)-102 SHEET 1 OF 1

SUPER TRAFFIC BARRIER

OLD NO. BR-SS(6.50)-03-352

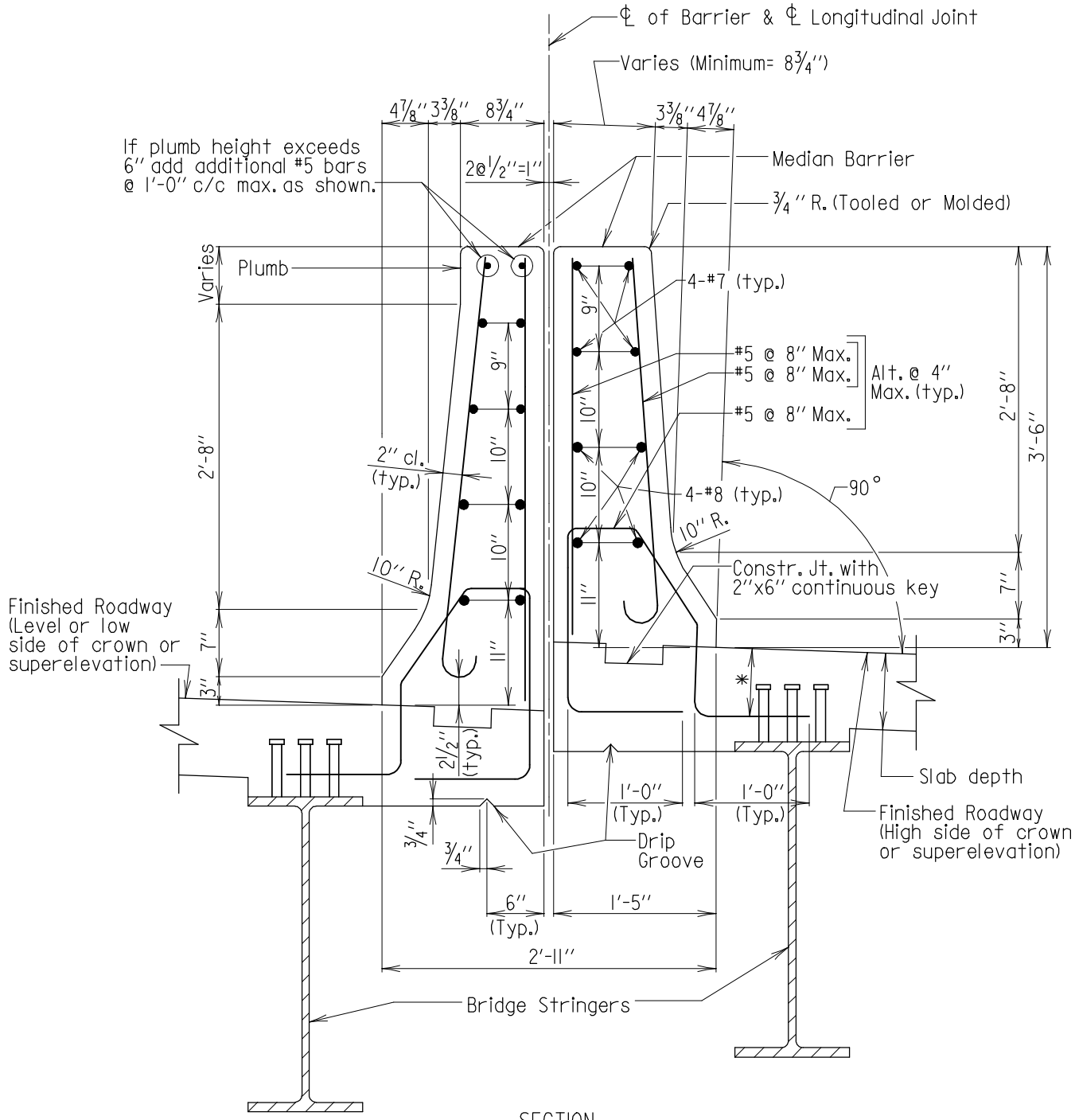

SECTION

Scale : ¾" = 1'-0"

*Slab depth minus 1".

Notes:

1. All #7 and #8 longitudinal bars shall be placed continuously in the barrier from expansion opening to expansion opening in a simple span bridge and expansion opening to centerline of pier in a multi span bridge.
2. All reinforcing steel epoxy coated.
3. Concrete deck reinforcing steel not shown.
4. Place ½" saw cut joints to match joint spacing of outside parapet.
5. All keys are nominal size.
6. No increase in any prices bid will be allowed for barrier modifications due to roadway slope.

42" MEDIAN TL-5 BRIDGE RAILING

APPROVAL	
E.S. Freedman DIRECTOR OFFICE OF STRUCTURES	
DATE: 4/28/80	
REVISIONS	
SHA	FHWA
10-31-90	
6-5-91	
FHWA APPROVAL 10-22-03	
DATE: 11-26-07	

STATE OF MARYLAND
DEPARTMENT OF TRANSPORTATION
STATE HIGHWAY ADMINISTRATION
OFFICE OF STRUCTURES

42" F-SHAPE MEDIAN BARRIER
FOR BRIDGE WITH OPEN LONGITUDINAL JOINT

STANDARD NO. SUP-TB(MB)-201 SHEET 1 OF 1

SUPER TRAFFIC BARRIER

OLD NO. BR-SS(6.19)-03-104

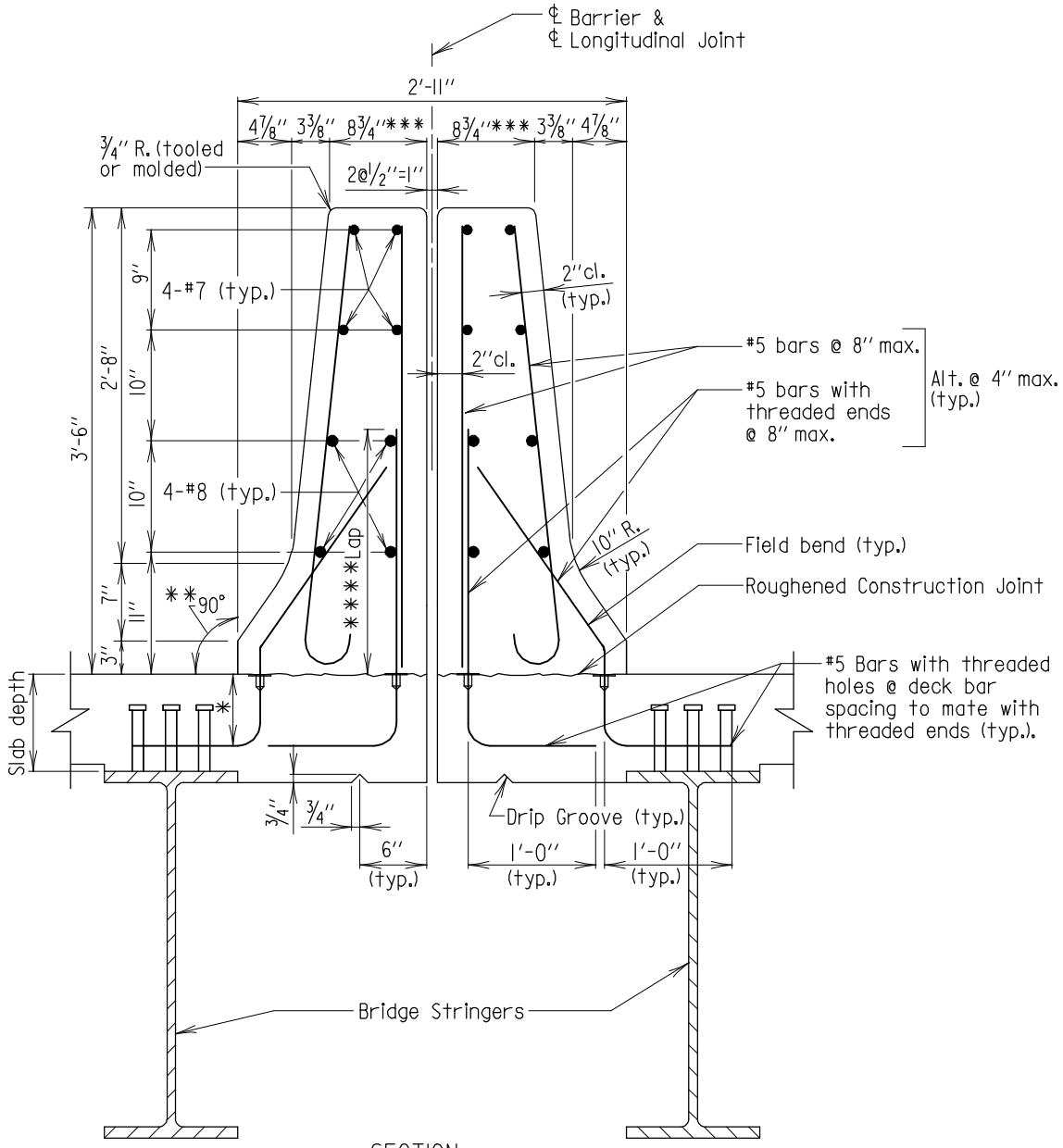

SECTION

Scale: 3/4" : 1'-0"

* Slab depth minus 1".

** For high side of crown or superelevation, otherwise this is a vertical line that all dimensions are measured from.

*** These dimensions can change if superelevation affects barrier face alignment.

**** Dowel may replace vertical by being extended full height.

Notes:

1. All #7 and #8 longitudinal bars shall be placed continuously in the barrier from expansion opening to expansion opening in a simple span bridge and expansion opening to centerline of pier in a multi span bridge.
2. All reinforcement bars shall be epoxy coated.
3. The Contractor has the option of substituting cast-in-place epoxy coated open coil inserts with threaded holes for the bars shown. The inserts in the back face of the parapet shall have a minimum working load tension strength of 6000 lb. and a minimum length of 4 1/2". The inserts in the front face shall have a minimum working load tension strength of 8000 lb. and a minimum length of 5 1/2". The cost of epoxy coated inserts shall be included in the pertinent Superstructure Concrete item.
4. Concrete deck reinforcing steel not shown.
5. Place 1/2" saw cut joints to match joint spacing of outside parapet.
6. No increase in any prices bid will be allowed for barrier modifications due to roadway slope or maintenance of traffic.

42" MEDIAN

APPROVAL
E.S. Freedman DIRECTOR OFFICE OF STRUCTURES
DATE: 11/2/83

REVISIONS	
SHA	FHWA
8-17-90	
10-26-90	
7-2-93	
10-22-03	

FHWA APPROVAL
DATE: 12-9-83

STATE OF MARYLAND
DEPARTMENT OF TRANSPORTATION
STATE HIGHWAY ADMINISTRATION
OFFICE OF STRUCTURES

42" F-SHAPE MEDIAN BARRIER FOR BRIDGE WITH LONGITUDINAL JOINT WHERE TRAFFIC WILL USE AREA PRIOR TO PLACING BARRIER

STANDARD NO. SUP-TB(MB)-202 SHEET 1 OF 1

SUPER TRAFFIC BARRIER

OLD NO. BR-SS(6.24)-03-156

SUPERSTRUCTURE

TRAFFIC BARRIERS

CONDUIT PLACEMENT

(SUP-TB(CP))

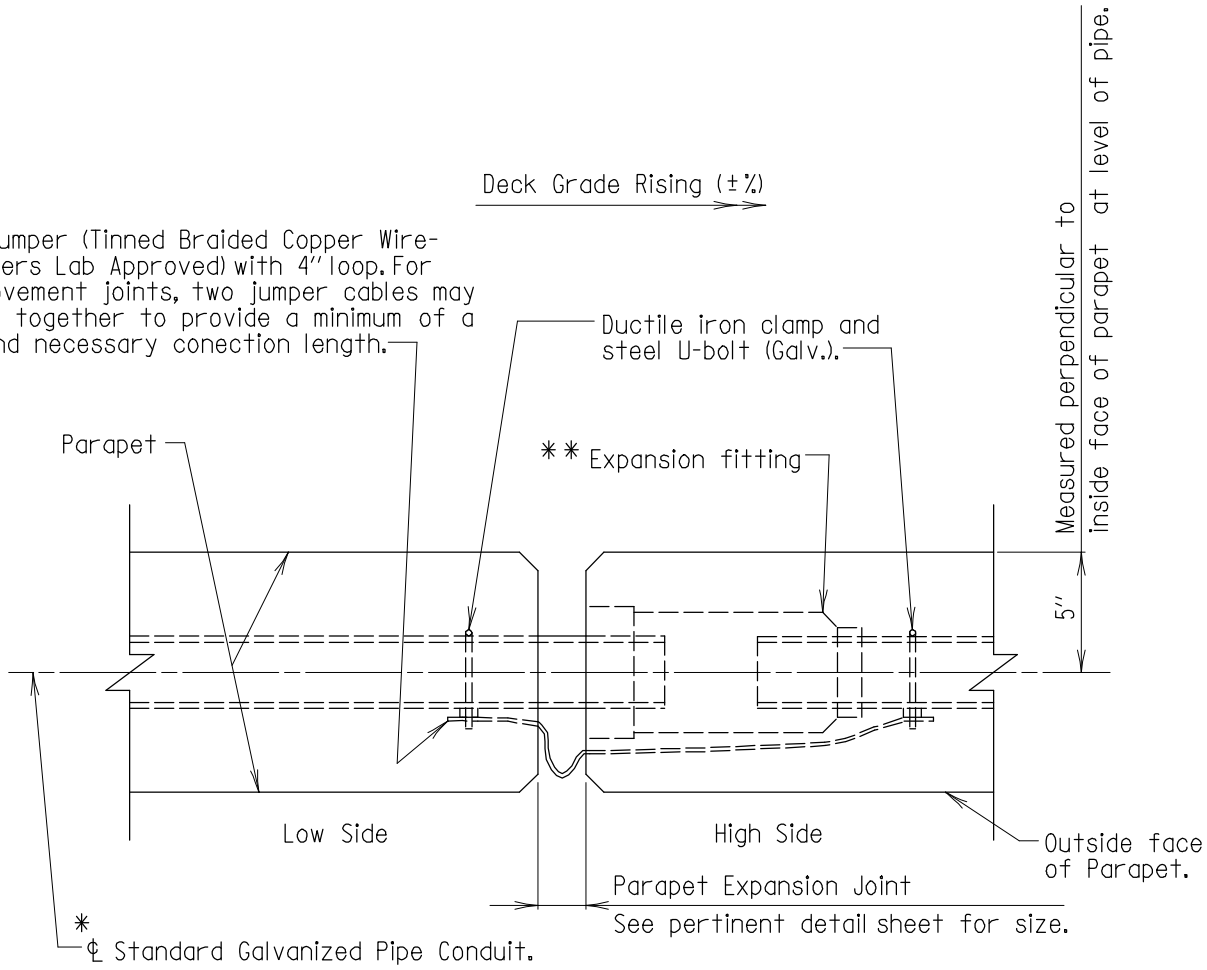

SECTION

Scale: 1½" = 1'-0"

* For conduit size see Superstructure "Typical Section" sheet. Vertical location of ℄ of this conduit shall be at least 4" below bottom of railing or fencing anchorage systems.

** Expansion fittings for use with rigid galvanized steel conduit shall consist of a malleable iron head and steel sleeve which shall be hot-dipped galvanized and assembled with a watertight packing gland, an insulated bushing, pressure ring and gasket and a tinned-copper bond to assure continuity of ground. The fitting shall provide, unless otherwise noted on the plans: 4" of movement for all compression seal roadway joints and 8" of movement for all other roadway joints, such as steel finger joints.

Notes:

1. Place expansion joint in pipe conduit and parapet at every expansion joint at supports in bridge deck.
2. #10 galvanized pull wire to be provided for full length of conduit and left in place.
3. Contractor may furnish either PVC conduit as shown on sheet 2 of 2 or material shown on this detail. However only one type can be used throughout a structure.

APPROVAL	
E.S. Freedman DIRECTOR OFFICE OF STRUCTURES	
DATE: 6/20/75	
REVISIONS	
SHA	FHWA
7-5-83	11-29-85
9-1-83	11-29-85
12-29-89	6-8-90
1-22-01	

FHWA APPROVAL	
DATE: 8-24-76	

STATE OF MARYLAND
DEPARTMENT OF TRANSPORTATION
STATE HIGHWAY ADMINISTRATION
OFFICE OF STRUCTURES

EXPANSION JOINT FOR CONDUIT IN PARAPET

STANDARD NO. SUP-TB(CP)-101 SHEET 1 OF 2

SUPER TRAFFIC BARRIER

OLD NO. BR-SS(0.01)-75-13

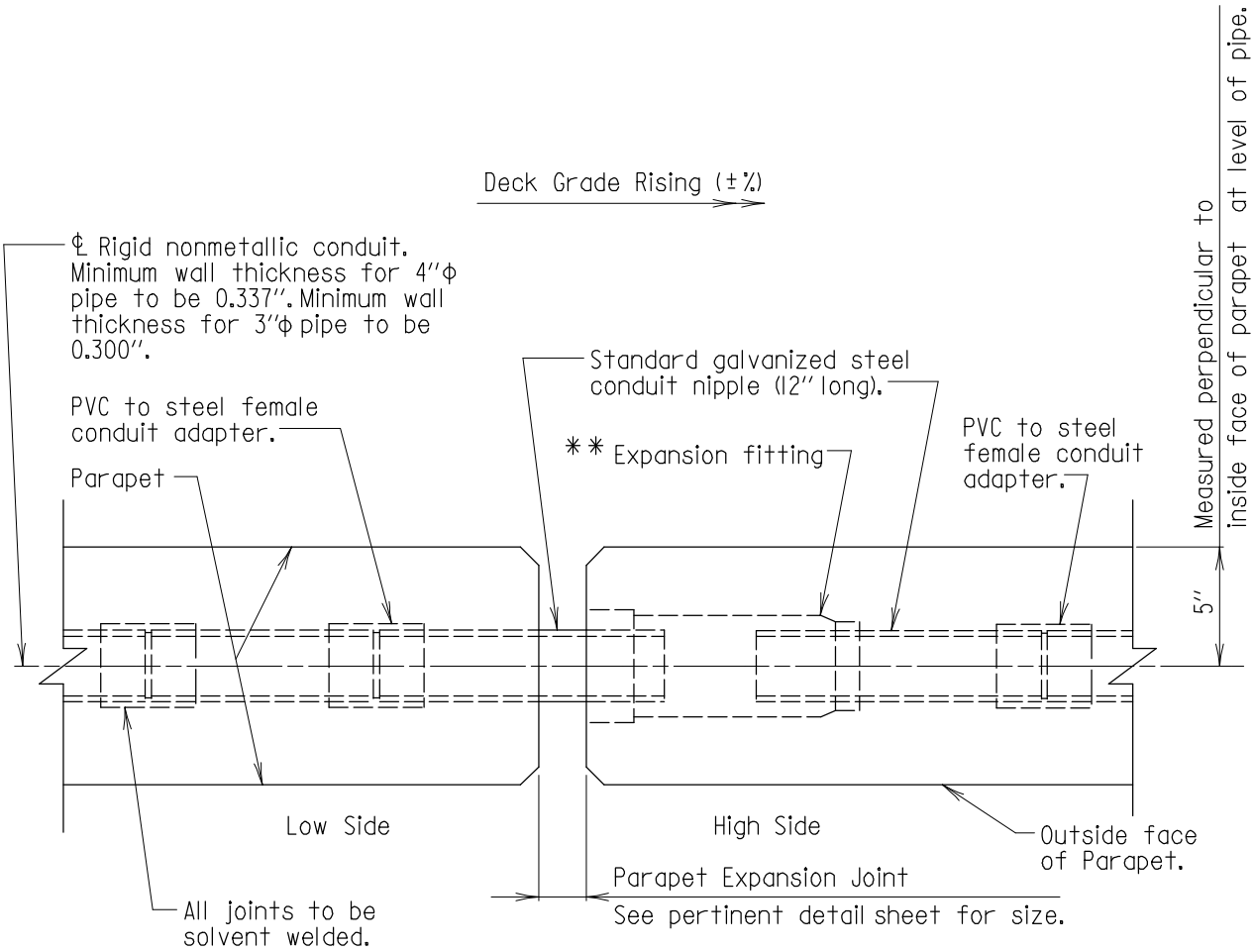

Note: No bonding jumper cable is required.

SECTION

Scale: 1½" = 1'-0"

* For conduit size see Superstructure "Typical Section" sheet. Vertical location of ℄ of this conduit shall be at least 4" below bottom of railing or fencing anchorage systems.

** Expansion fittings for use with rigid galvanized steel conduit shall consist of a malleable iron head and steel sleeve which shall be hot-dipped galvanized and assembled with a watertight packing gland, an insulated bushing, pressure ring and gasket and a tinned-copper bond to assure continuity of ground. The fitting shall provide, unless otherwise noted on the plans: 4" of movement for all compression seal roadway joints and 8" of movement for all other roadway joints, such as steel finger joints.

Notes:

1. Place expansion joint in pipe conduit and parapet at every expansion joint at supports in bridge deck.
2. #10 galvanized pull wire to be provided for full length of conduit and left in place.
3. All pipe and expansion joint must be U.L. approved for encasement in concrete.
4. Fittings to be PVC, except for expansion joint.
5. Nonmetallic conduit shall conform to 921.07.02.

APPROVAL
R.S. Friedman DIRECTOR OFFICE OF STRUCTURES
DATE: 9/27/83

REVISIONS	
SHA	FHWA
1-3-90	
5-26-92	
1-4-94	
1-22-01	

FHWA APPROVAL
DATE: 11-29-85

STATE OF MARYLAND
DEPARTMENT OF TRANSPORTATION
STATE HIGHWAY ADMINISTRATION
OFFICE OF STRUCTURES

EXPANSION JOINT FOR CONDUIT IN PARAPET

STANDARD NO. SUP-TB(CP)-101 SHEET 2 OF 2

SUPER TRAFFIC BARRIER

OLD NO. BR-SS(0.01)-75-13

Note: Details shown are for single rail; double rail and fencing details are similar. On bridges with no fencing or railing see General Plan and Elevation for parapet control joint spacing.

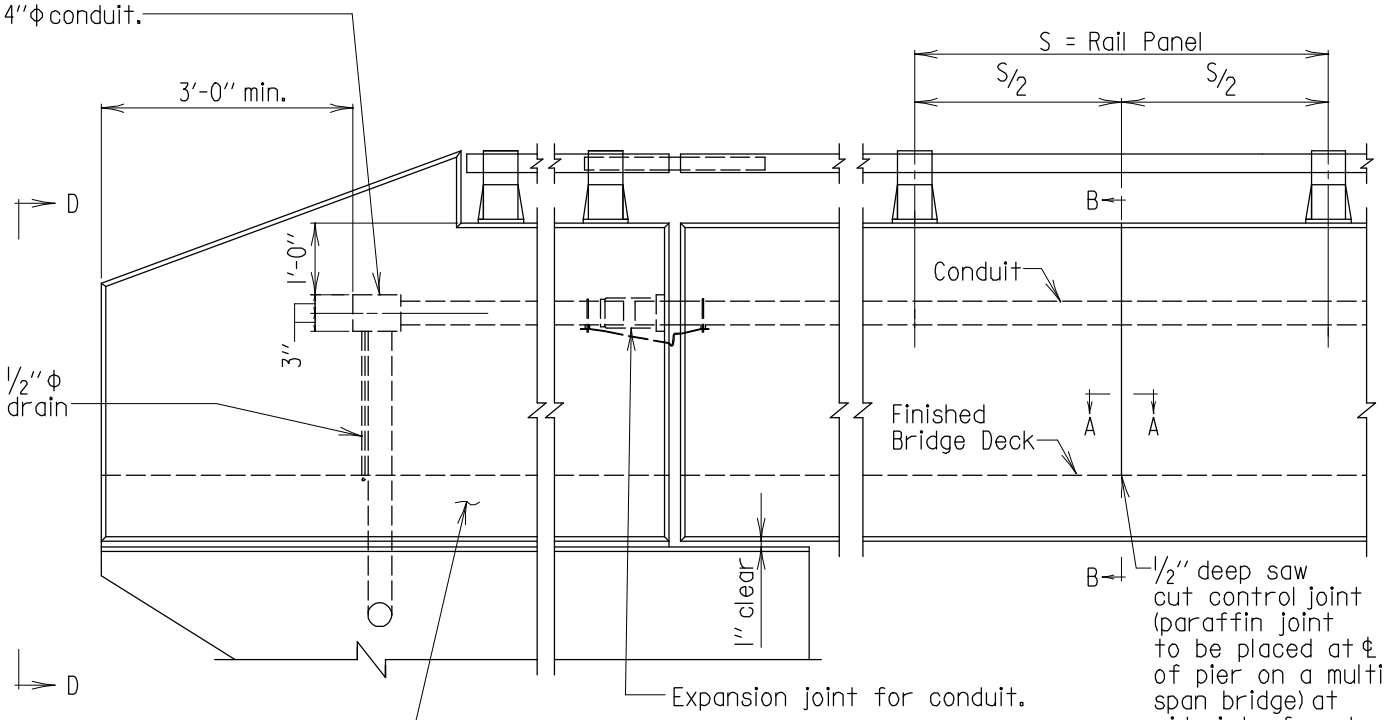

ELEVATION

Scale: 3/8" = 1'-0"

Note: For Section A-A and B-B see sheets 2 & 3 of 3. For View D-D see sheet 2 of 3.

Notes:

1. The conduit and junction box are to be placed only when indicated in the Superstructure "Typical Section." If ℄ to ℄ of end junction boxes exceed 200', then additional junction boxes shall be placed in parapet, between control joints, so that the maximum distance between boxes is 200'. Junction boxes for light standards, may be utilized. All junction boxes to have 1/2"Φ drain at drain at low point of box.
2. Conduit may be either PVC or galvanized pipe.

APPROVAL		
E.S. Freedman DIRECTOR OFFICE OF STRUCTURS DATE: 6/1/05		
REVISIONS		
SHA	FHWA	
1-9-08		
4-16-08		
3-5-14		
FHWA APPROVAL		
DATE:		

STATE OF MARYLAND
DEPARTMENT OF TRANSPORTATION
STATE HIGHWAY ADMINISTRATION
OFFICE OF STRUCTURES

PARAPET CONTROL JOINT AND SINGLE CONDUIT PLACEMENT WITH 42" F-SHAPE PARAPET

STANDARD NO. SUP-TB(CP)-201 SHEET 1 OF 3

SUPER TRAFFIC BARRIER

OLD NO. BR-SS(6.09)-05-70B

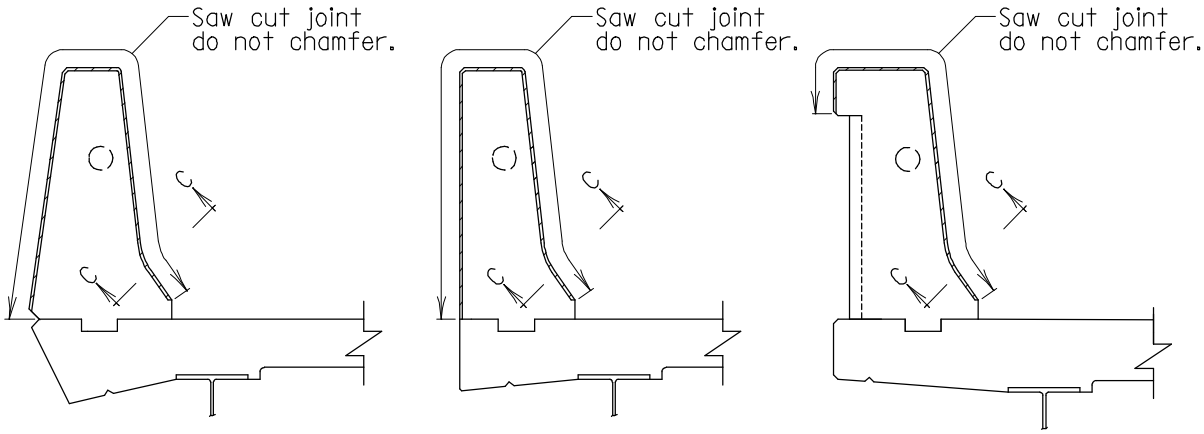

SECTION B-B

Scale: 3/8" = 1-0"

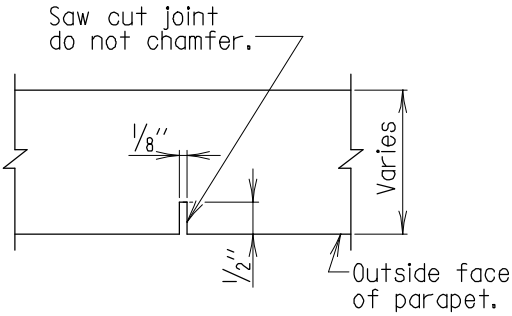

SECTION A-A

Scale: None

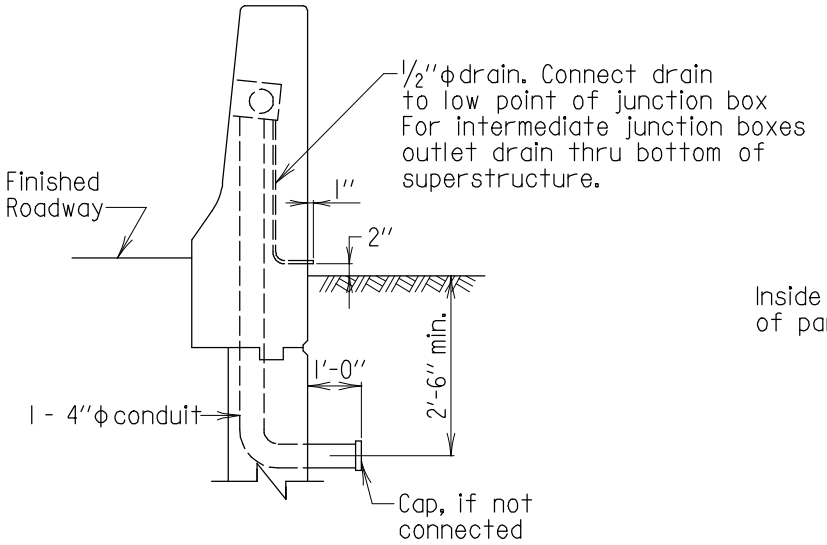

VIEW D-D

Scale: 3/8" = 1'-0"

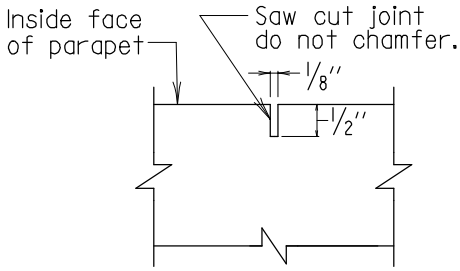

SECTION C-C

Scale: None

Notes:

1. Place saw cut joint at center of every rail panel.
2. Parapet is placed continuously.
3. Saw cut control joint to be sawed same day as concrete is poured.
4. Fencing and railing not shown.

APPROVAL
R.S. Freedman DIRECTOR OFFICE OF STRUCTURES
DATE: 6/1/05

REVISIONS	
SHA	FHWA

FHWA APPROVAL
DATE:

STATE OF MARYLAND
DEPARTMENT OF TRANSPORTATION
STATE HIGHWAY ADMINISTRATION
OFFICE OF STRUCTURES

PARAPET CONTROL JOINT AND SINGLE CONDUIT PLACEMENT WITH 42" F-SHAPE PARAPET

STANDARD NO. SUP-TB(CP)-201 SHEET 2 OF 3

SUPER TRAFFIC BARRIER

OLD NO. BR-SS(6.09)-05-70B

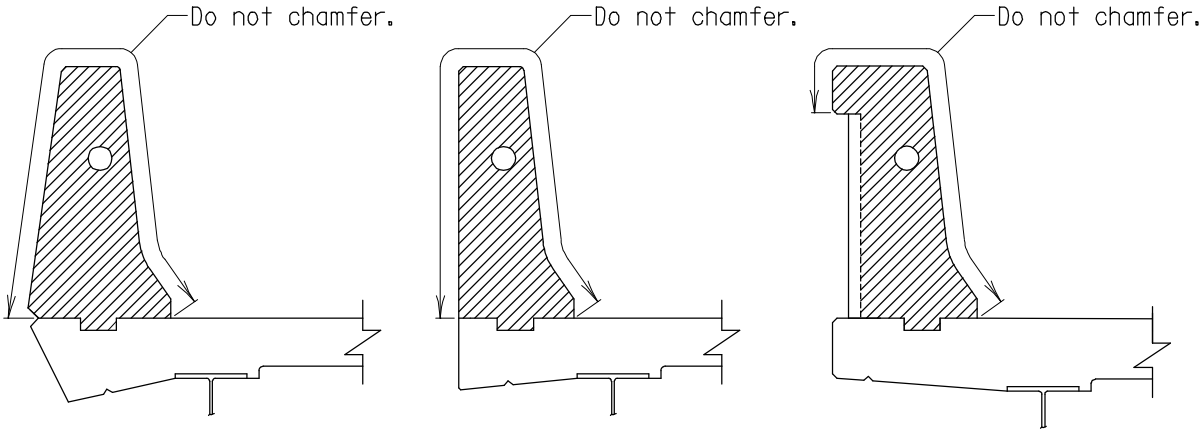

SECTION B-B

Scale: 3/8" = 1-0"

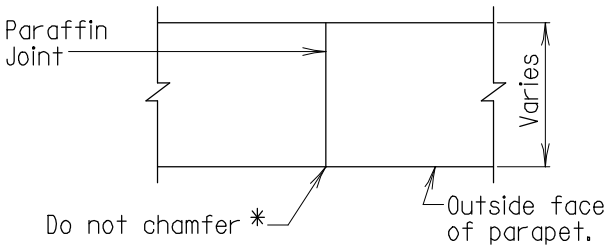

SECTION A-A

Scale: None

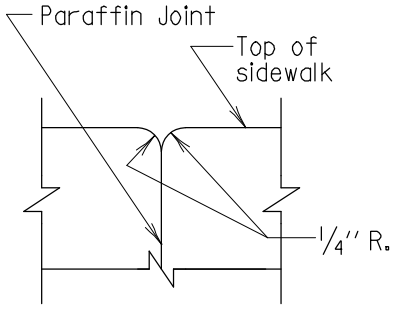

SECTION C-C

Scale: Full

*In order to insure a smooth and acceptable surface, 420.03.11 (Construction Joints) will be strictly adhered to.

Notes:

1. Place vertical paraffin joint, shown hatched, at centerline of pier on multi span bridges.
2. Joints shall be formed by placing alternate sections.
3. The placement of adjacent sections shall have a 40 hour delay between placements.
4. Railing and fencing not shown.

APPROVAL
E.S. Freedman DIRECTOR OFFICE OF STRUCTURES
DATE: 6/1/05

REVISIONS	
SHA	FHWA

FHWA APPROVAL
DATE:

STATE OF MARYLAND
DEPARTMENT OF TRANSPORTATION
STATE HIGHWAY ADMINISTRATION
OFFICE OF STRUCTURES

PARAPET CONTROL JOINT AND SINGLE CONDUIT PLACEMENT WITH 42" F-SHAPE PARAPET

STANDARD NO. SUP-TB(CP)-201 SHEET 3 OF 3

SUPER TRAFFIC BARRIER

OLD NO. BR-SS(6.09)-05-70B

Note: Details shown are for single rail; double rail and fencing details are similar. On bridges with no fencing or railing see General Plan and Elevation for parapet control joint spacing.

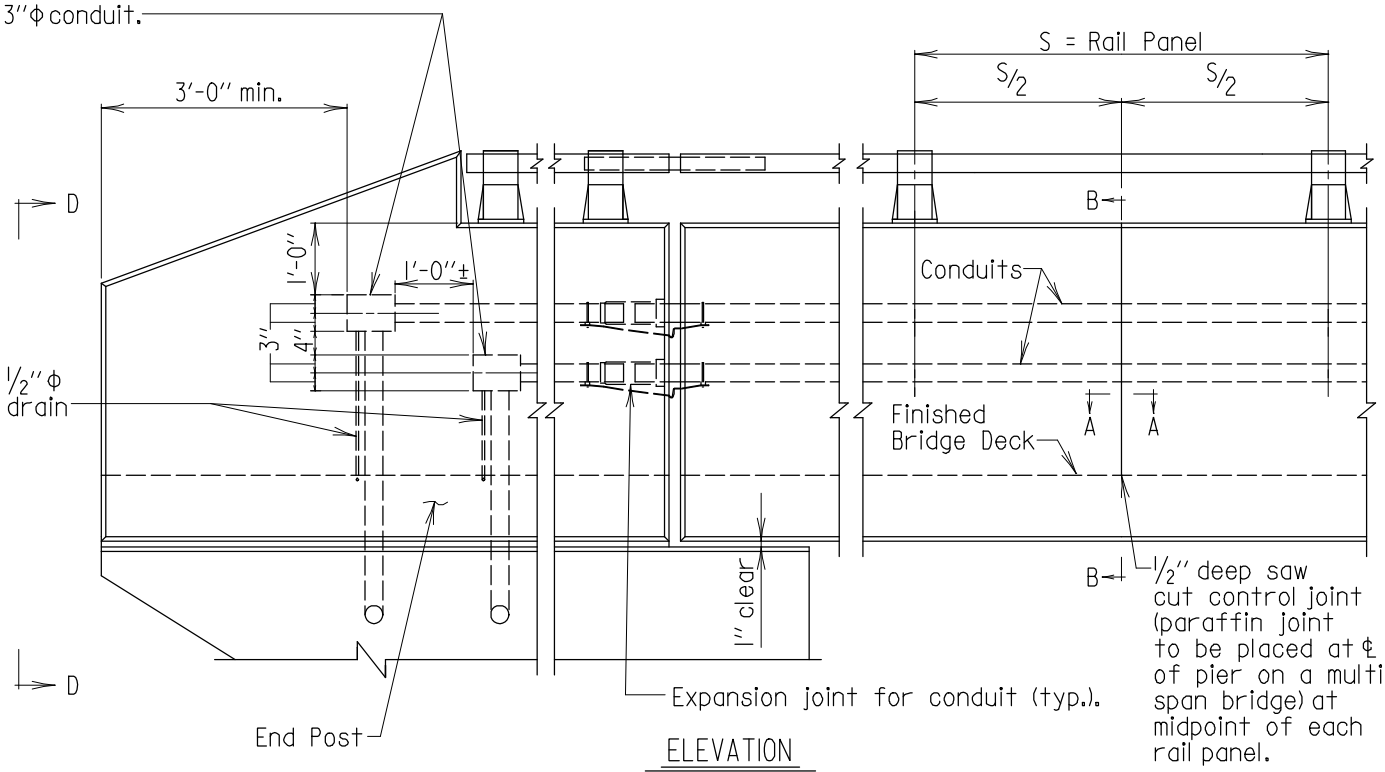

ELEVATION

Scale: 3/8" = 1'-0"

Note: For Section A-A & B-B see sheet 2 of 3.
For View D-D see sheet 2 of 3.
For Sections A-A and B-B at centerline of pier on multi-span continuous bridges, see sheet 3 of 3.

Notes:

1. The conduits and junction boxes are to be placed only when indicated in the Superstructure "Typical Section." If ℄ to ℄ of end junction boxes exceed 200', then additional junction boxes shall be placed in parapet, between control joints, so that the maximum distance between boxes is 200'. Junction boxes for light standards, may be utilized. All junction boxes to have 1/2"Φ drain at drain at low point of box.
2. Conduit may be either PVC or galvanized pipe.

APPROVAL		
C.S. Freedman DIRECTOR OFFICE OF STRUCTURES DATE: 6/1/05		
REVISIONS		
SHA	FHWA	
10-13-06		
1-9-08		
4-16-08		
3-5-14		
FHWA APPROVAL		
DATE:		

STATE OF MARYLAND
DEPARTMENT OF TRANSPORTATION
STATE HIGHWAY ADMINISTRATION
OFFICE OF STRUCTURES

PARAPET CONTROL JOINT AND DUAL CONDUIT PLACEMENT WITH 42" F-SHAPE PARAPET

STANDARD NO. SUP-TB(CP)-301 SHEET 1 OF 3

SUPER TRAFFIC BARRIER

OLD NO. BR-SS(6.37)-05-247B

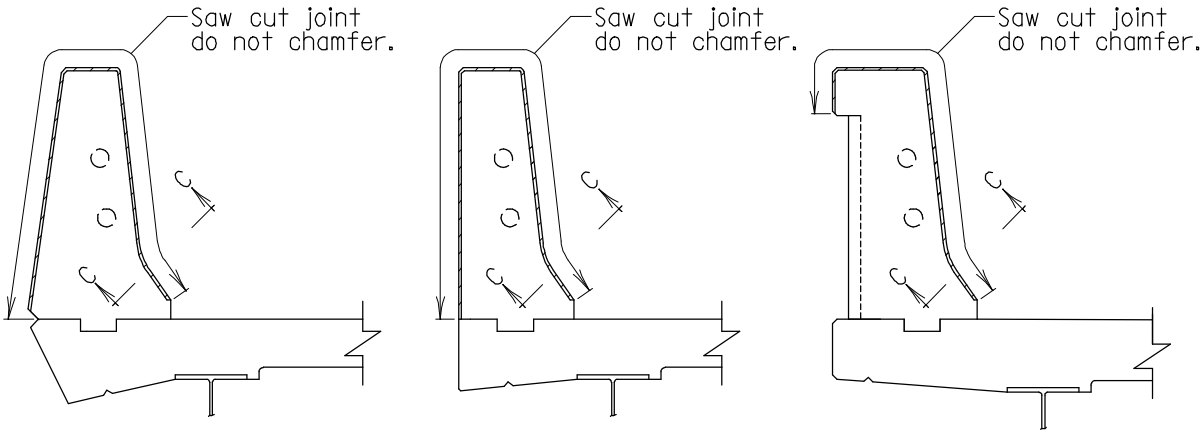

SECTION B-B

Scale: 3/8" = 1-0"

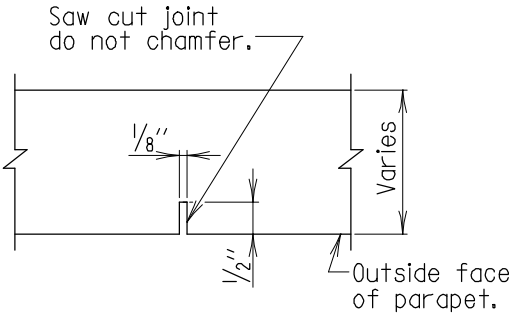

SECTION A-A

Scale: None

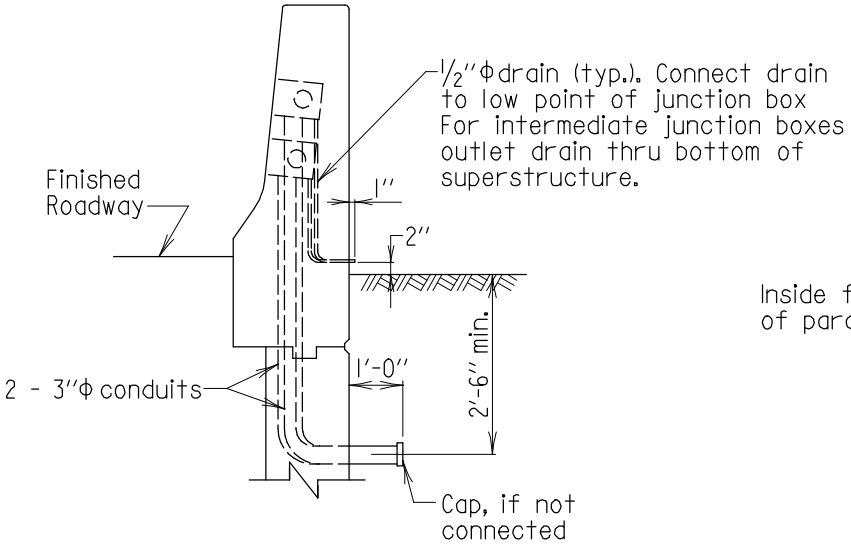

VIEW D-D

Scale: 3/8" = 1'-0"

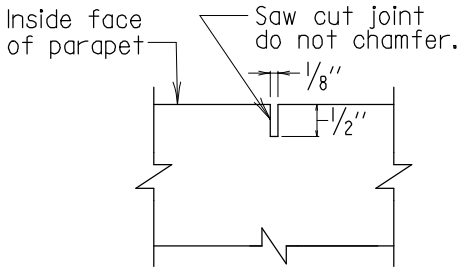

SECTION C-C

Scale: None

Notes:

1. Place saw cut joint at center of every rail panel.
2. Parapet is placed continuously.
3. Saw cut control joint to be sawed same day as concrete is poured.
4. Fencing and railing not shown.

APPROVAL
R.S. Freedman DIRECTOR OFFICE OF STRUCTURES
DATE: 6/1/05

REVISIONS	
SHA	FHWA

FHWA APPROVAL
DATE:

STATE OF MARYLAND
DEPARTMENT OF TRANSPORTATION
STATE HIGHWAY ADMINISTRATION
OFFICE OF STRUCTURES

PARAPET CONTROL JOINT AND DUAL CONDUIT PLACEMENT WITH 42" F-SHAPE PARAPET

STANDARD NO. SUP-TB(CP)-301 SHEET 2 OF 3

SUPER TRAFFIC BARRIER

OLD NO. BR-SS(6.37)-05-247B

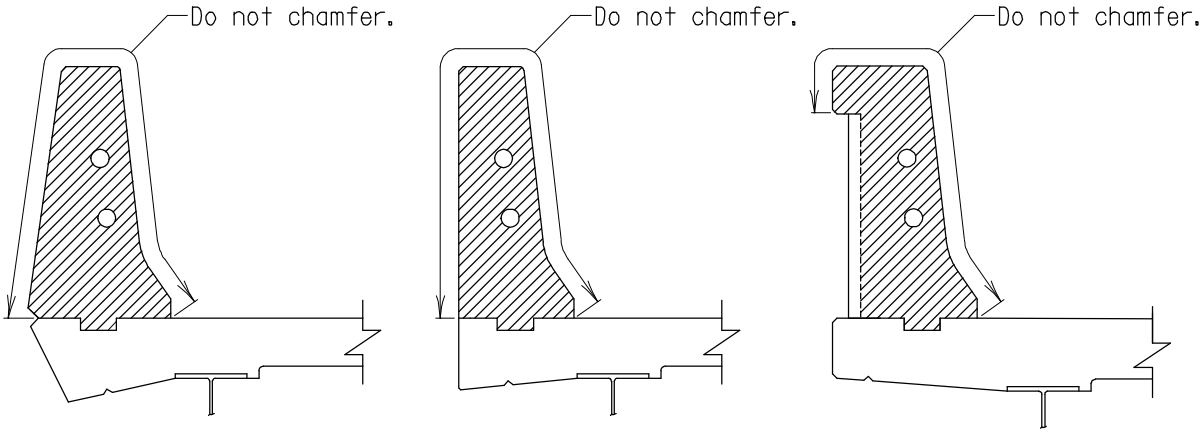

SECTION B-B

Scale: 3/8" = 1-0"

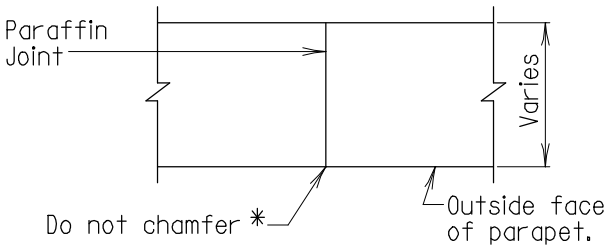

SECTION A-A

Scale: None

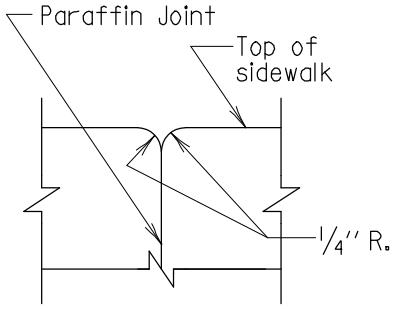

SECTION C-C

Scale: Full

*In order to insure a smooth and acceptable surface, 420.03.11 (Construction Joints) will be strictly adhered to.

Notes:

1. Place vertical paraffin joint, shown hatched, at centerline of pier on multi-span continous bridges.
2. The placement of adjacent sections shall have a 40 hour delay between placements.
3. Railing and fencing not shown.

APPROVAL
E.S. Freedman DIRECTOR OFFICE OF STRUCTURES
DATE: 6/1/05

REVISIONS	
SHA	FHWA

FHWA APPROVAL
DATE:

STATE OF MARYLAND
DEPARTMENT OF TRANSPORTATION
STATE HIGHWAY ADMINISTRATION
OFFICE OF STRUCTURES

PARAPET CONTROL JOINT AND DUAL CONDUIT PLACEMENT WITH 42" F-SHAPE PARAPET

STANDARD NO. SUP-TB(CP)-301 SHEET 3 OF 3

SUPER TRAFFIC BARRIER

OLD NO. BR-SS(6.37)-05-247B

SUPERSTRUCTURE

TRAFFIC BARRIERS

MISCELLANEOUS

(SUP-TB(MISC))

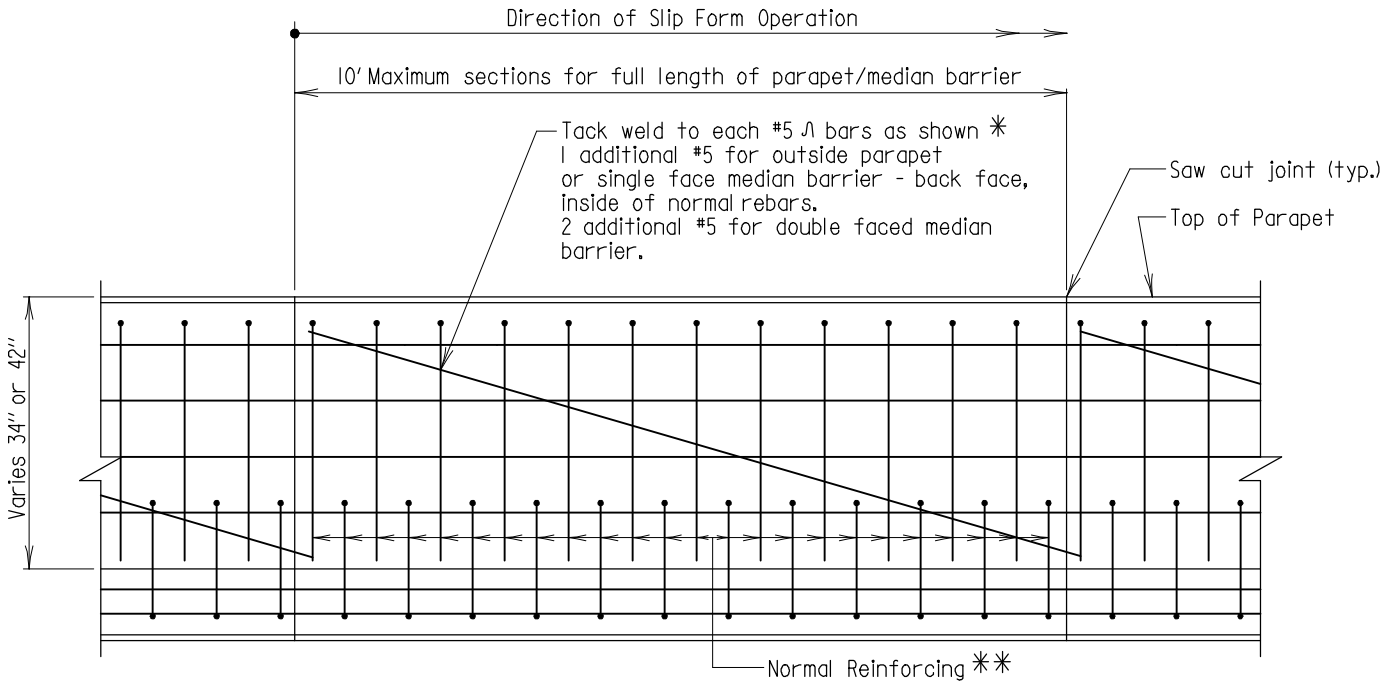

✳ Coat weld with epoxy touch up.

✳✳ See appropiate standard for rebar types and spacing pattern.

ELEVATION

Scale: 1/2" = 1'-0"

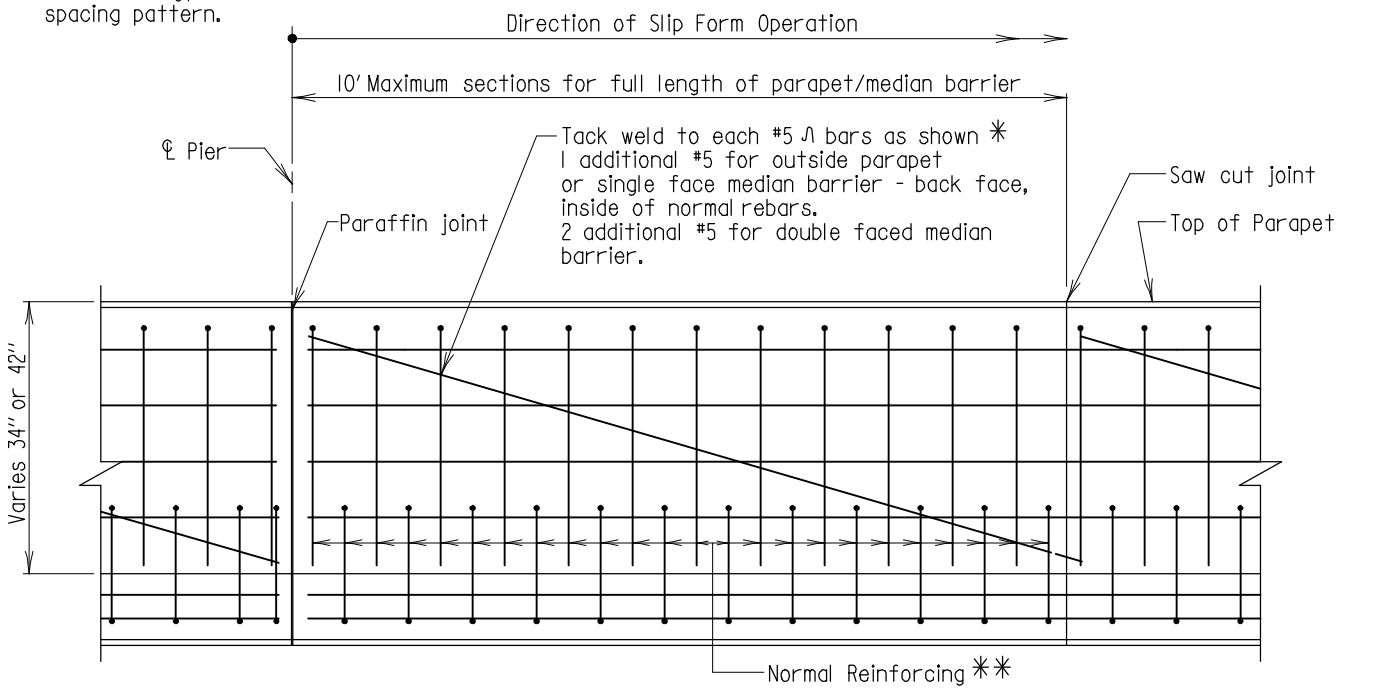

ELEVATION-MULTISPAN AT PIER

Scale: 1/2" = 1'-0"

42" PARAPET OR MEDIAN

Note:

1. All longitudinal bars shall be placed continuously in the parapet/median barrier from expansion opening to expansion opening in a simple span bridge and expansion opening to centerline of pier in a multi span bridge.

APPROVAL	
E.S. Freedman DIRECTOR OFFICE OF STRUCTURES	
DATE: 2/17/94	
REVISIONS	
SHA	FHWA
10-22-03	
FHWA APPROVAL	
DATE:	

STATE OF MARYLAND
DEPARTMENT OF TRANSPORTATION
STATE HIGHWAY ADMINISTRATION
OFFICE OF STRUCTURES

ADDITIONAL REINFORCING FOR SLIP FORMING PARAPETS AND MEDIAN BARRIERS

STANDARD NO. SUP-TB(MISC)-101 SHEET 1 OF 1

SUPER TRAFFIC BARRIER

OLD NO. BR-SS(6.41)-94-297

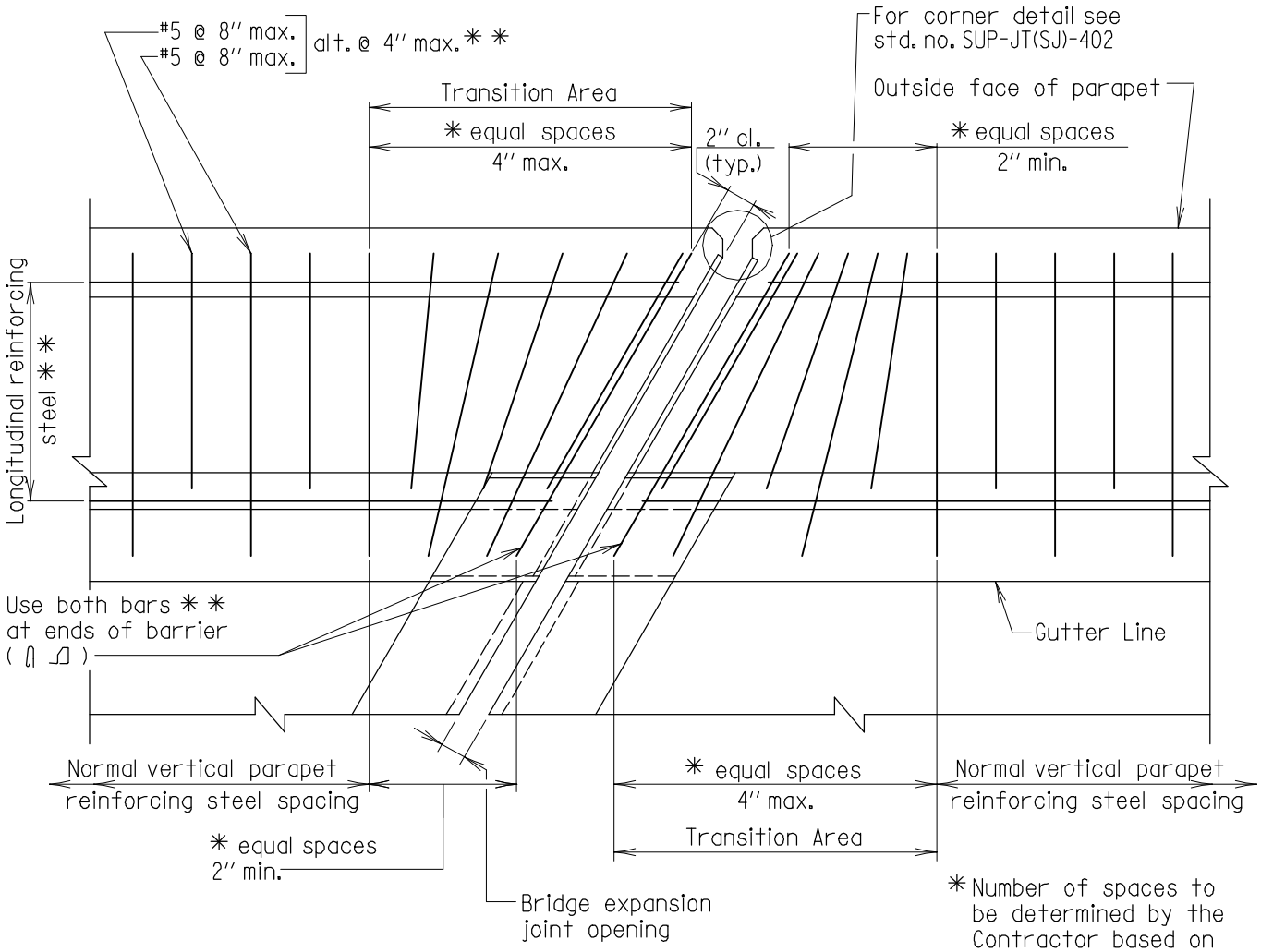

* Number of spaces to be determined by the Contractor based on the skew angle as part of the Shop Drawing Process.

* * Number, shape and size of bars is contingent upon the height and style of parapet that is chosen. See Typical Section for details.

PLAN

Scale: 1" = 1'-0"

Note:
Dashed area of reinforcing to be eliminated in transition area.

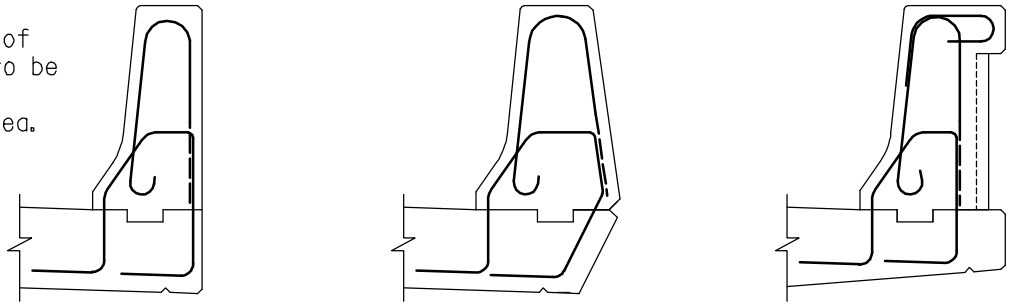

REINFORCING PATTERN FOR TRANSITION AREA ONLY

Notes:
1. All reinforcing steel to be epoxy coated.
2. Compression seal not shown.

APPROVAL	
E.S. Freedman DIRECTOR OFFICE OF STRUCTURES	
DATE: 1/18/05	
REVISIONS	
SHA	FHWA

FHWA APPROVAL
DATE:

STATE OF MARYLAND
DEPARTMENT OF TRANSPORTATION
STATE HIGHWAY ADMINISTRATION
OFFICE OF STRUCTURES

PARAPET REINFORCING STEEL PLACEMENT AT EXPANSION JOINT

STANDARD NO. SUP-TB(MISC)-201 SHEET 1 OF 1

SUPER TRAFFIC BARRIER

OLD NO. BR-SS(6.58)-05-361

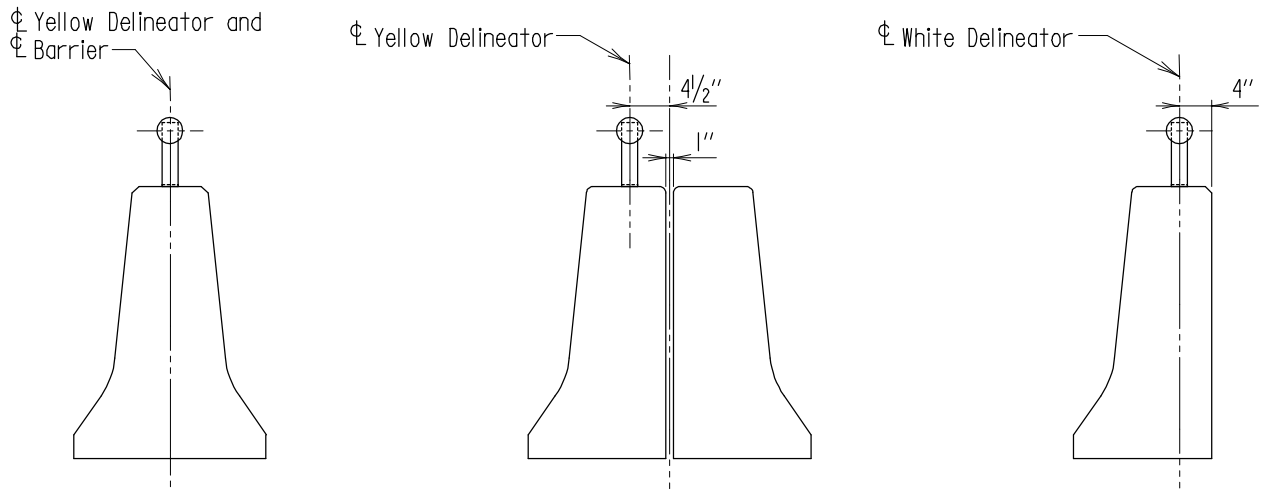

TRANSVERSE LOCATION OF DELINEATORS

Scale: ½" = 1'-0"

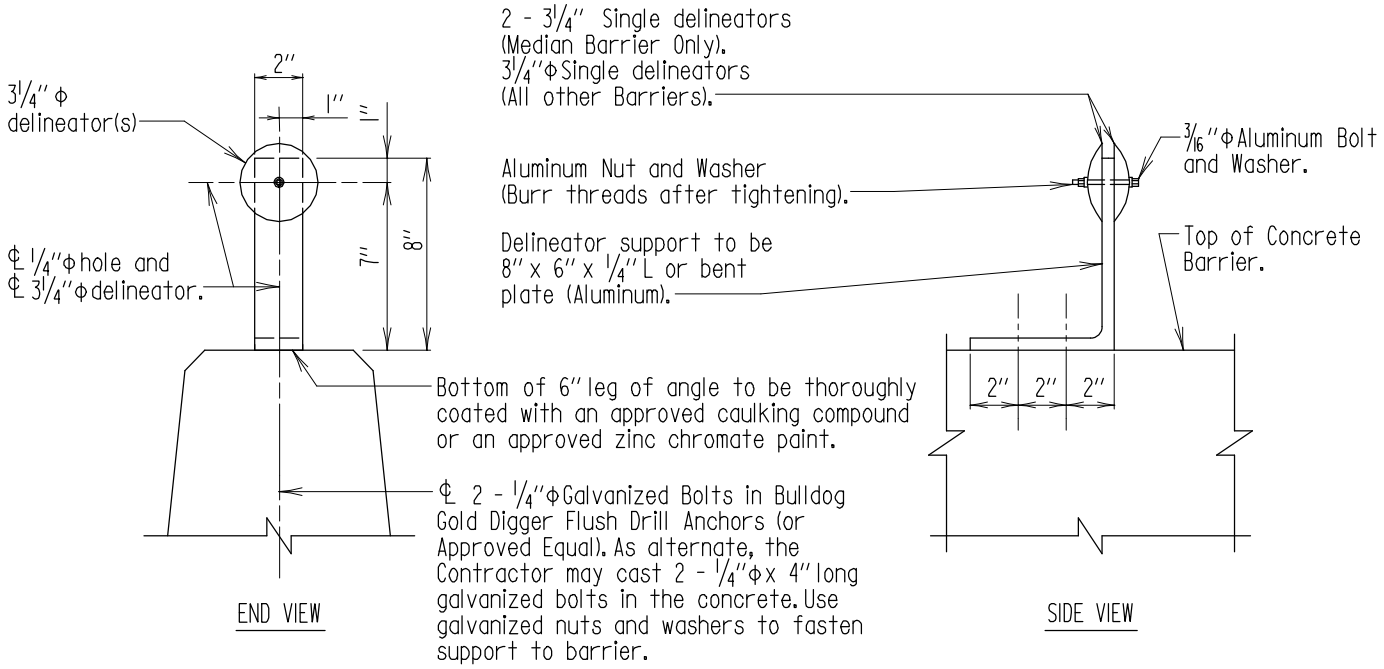

CONCRETE BARRIER DELINEATOR

Scale: 1½" = 1'-0"

* SPACING OF DELINEATORS	
Radius of Horizontal Curve	C/C Distance Between Delineators
Less than 2000'	115'
2000' to 3000'	130'
3000' to 5000'	160'
Over 5000'	200'
Tangent Area	200'

* Place one delineator at each end of each wall, even if wall is shorter than lengths indicated below.

APPROVAL	
E.S. Freedman DIRECTOR OFFICE OF STRUCTURES	
DATE: 6/20/75	
REVISIONS	
SHA	FHWA
10-19-77	10-19-77
6-10-80	7-29-80
10-22-03	
FHWA APPROVAL	
DATE: 8-24-76	

STATE OF MARYLAND
DEPARTMENT OF TRANSPORTATION
STATE HIGHWAY ADMINISTRATION
OFFICE OF STRUCTURES

CONCRETE BARRIER DELINEATOR

STANDARD NO. SUP-TB(MISC)-301 SHEET 1 OF 1

SUPER TRAFFIC BARRIER

OLD NO. M(5.11)-75-14

SUPERSTRUCTURE

SUPPORT BRACKETS FOR LIGHT STANDARDS

(SUP-SB)

SUPERSTRUCTURE

SUPPORT BRACKETS FOR LIGHT STANDARDS

42” F-SHAPE

(SUP-SB(42F))

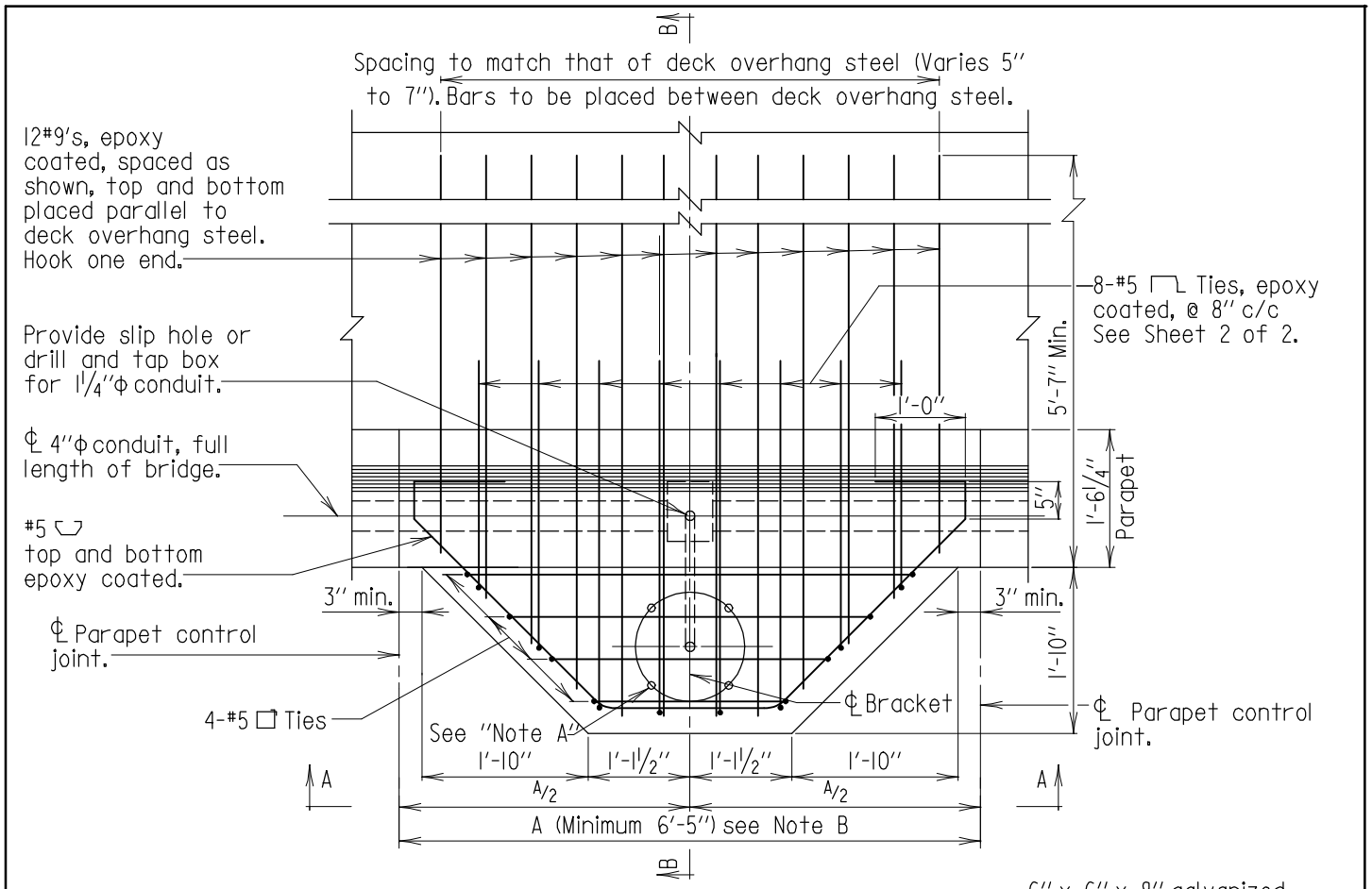

PLAN

Scale: ½"=1'-0"

Note B:
Station for light post support bracket shown on Plans is only approximate. ℄ Bracket to be located midway between parapet control joints.
A = Normal parapet control joint spacing (adjust as necessary to meet minimum limitations).
If a light post is placed at ℄ of pier, eliminate the control joint at the ℄ of pier, The first control joint beyond, on one side only shall be changed to a paraffin joint.

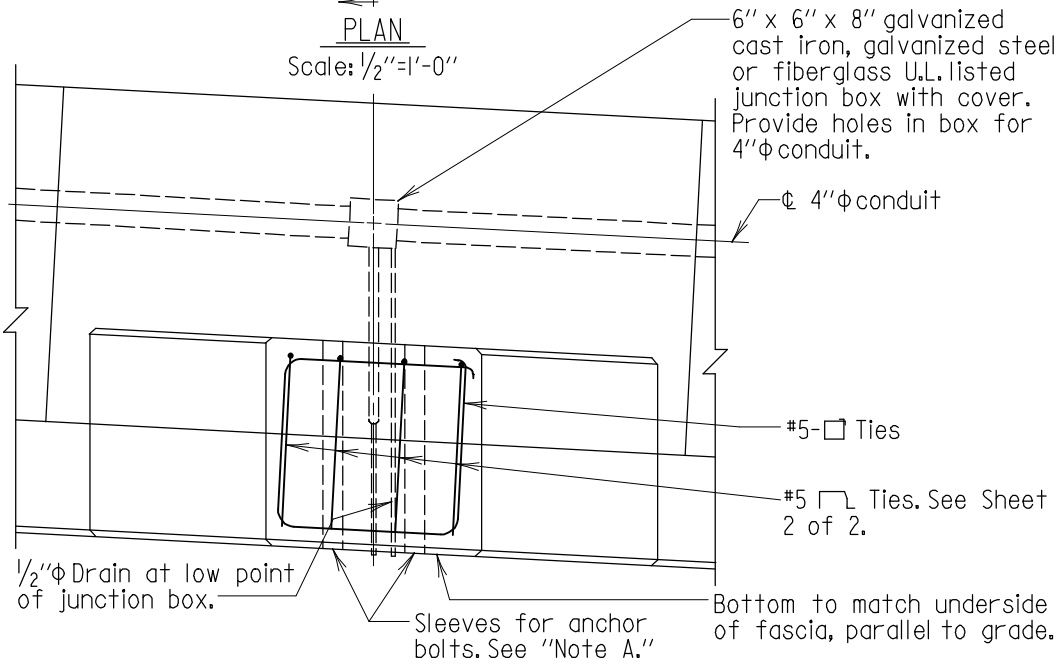

SECTION A-A

Scale: ½"=1'-0"

For Section "B-B" see Sheet 2 of 2.

Note:
Deck overhang reinforcing steel not shown.

Note A:
Contractor is to contact the District Engineer in writing prior to placing sleeves for anchor bolts, to ascertain the bolt circle dimension and size of anchor bolts that will be used on this project. All light poles to be set plumb using leveling nuts on anchor bolts. Max. height of pole for this detail is 40'.

42" STRAIGHT BACK

APPROVAL	
E.S. Freedman DIRECTOR OFFICE OF STRUCTURES	
DATE: 6/1/05	
REVISIONS	
SHA	FHWA
10-9-07	
1-9-08	
FHWA APPROVAL	
DATE:	

STATE OF MARYLAND
DEPARTMENT OF TRANSPORTATION
STATE HIGHWAY ADMINISTRATION
OFFICE OF STRUCTURES

VERIFIED 10-9-2007 LRFD

SUPPORT BRACKET FOR BRIDGE MOUNTED LIGHT POST WITH SINGLE CONDUIT AND 42" F-SHAPE PARAPET WITH STRAIGHT BACK

STANDARD NO. SUP-SB(42F)-101 SHEET 1 OF 2

SUPER - SUPPORT BRACKT

OLD NO. BR-SS(6.04)-05-7B(L)

Note:
Conduit, drain tubes and cap may be galvanized steel or PVC.

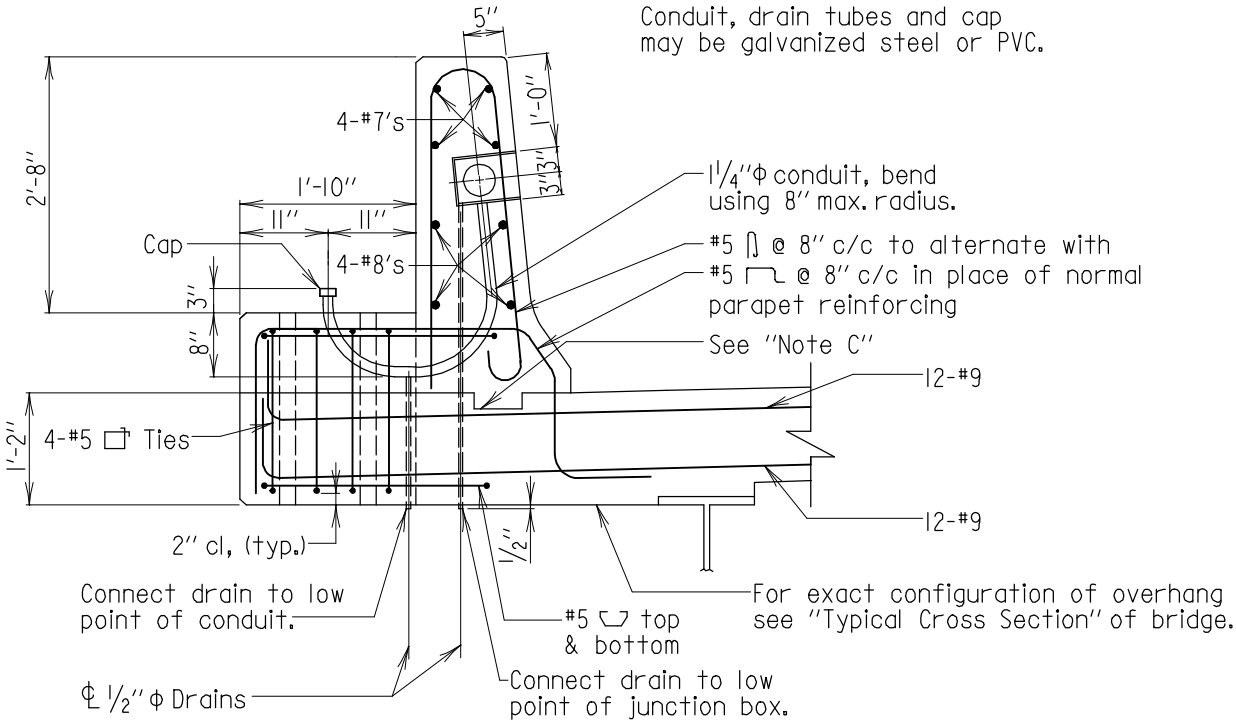

SECTION B-B FOR "F-SHAPE" BARRIER

Scale: ½"=1'-0"

Note:
All #7 and #8 bars shall be placed continuously in the parapet from expansion opening to expansion opening in a simple span bridge and expansion opening to centerline of pier in a multispan bridge. Refer to SUP-TB(42F)-101.

Note C:
The constr. jt. between the F-shape parapet and the deck may vary slightly from the joint indicated. For exact details and location of the joint see "Superstructure" Sheet.

42" STRAIGHT BACK

APPROVAL	
E.S. Freedman DIRECTOR OFFICE OF STRUCTURES	
DATE: 6/1/05	
REVISIONS	
SHA	FHWA
FHWA APPROVAL	
DATE:	

STATE OF MARYLAND
DEPARTMENT OF TRANSPORTATION
STATE HIGHWAY ADMINISTRATION
OFFICE OF STRUCTURES

VERIFIED 10-9-2007 LRFD

SUPPORT BRACKET FOR BRIDGE MOUNTED LIGHT POST WITH SINGLE CONDUIT AND 42" F-SHAPE PARAPET WITH STRAIGHT BACK

STANDARD NO. SUP-SB(42F)-101 SHEET 2 OF 2

SUPER - SUPPORT BRACKET

OLD NO. BR-SS(6.04)-05-7B(L)

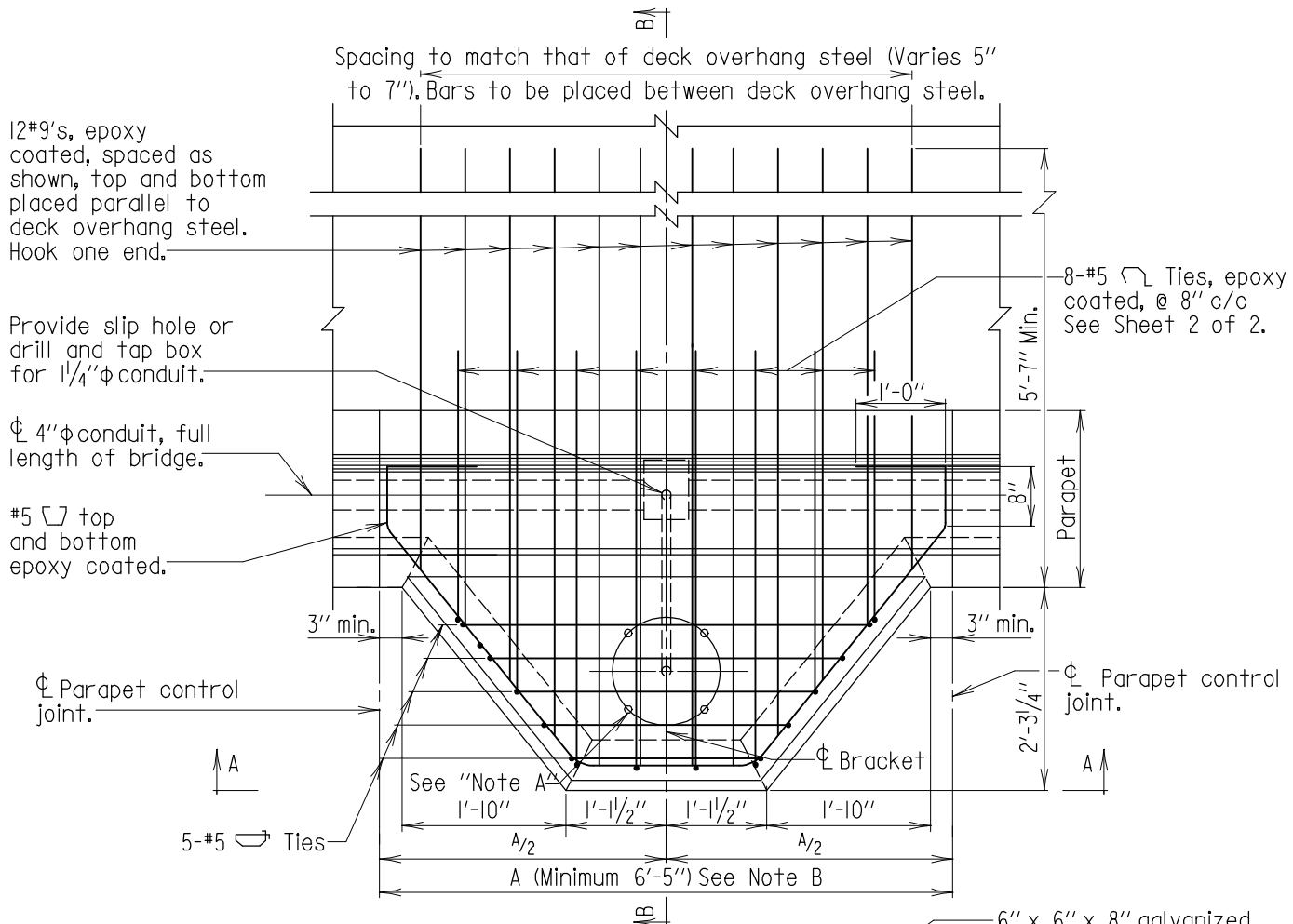

PLAN

Scale: 1/2"=1'-0"

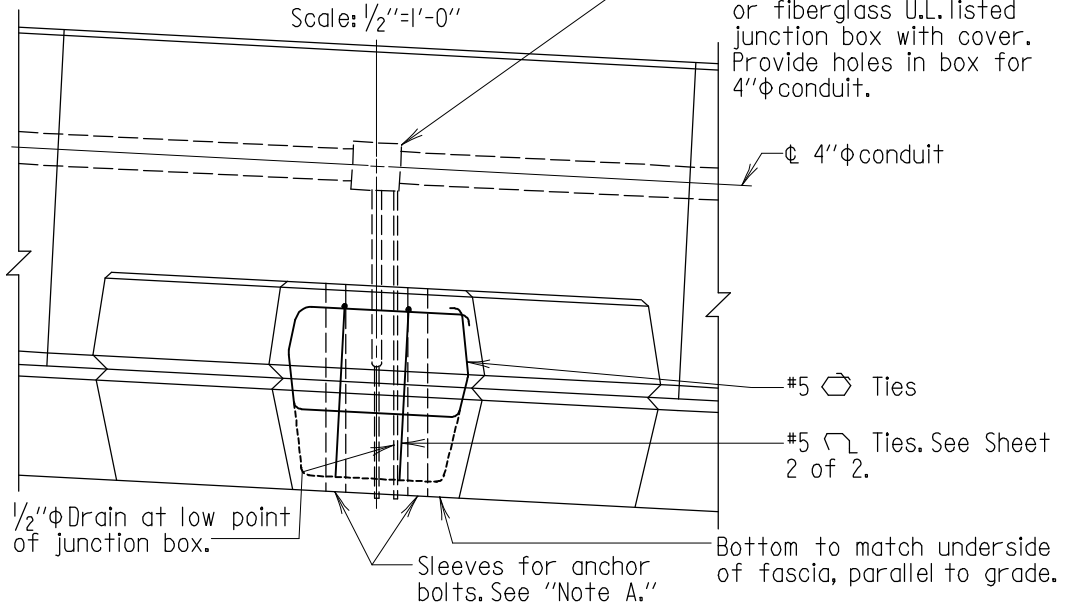

Note B:
Station for light post support bracket shown on Plans is only approximate. ℄ Bracket to be located midway between parapet control joints.
A= Normal parapet contol joint spacing (Adjust as necessary to meet minimum limitations).
If a light post is placed at ℄ of pier, eliminate the control joint at the ℄ of pier, The first control joint beyond, on one side only shall be changed to a paraffin joint.

Note:
Deck overhang reinforcing steel not shown.

Note A:
Contractor is to contact the District Engineer in writing prior to placing sleeves for anchor bolts, to ascertain the bolt circle dimension and size of anchor bolts that will be used on this project. All light poles to be set plumb using leveling nuts on anchor bolts. Max. height of pole for this detail is 40'.

SECTION A-A

Scale: 1/2"=1'-0"

For Section "B-B" see Sheet 2 of 2.

42" DIAMOND BACK

APPROVAL
E.S. Freedman DIRECTOR OFFICE OF STRUCTURES
DATE: 6/1/05

REVISIONS	
SHA	FHWA
11-26-07	
1-9-08	

FHWA APPROVAL	
DATE:	

STATE OF MARYLAND
DEPARTMENT OF TRANSPORTATION
STATE HIGHWAY ADMINISTRATION
OFFICE OF STRUCTURES

VERIFIED 11-26-2007 LRFD

SUPPORT BRACKET FOR BRIDGE MOUNTED LIGHT POST WITH SINGLE CONDUIT AND 42" F-SHAPE PARAPET WITH DIAMOND BACK

STANDARD NO. SUP-SB(42F)-102 SHEET 1 OF 2

SUPER - SUPPORT BRACKET

OLD NO. BR-SS(6.28)-05-167B(L)

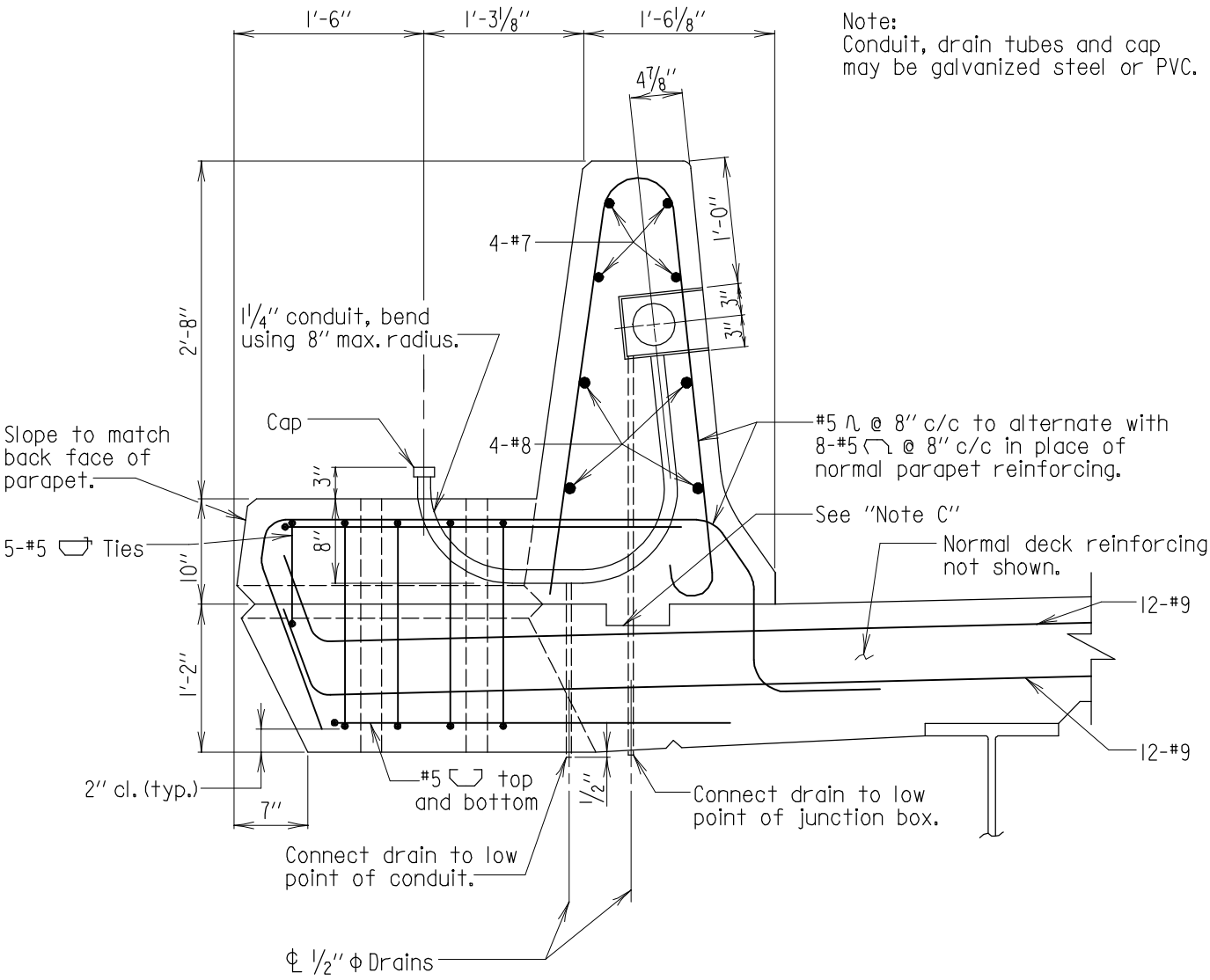

Note:
Conduit, drain tubes and cap may be galvanized steel or PVC.

SECTION B-B
Scale: 3/4"=1'-0"

Note:
All #7 and #8 bars shall be placed continuously in the parapet from expansion opening to expansion opening in a simple span bridge and expansion opening to centerline of pier in a multispan bridge. Refer to SUP-TB(42F)-102.

Note C:
The constr. jt. between the F-shape parapet and the deck may vary slightly from the joint indicated. For exact details and location of the joint see "Superstructure" Sheet.

42" DIAMOND BACK

APPROVAL	
E.S. Freedman DIRECTOR OFFICE OF STRUCTURES	
DATE: 6/1/05	
REVISIONS	
SHA	FHWA
11-26-07	
FHWA APPROVAL	
DATE:	

STATE OF MARYLAND
DEPARTMENT OF TRANSPORTATION
STATE HIGHWAY ADMINISTRATION
OFFICE OF STRUCTURES

VERIFIED 11-26-2007 LRFD

SUPPORT BRACKET FOR BRIDGE MOUNTED LIGHT POST WITH SINGLE CONDUIT AND 42" F-SHAPE PARAPET WITH DIAMOND BACK

STANDARD NO. SUP-SB(42F)-102 SHEET 2 OF 2

SUPER - SUPPORT BRACKET

OLD NO. BR-SS(6.28)-05-167B(L)

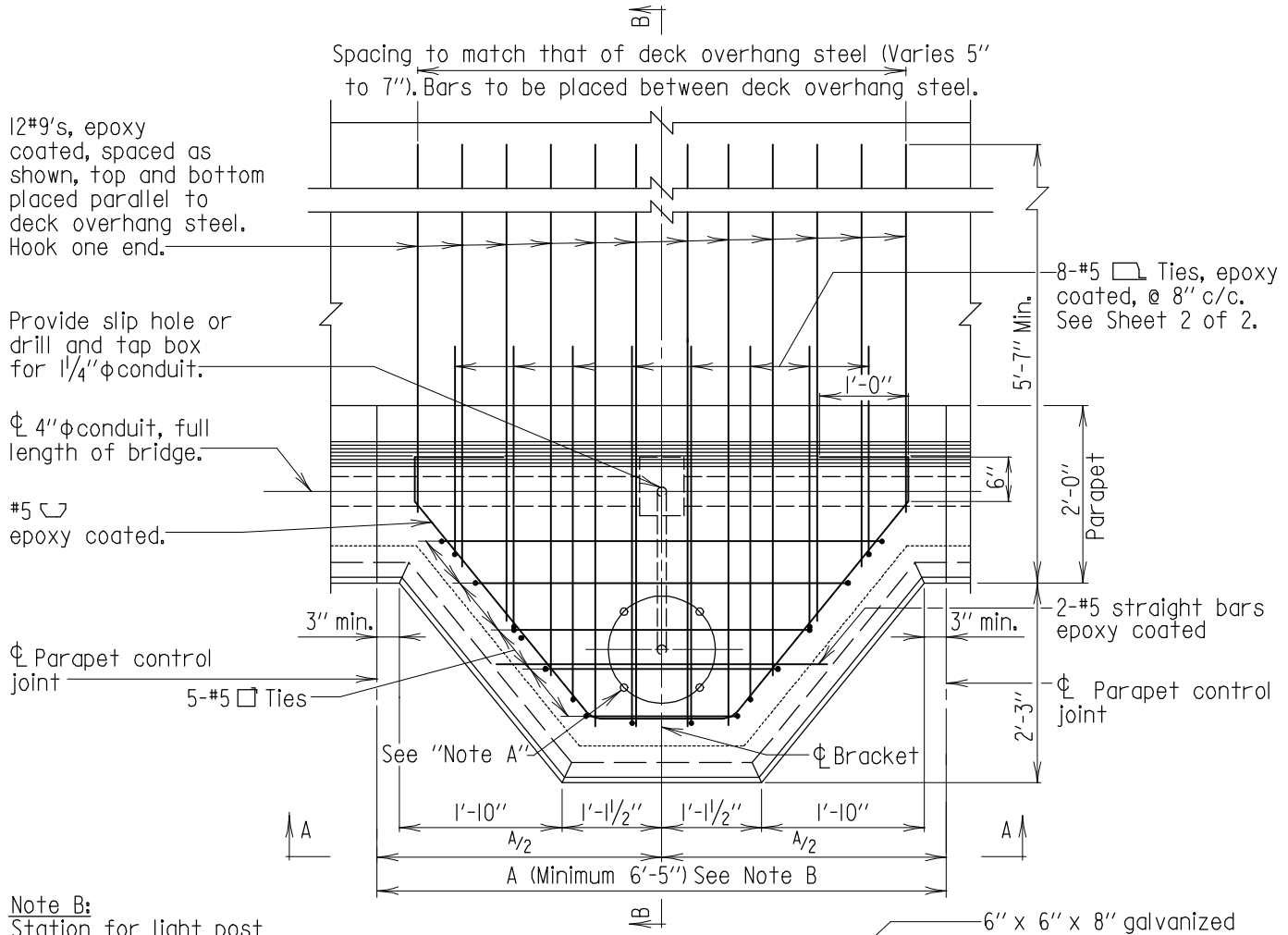

PLAN

Scale: ½"=1'-0"

Note B:
Station for light post support bracket shown on Plans is only approximate. ℄ Bracket to be located midway between parapet control joints.
A = Normal parapet control joint spacing (adjust as necessary to meet minimum limitations).
If a light post is placed at ℄ of pier, eliminate the control joint at the ℄ of pier, The first control joint beyond, on one side only shall be changed to a paraffin joint.

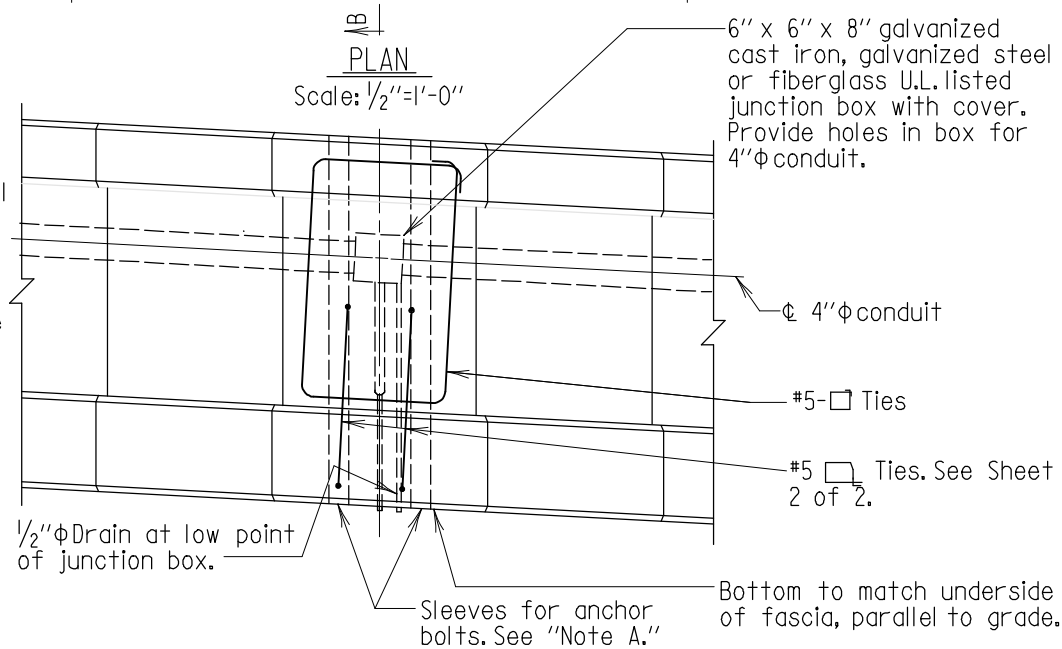

SECTION A-A

Scale: ½"=1'-0"

For Section "B-B" see Sheet 2 of 2.

Note:
Deck overhang reinforcing steel not shown.

Note A:
Contractor is to contact the District Engineer in writing prior to placing sleeves for anchor bolts, to ascertain the bolt circle dimension and size of anchor bolts that will be used on this project. All light poles to be set plumb using leveling nuts on anchor bolts. Max. height of pole for this detail is 40'.

42" RECESSED BACK

APPROVAL	
E.S. Freedman DIRECTOR OFFICE OF STRUCTURES	
DATE: 6/1/05	
REVISIONS	
SHA	FHWA
10-9-07	
1-9-08	
FHWA APPROVAL	
DATE:	

STATE OF MARYLAND
DEPARTMENT OF TRANSPORTATION
STATE HIGHWAY ADMINISTRATION
OFFICE OF STRUCTURES

VERIFIED 10-9-2007 LRFD

SUPPORT BRACKET FOR BRIDGE MOUNTED LIGHT POST WITH SINGLE CONDUIT AND 42" F-SHAPE PARAPET WITH ARCHITECTURAL FINISH

STANDARD NO. SUP-SB(42F)-103 SHEET 1 OF 2

SUPER - SUPPORT BRACKET

OLD NO. BR-SS(6.49)-05-351B(L)

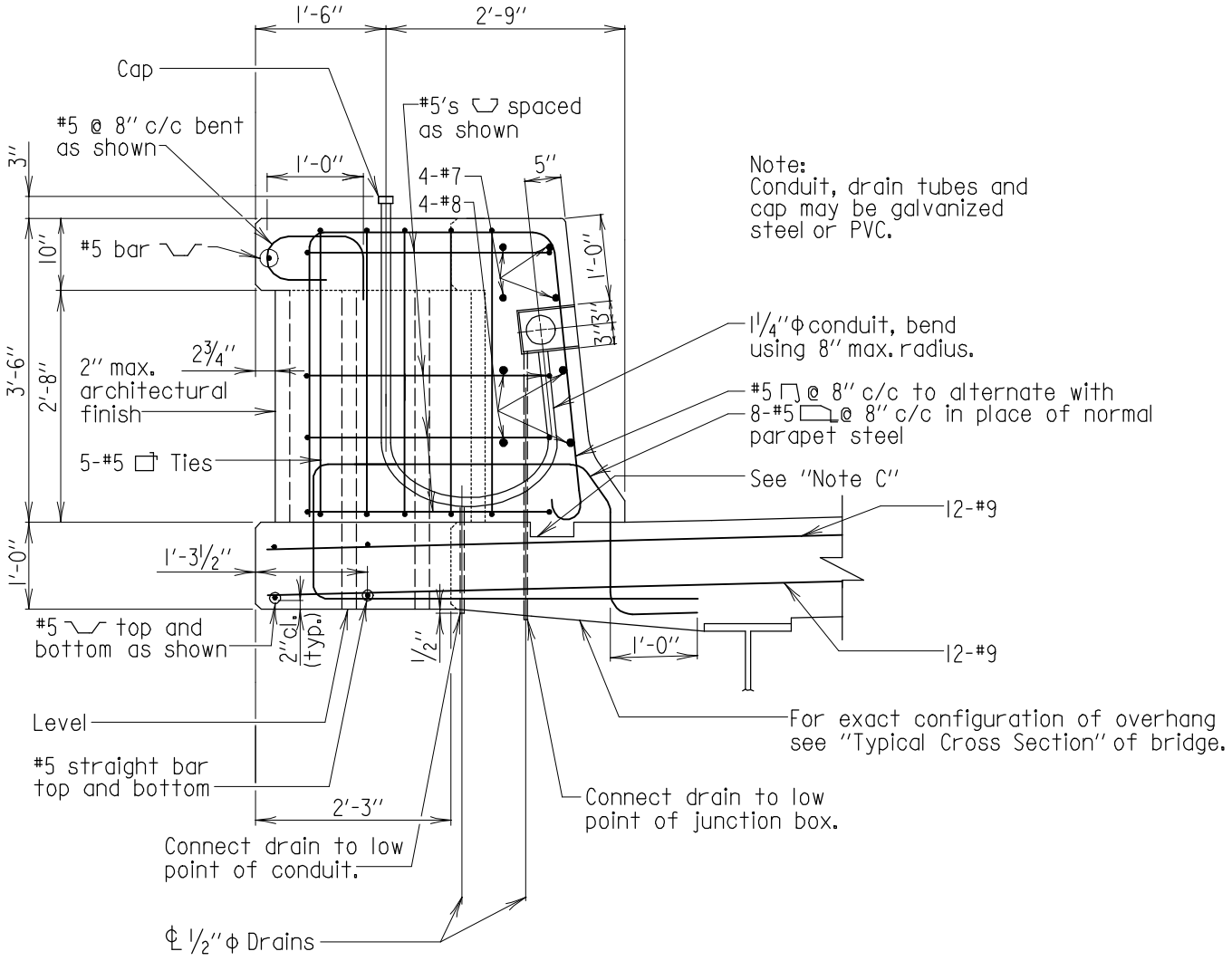

SECTION B-B FOR 42" F-SHAPE BARRIER

Scale: ½"=1'-0"

Note:
All #7 and #8 bars shall be placed continuously in the parapet from expansion opening to expansion opening in a simple span bridge and expansion opening to centerline of pier in a multispan bridge. Refer to SUP-TB(42F)-103.

Note C:
The constr. jt. between the F-shape parapet and the deck may vary slightly from the joint indicated. For exact details and location of the joint see "Superstructure" Sheet.

42" RECESSED BACK

APPROVAL	
R.S. Freedman DIRECTOR OFFICE OF STRUCTURES	
DATE: 6/1/05	
REVISIONS	
SHA	FHWA
10-9-07	
FHWA APPROVAL	
DATE:	

STATE OF MARYLAND
DEPARTMENT OF TRANSPORTATION
STATE HIGHWAY ADMINISTRATION
OFFICE OF STRUCTURES

VERIFIED 10-9-2007 LRFD

SUPPORT BRACKET FOR BRIDGE MOUNTED LIGHT POST WITH SINGLE CONDUIT AND 42" F-SHAPE PARAPET WITH ARCHITECTURAL FINISH

STANDARD NO. SUP-SB(42F)-103 SHEET 2 OF 2

SUPER - SUPPORT BRACKET

OLD NO. BR-SS(6.49)-05-351B(L)

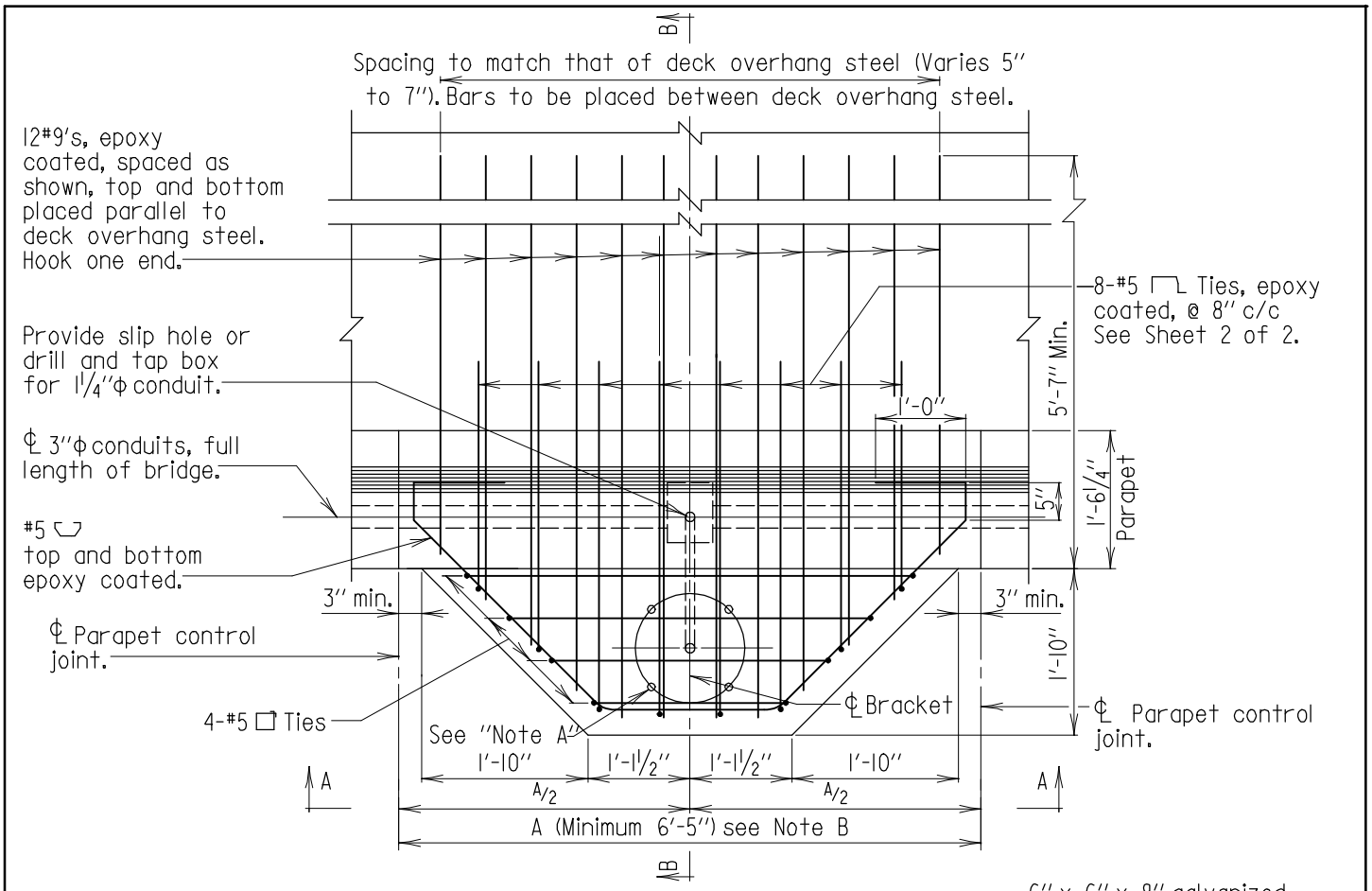

PLAN

Scale: ½"=1'-0"

Note B:
Station for light post support bracket shown on Plans is only approximate. ℄ Bracket to be located midway between parapet control joints.
A = Normal parapet control joint spacing (adjust as necessary to meet minimum limitations).
If a light post is placed at ℄ of pier, eliminate the control joint at the ℄ of pier, The first control joint beyond, on one side only shall be changed to a paraffin joint.

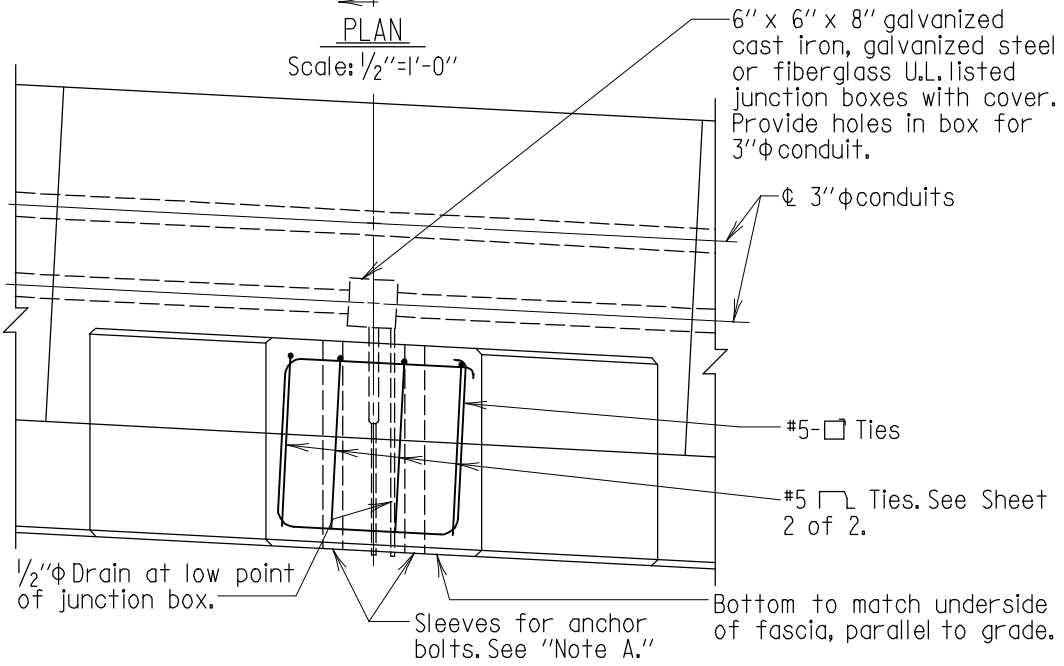

SECTION A-A

Scale: ½"=1'-0"

Note:
Deck overhang reinforcing steel not shown.

Note A:
Contractor is to contact the District Engineer in writing prior to placing sleeves for anchor bolts, to ascertain the bolt circle dimension and size of anchor bolts that will be used on this project. All light poles to be set plumb using leveling nuts on anchor bolts. Max. height of pole for this detail is 40'.

For Section "B-B" see Sheet 2 of 2.

42" STRAIGHT BACK

APPROVAL	
R.S. Freedman DIRECTOR OFFICE OF STRUCTURES	
DATE: 6/1/05	
REVISIONS	
SHA	FHWA
10-9-07	
1-9-08	
FHWA APPROVAL	
DATE:	

STATE OF MARYLAND
DEPARTMENT OF TRANSPORTATION
STATE HIGHWAY ADMINISTRATION
OFFICE OF STRUCTURES

VERIFIED 10-9-2007 LRFD

SUPPORT BRACKET FOR BRIDGE MOUNTED LIGHT POST WITH DUAL CONDUITS AND 42" F-SHAPE PARAPET WITH STRAIGHT BACK

STANDARD NO. SUP-SB(42F)-201 SHEET 1 OF 2

SUPER - SUPPORT BRACKET

OLD NO. BR-SS(6.38)-05-248B(L)

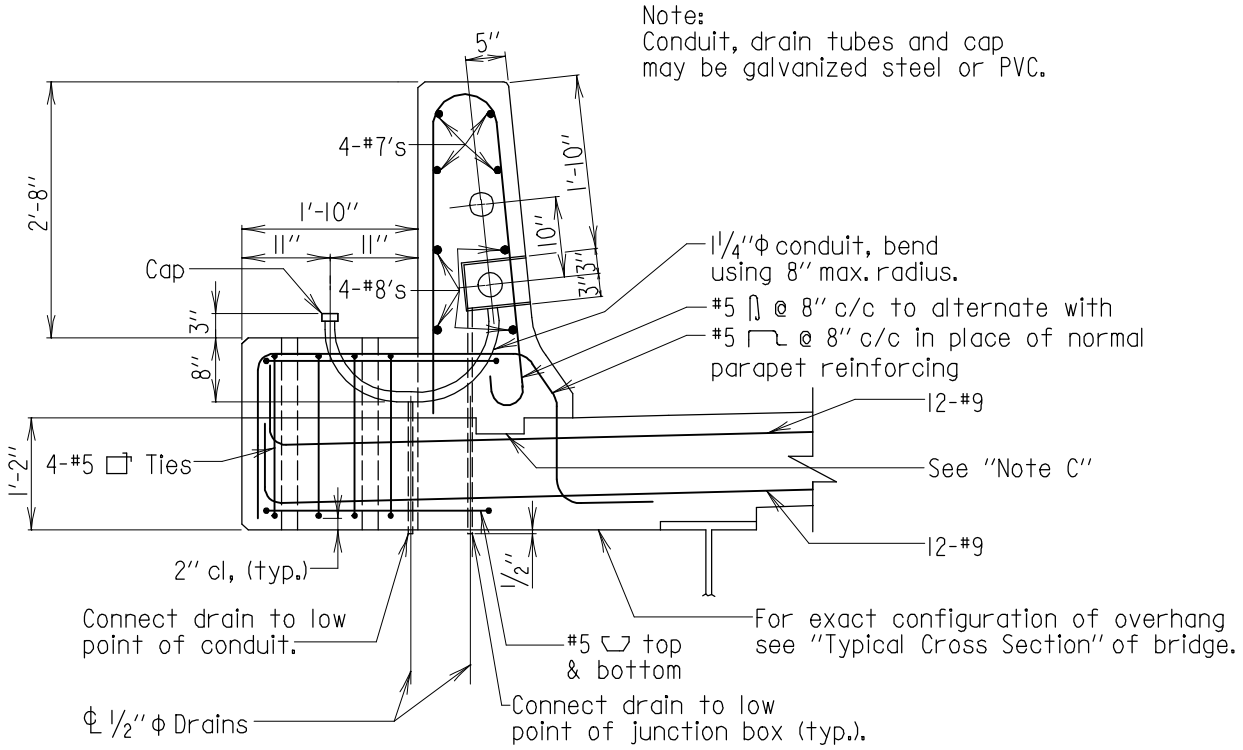

SECTION B-B FOR "F-SHAPE" BARRIER

Scale: ½"=1'-0"

Note:
All #7 and #8 bars shall be placed continuously in the parapet from expansion opening to expansion opening in a simple span bridge and expansion opening to centerline of pier in a multispan bridge. Refer to SUP-TB(42F)-101.

Note C:
The constr. jt. between the F-shape parapet and the deck may vary slightly from the joint indicated. For exact details and location of the joint see "Superstructure" Sheet.

42" STRAIGHT BACK

APPROVAL	
DIRECTOR OFFICE OF STRUCTURES	
DATE: 6/1/05	
REVISIONS	
SHA	FHWA
10-9-07	
FHWA APPROVAL	
DATE:	

STATE OF MARYLAND
DEPARTMENT OF TRANSPORTATION
STATE HIGHWAY ADMINISTRATION
OFFICE OF STRUCTURES

VERIFIED 10-9-2007 LRFD

SUPPORT BRACKET FOR BRIDGE MOUNTED LIGHT POST WITH DUAL CONDUITS AND 42" F-SHAPE PARAPET WITH STRAIGHT BACK

STANDARD NO. SUP-SB(42F)-201 SHEET 2 OF 2

SUPER - SUPPORT BRACKET

OLD NO. BR-SS(6.38)-05-248B(L)

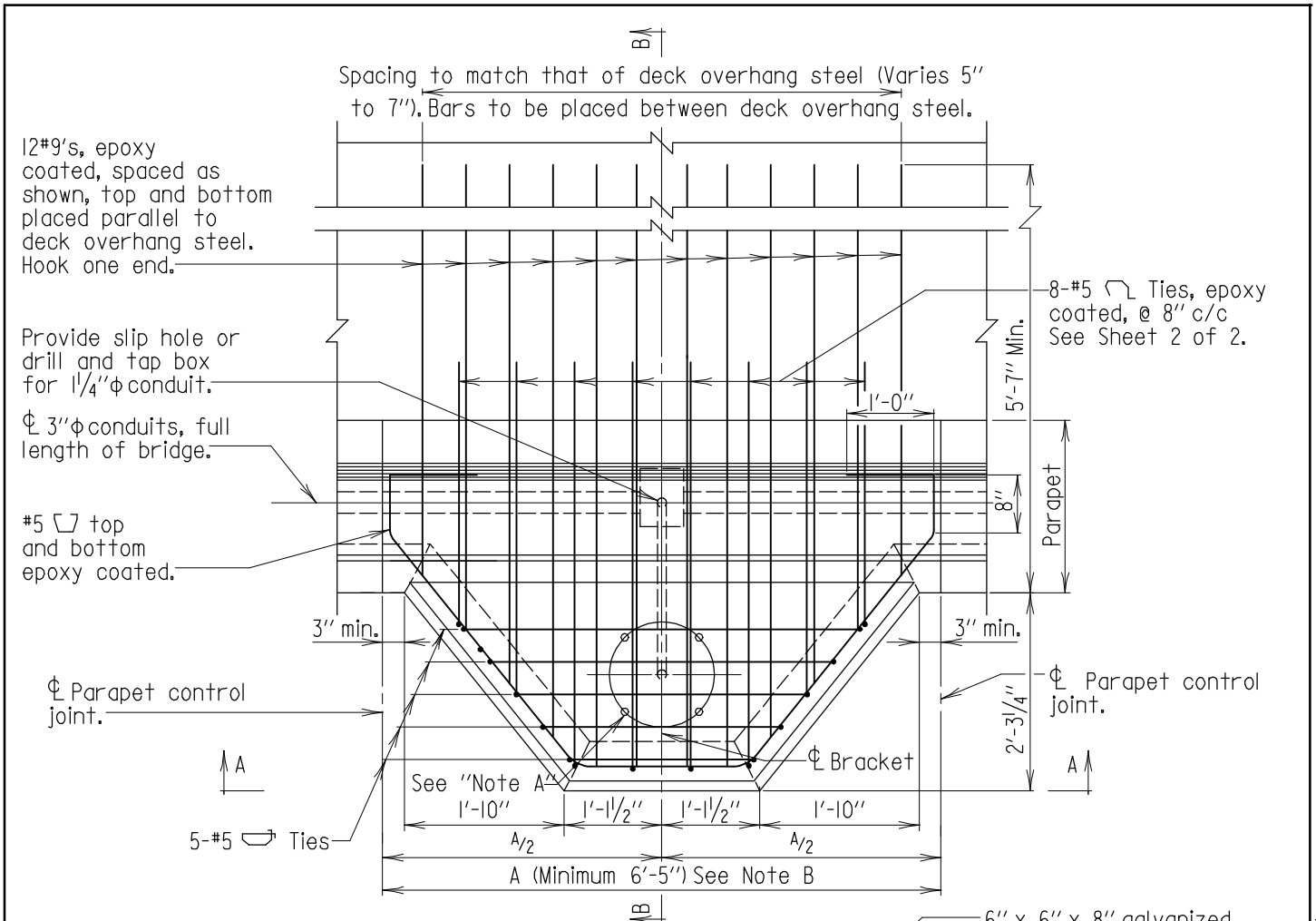

PLAN

Scale: 1/2"=1'-0"

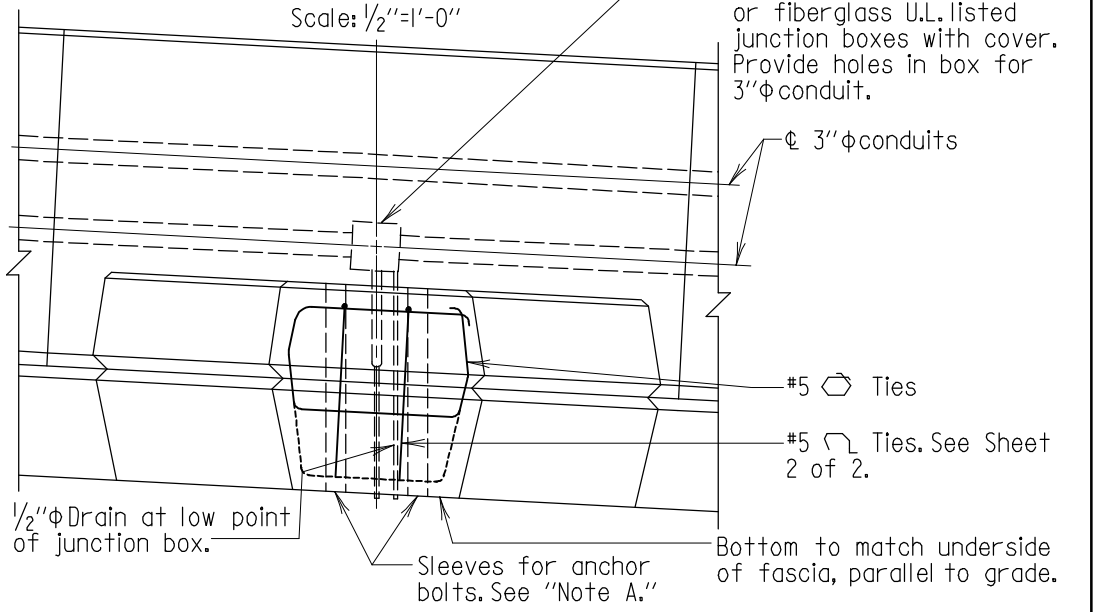

Note B:
Station for light post support bracket shown on Plans is only approximate. ℄ Bracket to be located midway between parapet control joints.
A= Normal parapet contol joint spacing (Adjust as necessary to meet minimum limitations).
If a light post is placed at ℄ of pier, eliminate the control joint at the ℄ of pier, The first control joint beyond, on one side only shall be changed to a paraffin joint.

Note:
Deck overhang reinforcing steel not shown.

Note A:
Contractor is to contact the District Engineer in writing prior to placing sleeves for anchor bolts, to ascertain the bolt circle dimension and size of anchor bolts that will be used on this project. All light poles to be set plumb using leveling nuts on anchor bolts. Max. height of pole for this detail is 40'.

SECTION A-A

Scale: 1/2"=1'-0"

For Section "B-B" see Sheet 2 of 2.

42" DIAMOND BACK

APPROVAL	
E.S. Freedman DIRECTOR OFFICE OF STRUCTURES	
DATE: 6/1/05	
REVISIONS	
SHA	FHWA
10-9-07	
1-9-08	
FHWA APPROVAL	
DATE:	

STATE OF MARYLAND
DEPARTMENT OF TRANSPORTATION
STATE HIGHWAY ADMINISTRATION
OFFICE OF STRUCTURES

VERIFIED 10-9-2007 LRFD

SUPPORT BRACKET FOR BRIDGE MOUNTED LIGHT POST WITH DUAL CONDUITS AND 42" F-SHAPE PARAPET WITH DIAMOND BACK

STANDARD NO. SUP-SB(42F)-202 SHEET 1 OF 2

SUPER - SUPPORT BRACKET

OLD NO. BR-SS(6.40)-05-250B(L)

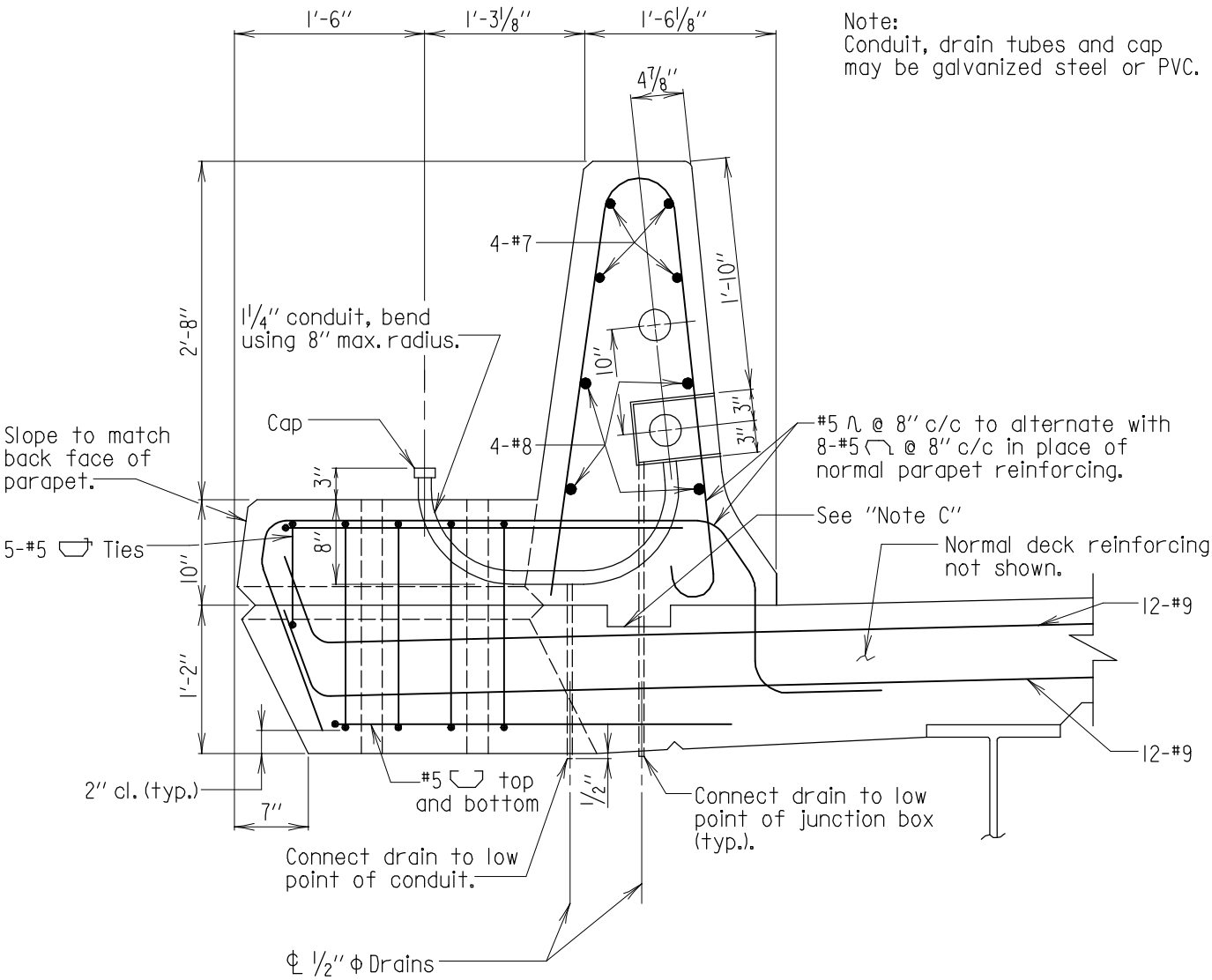

SECTION B-B

Scale: 3/4"=1'-0"

Note:
All #7 and #8 bars shall be placed continuously in the parapet from expansion opening to expansion opening in a simple span bridge and expansion opening to centerline of pier in a multispan bridge. Refer to SUP-TB(42F)-102.

Note C:
The constr. jt. between the F-shape parapet and the deck may vary slightly from the joint indicated. For exact details and location of the joint see "Superstructure" Sheet.

42" DIAMOND BACK

APPROVAL	
E.S. Freedman DIRECTOR OFFICE OF STRUCTURES	
DATE: 6/1/05	
REVISIONS	
SHA	FHWA
10-9-07	
FHWA APPROVAL	
DATE:	

STATE OF MARYLAND
DEPARTMENT OF TRANSPORTATION
STATE HIGHWAY ADMINISTRATION
OFFICE OF STRUCTURES

VERIFIED 10-9-2007 LRFD

SUPPORT BRACKET FOR BRIDGE MOUNTED LIGHT POST WITH DUAL CONDUITS AND 42" F-SHAPE PARAPET WITH DIAMOND BACK

STANDARD NO. SUP-SB(42F)-202 SHEET 2 OF 2

SUPER - SUPPORT BRACKET

OLD NO. BR-SS(6.40)-05-250B(L)

SUPERSTRUCTURE

SUPPORT BRACKETS FOR LIGHT STANDARDS

PARAPET WITH SIDEWALK

(SUP-SB(SW))

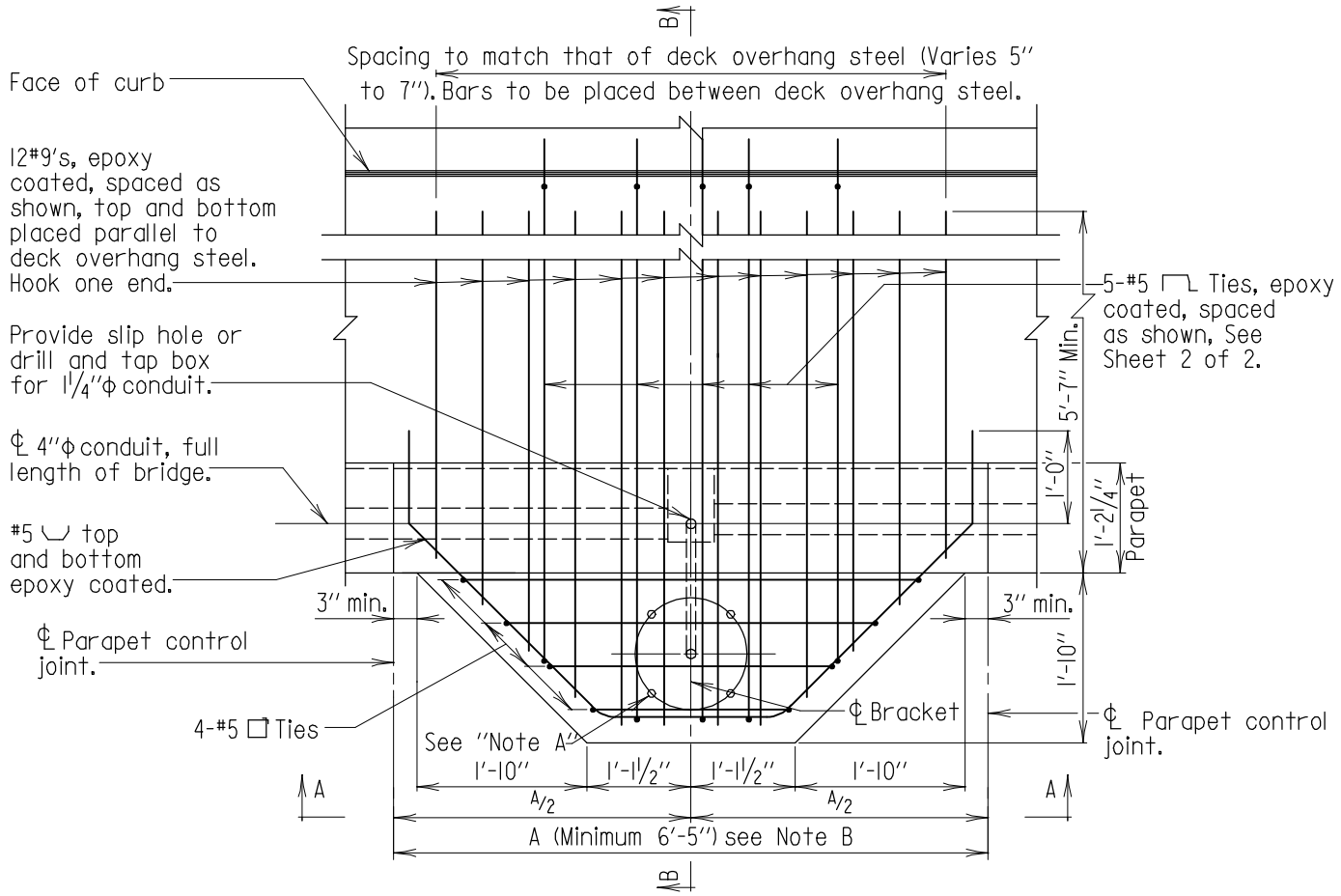

PLAN

Scale: 1/2"=1'-0"

Note B:
Station for light post support bracket shown on Plans is only approximate. ℄ Bracket to be located midway between parapet control joints.
A = Normal parapet control joint spacing (adjust as necessary to meet minimum limitations).
If a light post is placed at ℄ of pier, eliminate the control joint at the ℄ of pier, The first control joint beyond, on one side only shall be changed to a paraffin joint.

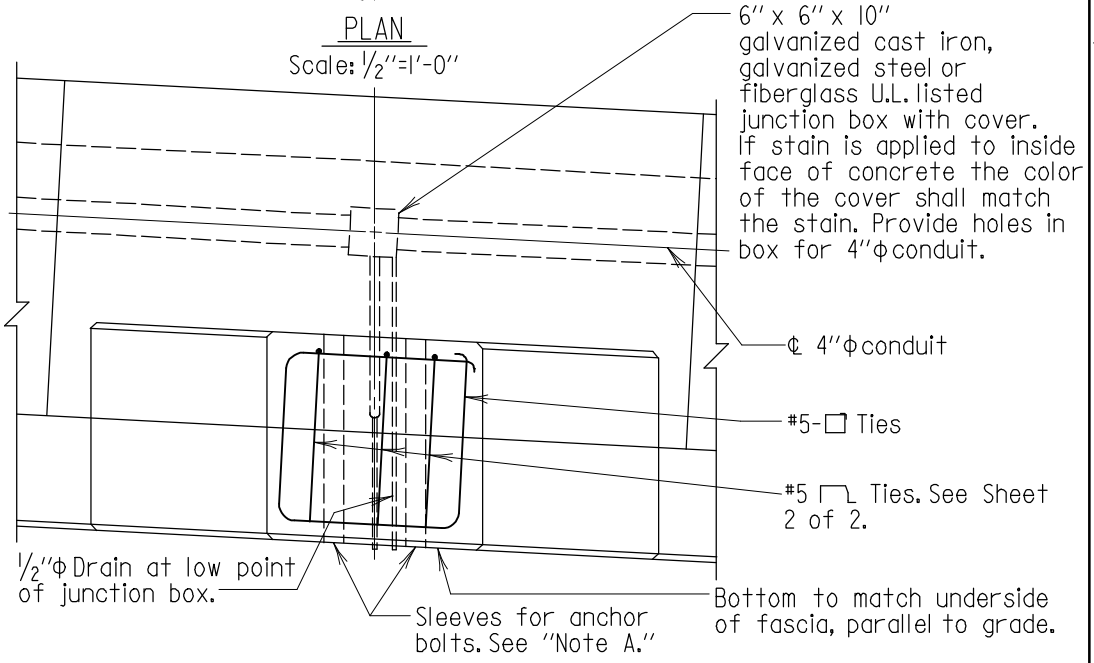

SECTION A-A

Scale: 1/2"=1'-0"

For Section "B-B" see Sheet 2 of 2.

Note:
Deck overhang reinforcing steel not shown.

Note A:
Contractor is to contact the District Engineer in writing prior to placing sleeves for anchor bolts, to ascertain the bolt circle dimension and size of anchor bolts that will be used on this project. All light poles to be set plumb using leveling nuts on anchor bolts. Max. height of pole for this detail is 40'.

SIDEWALK WITH STRAIGHT BACK

APPROVAL		
E.S. Freedman DIRECTOR OFFICE OF STRUCTURES		
DATE: 6/1/05		
REVISIONS		
SHA	FHWA	
10-9-07		
1-9-08		
9-24-13		
12-23-14		
FHWA APPROVAL		
DATE:		

STATE OF MARYLAND
DEPARTMENT OF TRANSPORTATION
STATE HIGHWAY ADMINISTRATION
OFFICE OF STRUCTURES

VERIFIED 10-9-2007 LRFD

SUPPORT BRACKET FOR BRIDGE MOUNTED LIGHT POST WITH SINGLE CONDUIT AND PARAPET WITH STRAIGHT BACK AND SIDEWALK

STANDARD NO. SUP-SB(SW)-101 SHEET 1 OF 2

SUPER - SUPPORT BRACKET

OLD NO. BR-SS(6.51)-05-353(L)

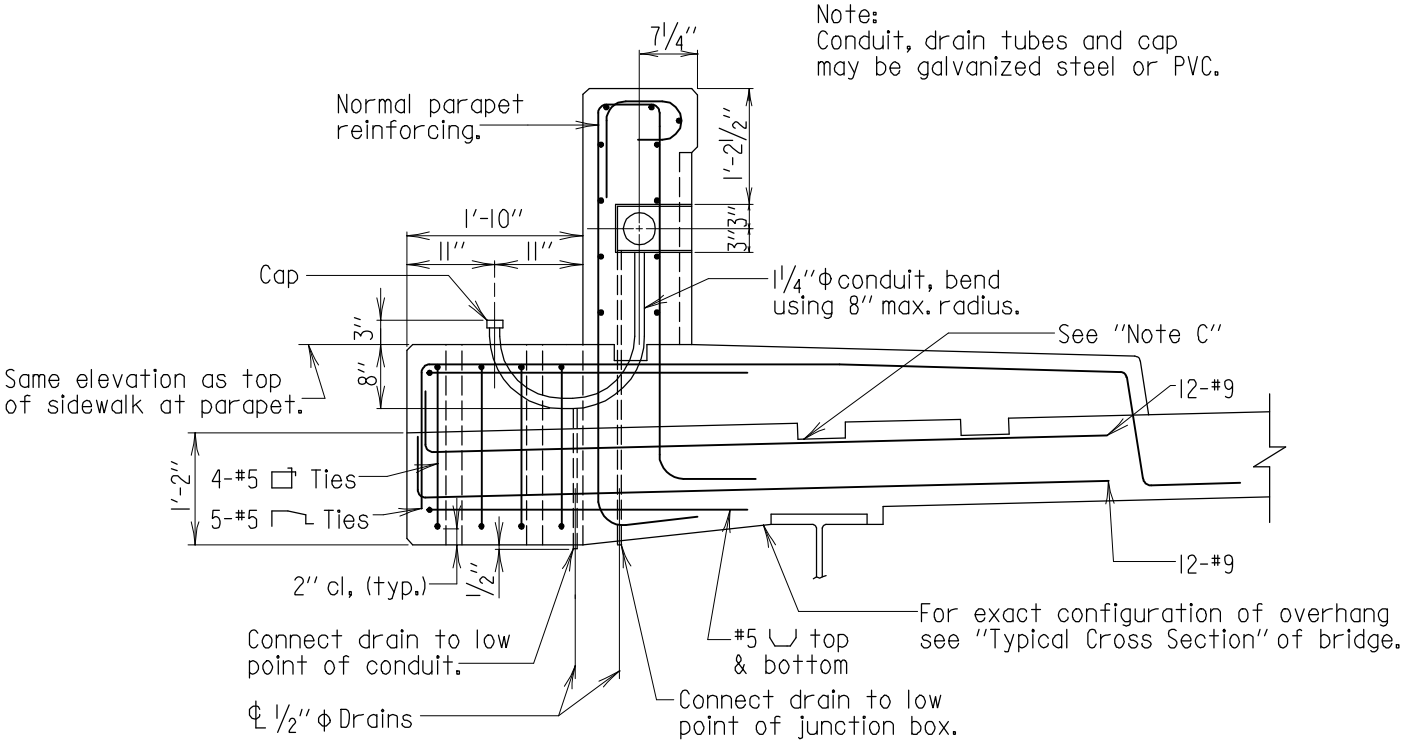

SECTION B-B FOR SIDEWALKS WITH PARAPET

Scale: 1/2"=1'-0"

Note:
All longitudinal bars are #5's and shall be placed continuously in the sidewalk from expansion opening to expansion opening in a simple span bridge and expansion opening to centerline of pier in a multispan bridge. Refer to SUP-TB(SW)-101.

Note C:
The constr. jt. between the sidewalk and the deck may vary slightly from the joint indicated.
For exact details and location of the joint see "Superstructure" Sheet.

SIDEWALK STRAIGHT BACK

APPROVAL	
R.S. Freedman DIRECTOR OFFICE OF STRUCTURES	
DATE: 6/1/05	
REVISIONS	
SHA	FHWA
10-9-07	
9-24-13	
FHWA APPROVAL	
DATE:	

STATE OF MARYLAND
DEPARTMENT OF TRANSPORTATION
STATE HIGHWAY ADMINISTRATION
OFFICE OF STRUCTURES

VERIFIED 10-9-2007 LRFD

SUPPORT BRACKET FOR BRIDGE MOUNTED LIGHT POST WITH SINGLE CONDUIT AND PARAPET WITH STRAIGHT BACK AND SIDEWALK

STANDARD NO. SUP-SB(SW)-101 SHEET 2 OF 2

SUPER - SUPPORT BRACKET

OLD NO. BR-SS(6.51)-05-353(L)

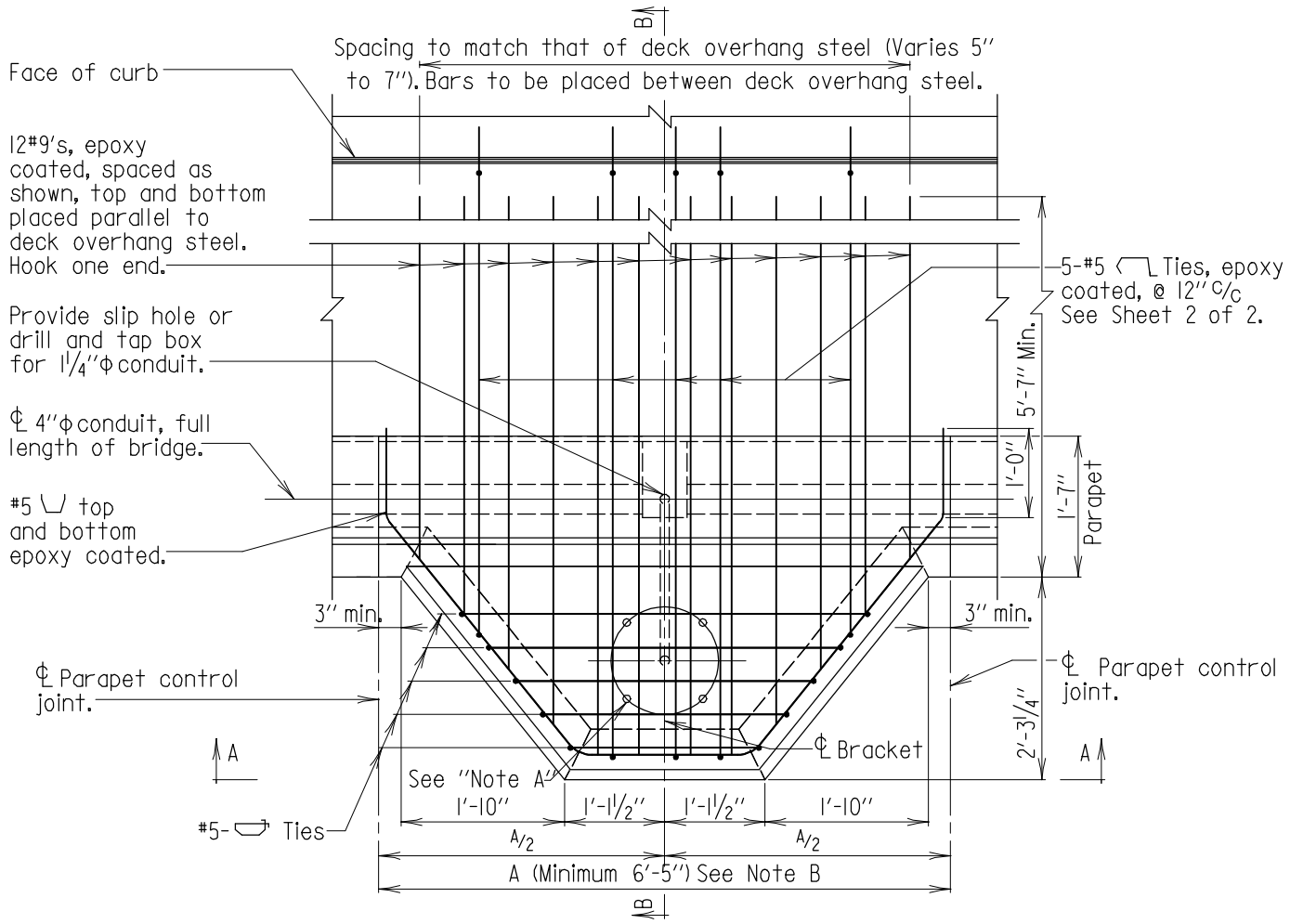

PLAN

Scale: ½"=1'-0"

Note B:
Station for light post support bracket shown on Plans is only approximate. ℄ Bracket to be located midway between parapet control joints.
A= Normal parapet contol joint spacing (Adjust as necessary to meet minimum limitations).
If a light post is placed at ℄ of pier, eliminate the control joint at the ℄ of pier, The first control joint beyond, on one side only shall be changed to a paraffin joint.

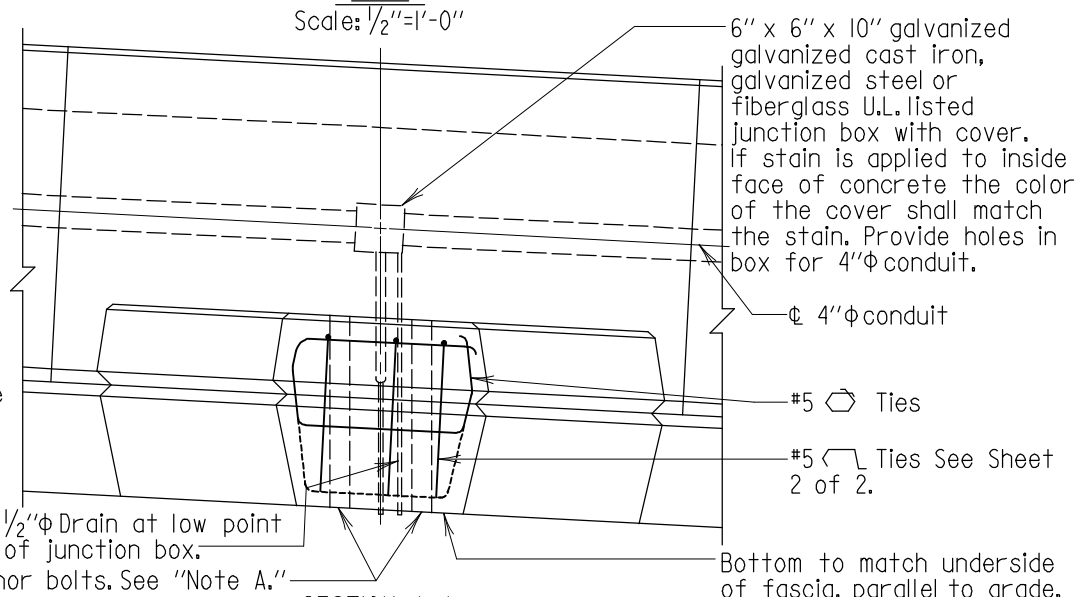

SECTION A-A

Scale: ½"=1'-0"

For Section "B-B" see Sheet 2 of 2.

Note:
Deck overhang reinforcing steel not shown.

Note A:
Contractor is to contact the District Engineer in writing prior to placing sleeves for anchor bolts, to ascertain the bolt circle dimension and size of anchor bolts that will be used on this project. All light poles to be set plumb using leveling nuts on anchor bolts. Max. height of pole for this detail is 40'.

SIDEWALK WITH DIAMOND BACK

APPROVAL	
E.S. Freedman DIRECTOR OFFICE OF STRUCTURES	
DATE: 6/1/05	
REVISIONS	
SHA	FHWA
10-9-07	
1-9-08	
9-24-13	
12-23-14	
FHWA APPROVAL	
DATE:	

STATE OF MARYLAND
DEPARTMENT OF TRANSPORTATION
STATE HIGHWAY ADMINISTRATION
OFFICE OF STRUCTURES

VERIFIED 10-9-2007 LRFD

SUPPORT BRACKET FOR BRIDGE MOUNTED LIGHT POST WITH SINGLE CONDUIT AND PARAPET WITH DIAMOND BACK AND SIDEWALK

STANDARD NO. SUP-SB(SW)-102 SHEET 1 OF 2

SUPER - SUPPORT BRACKET

OLD NO. BR-SS(6.53)-05-355(L)

Note:
Conduit, drain tubes and cap may be galvanized steel or PVC.

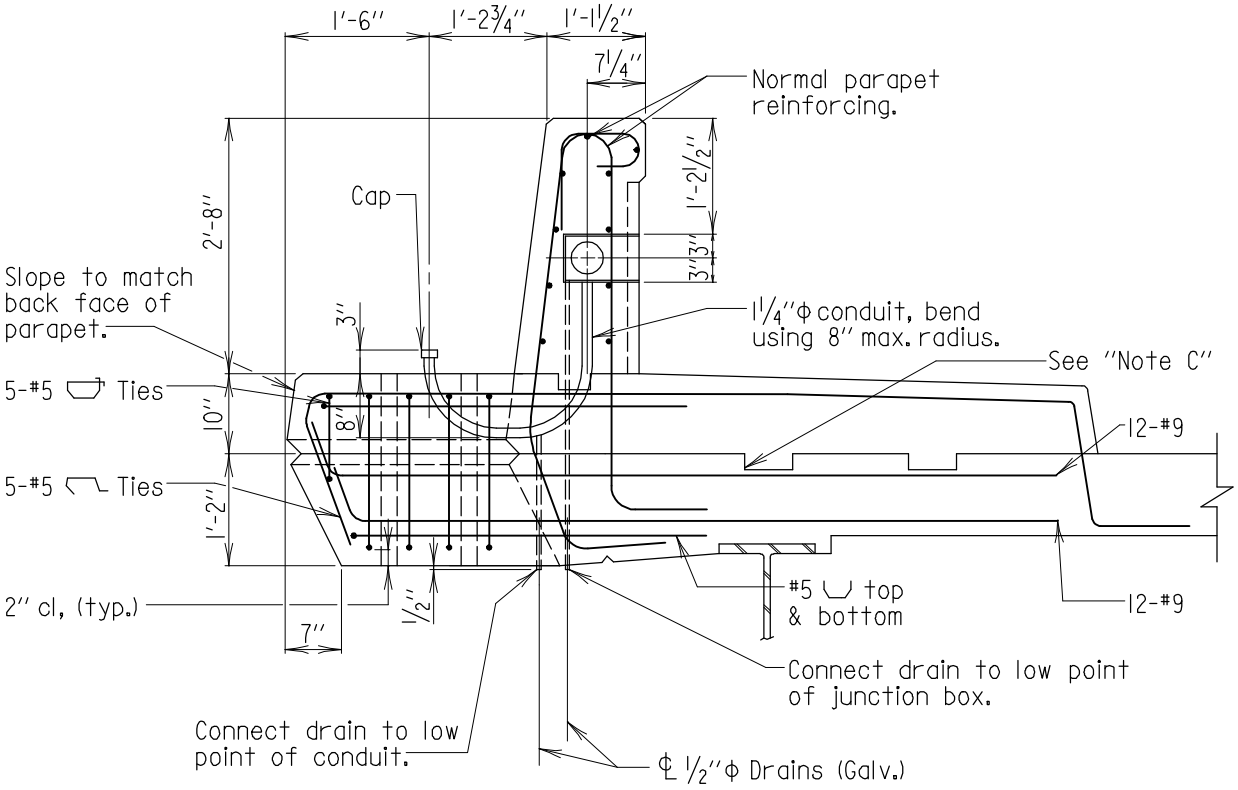

SECTION B-B FOR SIDEWALKS WITH PARAPET

Scale: ½"=1'-0"

Note:
All longitudinal bars are #5's and shall be placed continuously in the sidewalk from expansion opening to expansion opening in a simple span bridge and expansion opening to centerline of pier in a multispan bridge. Refer to SUP-TB(SW)-102.

Note C:
The constr. jt. between the sidewalk and the deck slab may vary slightly from the joint indicated.
For exact details and location of the joint see "Superstructure" Sheet.

SIDEWALK WITH DIAMOND BACK

APPROVAL	
E.S. Freedman DIRECTOR OFFICE OF STRUCTURES	
DATE: 6/1/05	
REVISIONS	
SHA	FHWA
10-9-07	
9-24-13	
12-23-14	
FHWA APPROVAL	
DATE: 3-19-85	

STATE OF MARYLAND
DEPARTMENT OF TRANSPORTATION
STATE HIGHWAY ADMINISTRATION
OFFICE OF STRUCTURES

VERIFIED 10-9-2007 LRFD

SUPPORT BRACKET FOR MOUNTED LIGHT POST WITH SINGLE CONDUIT AND PARAPET WITH DIAMOND BACK AND SIDEWALK

STANDARD NO. SUP-SB(SW)-102 SHEET 2 OF 2

SUPER - SUPPORT BRACKET

OLD NO. BR-SS(6.53)-05-355(L)

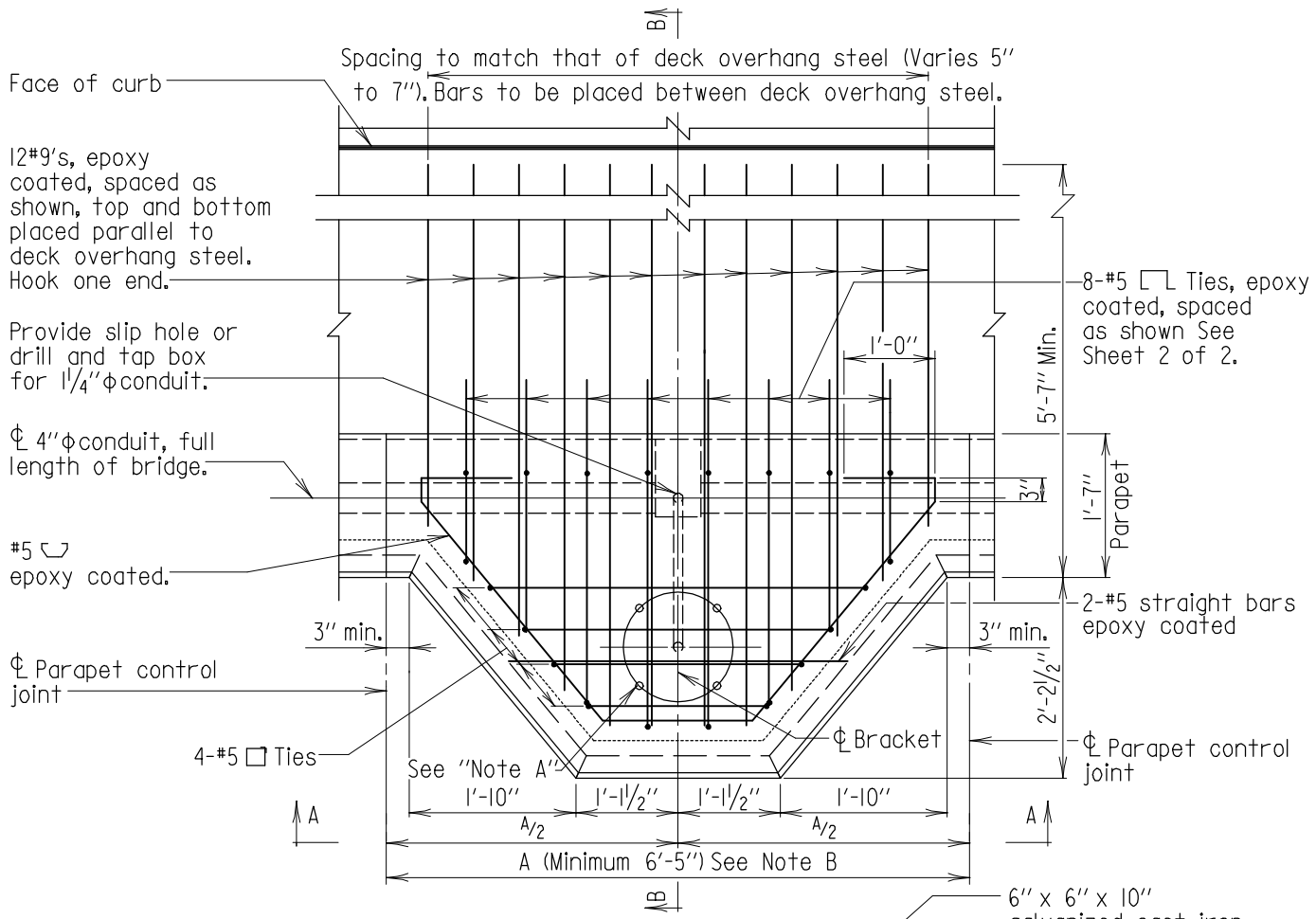

PLAN

Scale: ½"=1'-0"

Note B:
Station for light post support bracket shown on Plans is only approximate. ℄ Bracket to be located midway between parapet control joints.
A = Normal parapet control joint spacing (adjust as necessary to meet minimum limitations).
If a light post is placed at ℄ of pier, eliminate the control joint at the ℄ of pier, The first control joint beyond, on one side only shall be changed to a paraffin joint.

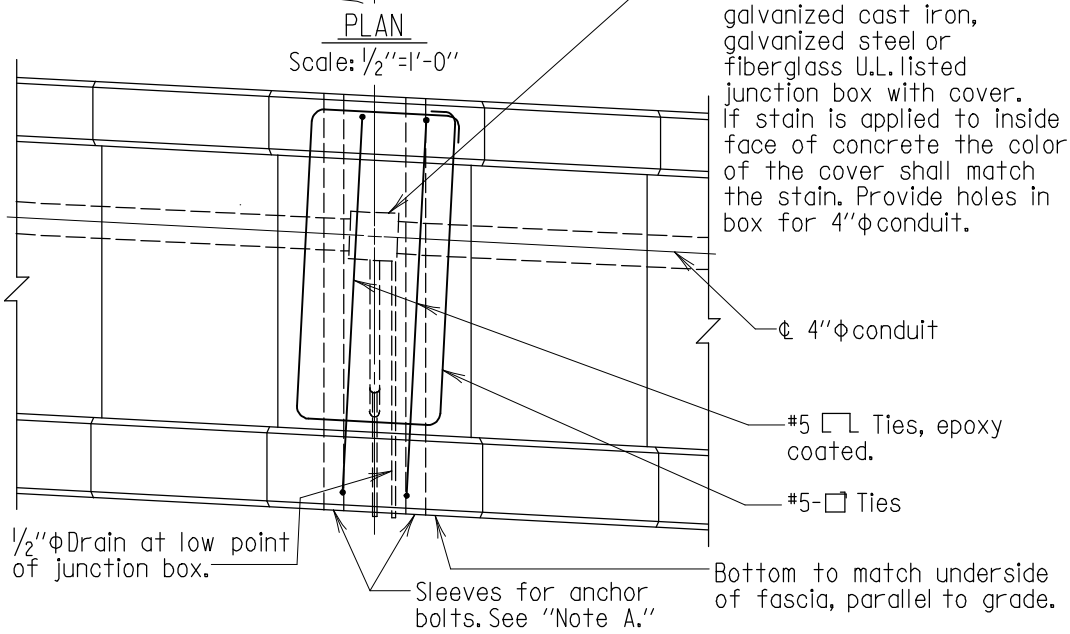

SECTION A-A

Scale: ½"=1'-0"

For Section "B-B" see Sheet 2 of 2.

Note:
Deck overhang reinforcing steel not shown.

Note A:
Contractor is to contact the District Engineer in writing prior to placing sleeves for anchor bolts, to ascertain the bolt circle dimension and size of anchor bolts that will be used on this project. All light poles to be set plumb using leveling nuts on anchor bolts. Max. height of pole for this detail is 40'.

RECESSED BACK WITH SIDEWALK

APPROVAL		
C.S. Freedman DIRECTOR OFFICE OF STRUCTURES		
DATE: 6/1/05		
REVISIONS		
SHA	FHWA	
10-9-07		
1-9-08		
9-24-13		
12-23-14		
FHWA APPROVAL		
DATE:		

STATE OF MARYLAND
DEPARTMENT OF TRANSPORTATION
STATE HIGHWAY ADMINISTRATION
OFFICE OF STRUCTURES

VERIFIED 10-9-2007 LRFD

SUPPORT BRACKET FOR BRIDGE MOUNTED LIGHT POST WITH SINGLE CONDUIT AND PARAPET WITH ARCHITECTURAL FINISH AND SIDEWALK

STANDARD NO. SUP-SB(SW)-103 SHEET 1 OF 2

SUPER - SUPPORT BRACKET

OLD NO. BR-SS(6.55)-05-357(L)

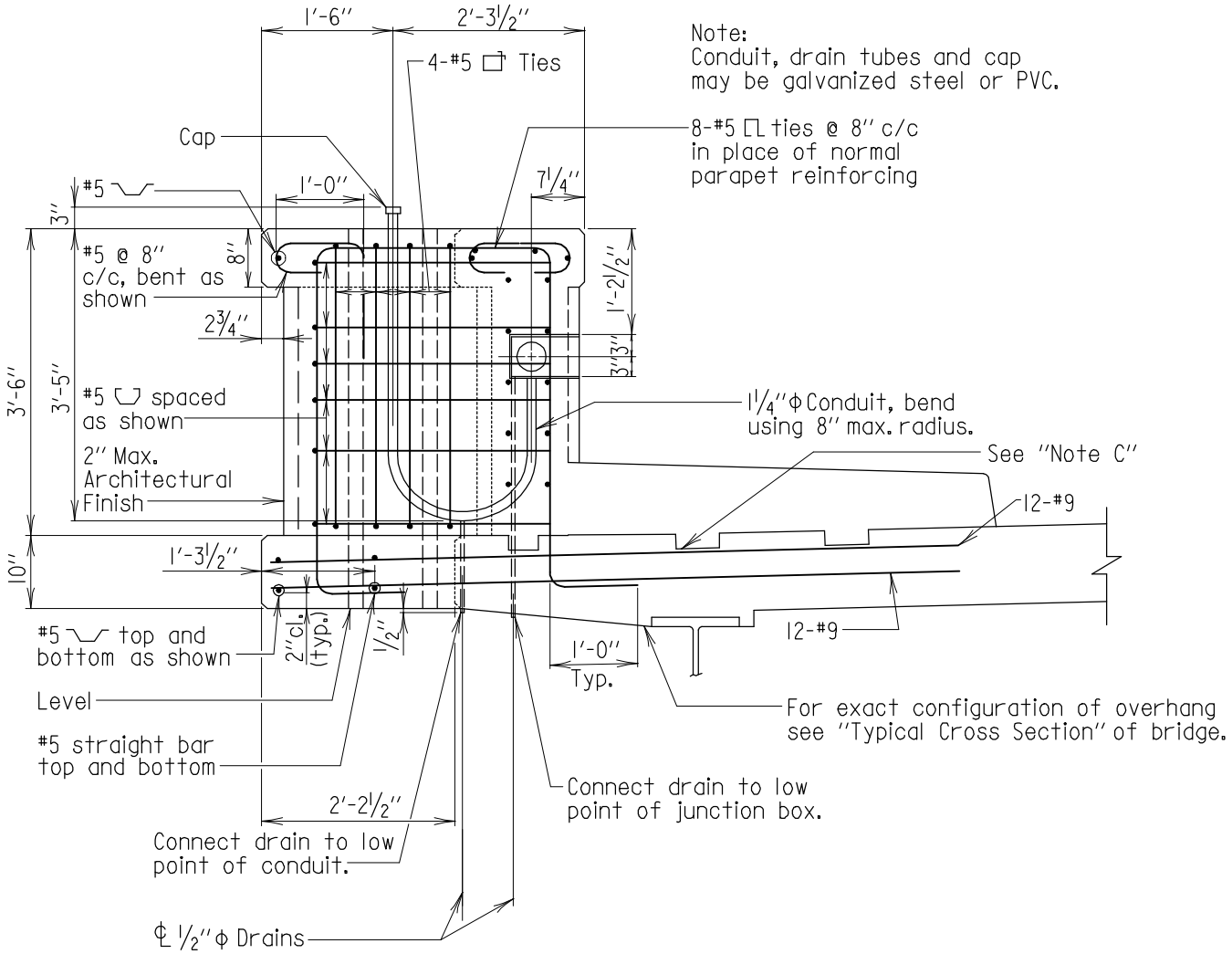

Note:
Conduit, drain tubes and cap may be galvanized steel or PVC.

8-#5 ⊏⊐ ties @ 8" c/c in place of normal parapet reinforcing

SECTION B-B FOR SIDEWALKS WITH PARAPET

Scale: 1/2"=1'-0"

Note:
All longitudinal bars are #5's and shall be placed continuously in the sidewalk from expansion opening to expansion opening in a simple span bridge and expansion opening to centerline of pier in a multispan bridge. Refer to SUP-TB(SW)-103.

Note C:
The constr. jt. between the sidewalk and the deck may vary slightly from the joint indicated.
For exact details and location of the joint see "Superstructure" Sheet.

RECESSED BACK WITH SIDEWALK

APPROVAL	
E.S. Freedman DIRECTOR OFFICE OF STRUCTURES	
DATE: 6/1/05	
REVISIONS	
SHA	FHWA
10-9-07	
9-24-13	
12-23-14	
FHWA APPROVAL	
DATE:	

STATE OF MARYLAND
DEPARTMENT OF TRANSPORTATION
STATE HIGHWAY ADMINISTRATION
OFFICE OF STRUCTURES

VERIFIED 10-9-2007 LRFD

SUPPORT BRACKET FOR BRIDGE MOUNTED LIGHT POST WITH SINGLE CONDUIT AND PARAPET WITH ARCHITECTURAL FINISH AND SIDEWALK

STANDARD NO. SUP-SB(SW)-103 SHEET 2 OF 2

SUPER - SUPPORT BRACKET

OLD NO. BR-SS(6.55)-05-357(L)

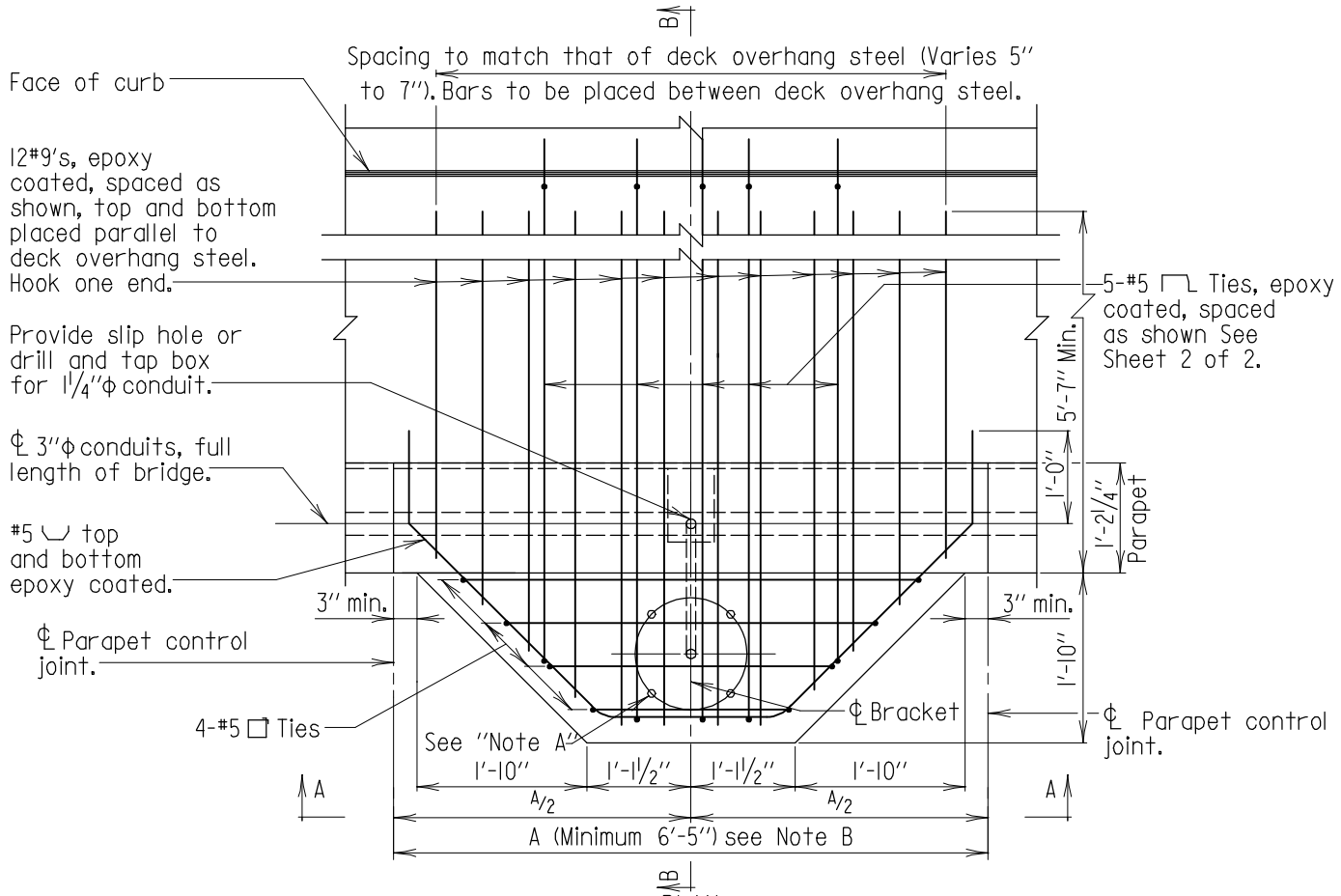

PLAN

Scale: 1/2"=1'-0"

Note B:
Station for light post support bracket shown on Plans is only approximate. ℄ Bracket to be located midway between parapet control joints.
A = Normal parapet control joint spacing (adjust as necessary to meet minimum limitations).
If a light post is placed at ℄ of pier, eliminate the control joint at the ℄ of pier, The first control joint beyond, on one side only shall be changed to a paraffin joint.

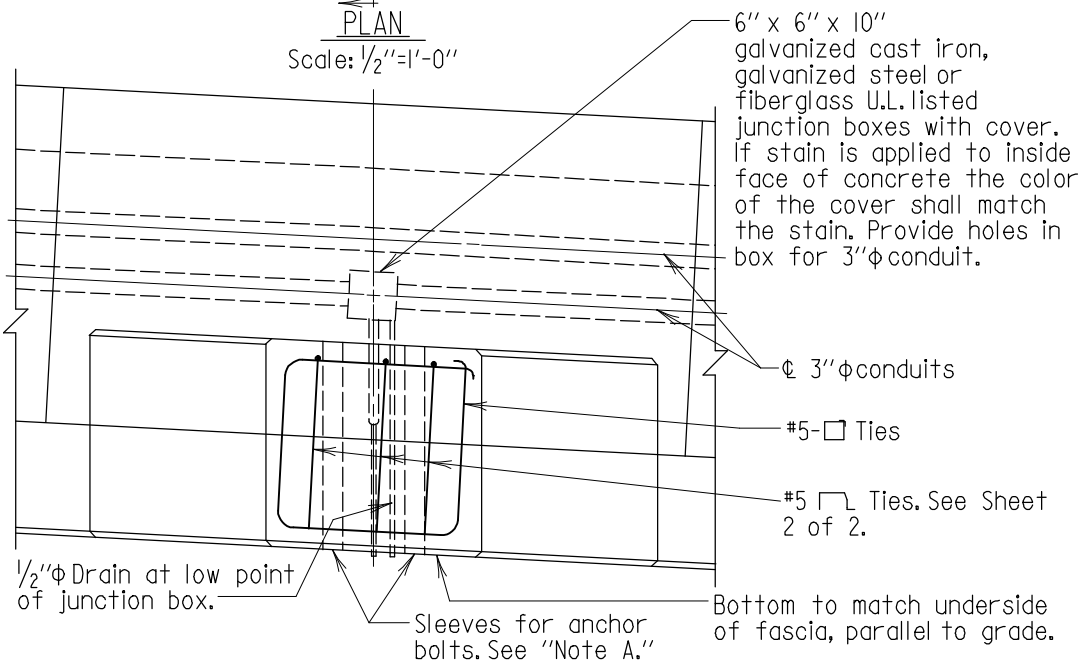

SECTION A-A

Scale: 1/2"=1'-0"

For Section "B-B" see Sheet 2 of 2.

Note:
Deck overhang reinforcing steel not shown.

Note A:
Contractor is to contact the District Engineer in writing prior to placing sleeves for anchor bolts, to ascertain the bolt circle dimension and size of anchor bolts that will be used on this project. All light poles to be set plumb using leveling nuts on anchor bolts. Max. height of pole for this detail is 40'.

SIDEWALK WITH STRAIGHT BACK

APPROVAL		
E.S. Freedman DIRECTOR OFFICE OF STRUCTURES		
DATE: 6/1/05		
REVISIONS		
SHA	FHWA	
10-9-07		
1-9-08		
9-24-13		
12-23-14		

FHWA APPROVAL
DATE:

STATE OF MARYLAND
DEPARTMENT OF TRANSPORTATION
STATE HIGHWAY ADMINISTRATION
OFFICE OF STRUCTURES

VERIFIED 10-9-2007 LRFD

SUPPORT BRACKET FOR BRIDGE MOUNTED LIGHT POST WITH DUAL CONDUITS AND PARAPET WITH STRAIGHT BACK AND SIDEWALK

STANDARD NO. SUP-SB(SW)-201 SHEET 1 OF 2

SUPER - SUPPORT BRACKET

OLD NO. BR-SS(6.52)-05-354(L)

Note:
Conduit, drain tubes and cap may be galvanized steel or PVC.

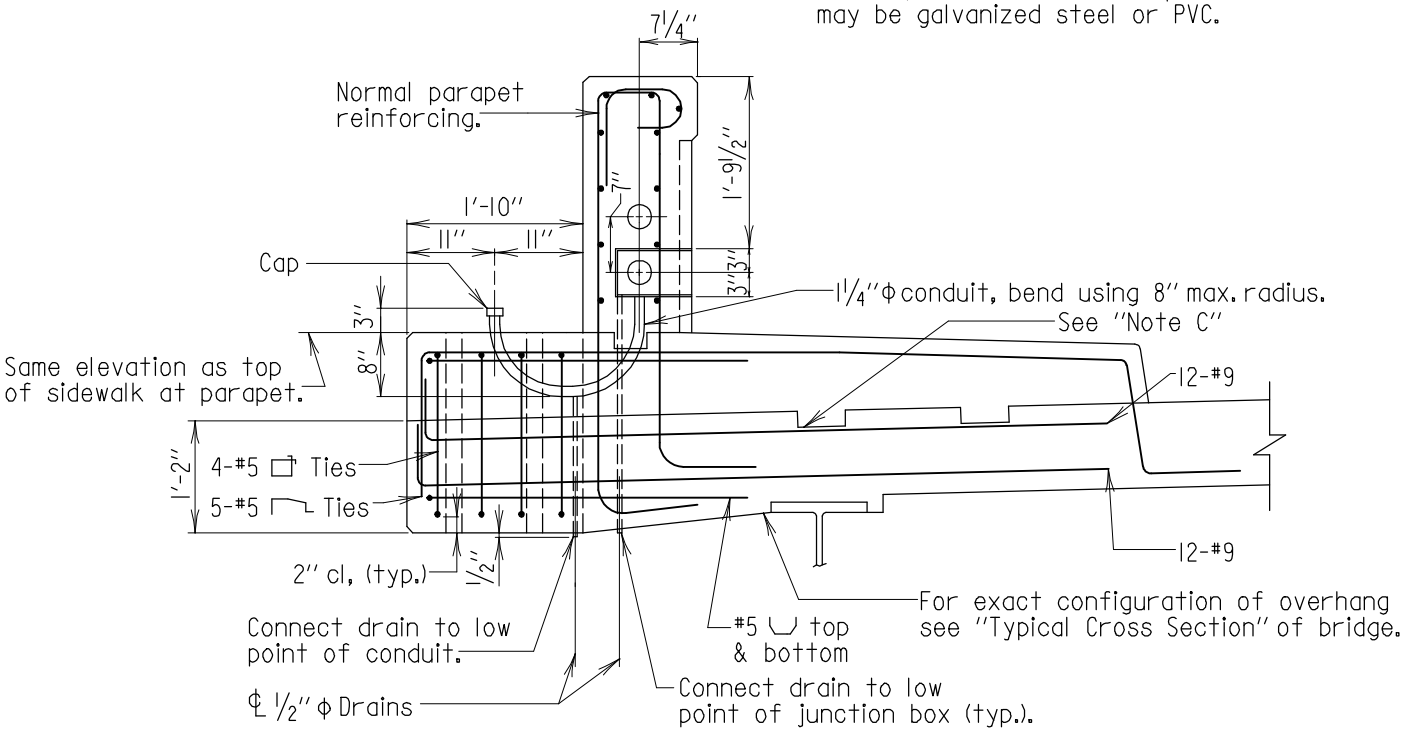

SECTION B-B FOR SIDEWALKS WITH PARAPET

Scale: 1/2"=1'-0"

Note:
All longitudinal bars are #5's and shall be placed continuously in the sidewalk from expansion opening to expansion opening in a simple span bridge and expansion opening to centerline of pier in a multispan bridge. Refer to SUP-TB(SW)-101.

Note C:
The constr. jt. between the sidewalk and the deck may vary slightly from the joint indicated.
For exact details and location of the joint see "Superstructure" Sheet.

SIDEWALK WITH STRAIGHT BACK

APPROVAL	
E.S. Freedman DIRECTOR OFFICE OF STRUCTURES DATE: 6/1/05	
REVISIONS	
SHA	FHWA
10-9-07	
9-24-13	
12-23-14	
FHWA APPROVAL	
DATE:	

STATE OF MARYLAND
DEPARTMENT OF TRANSPORTATION
STATE HIGHWAY ADMINISTRATION
OFFICE OF STRUCTURES

VERIFIED 10-9-2007 LRFD

SUPPORT BRACKET FOR BRIDGE MOUNTED LIGHT POST WITH DUAL CONDUITS AND PARAPET WITH STRAIGHT BACK AND SIDEWALK

STANDARD NO. SUP-SB(SW)-201 SHEET 2 OF 2

SUPER - SUPPORT BRACKET

OLD NO. BR-SS(6.52)-05-354(L)

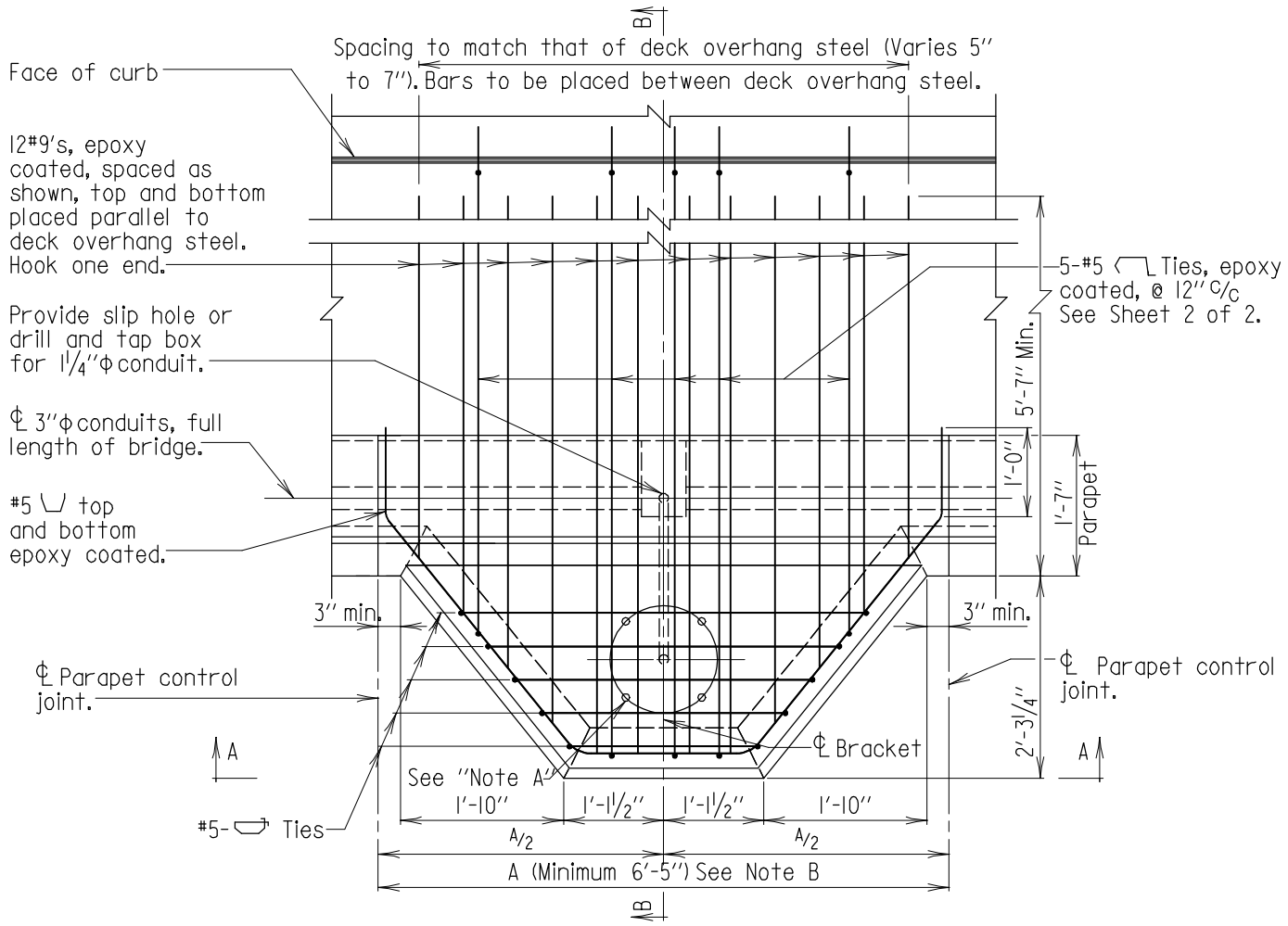

PLAN

Scale: ½"=1'-0"

Note B:
Station for light post support bracket shown on Plans is only approximate. ℄ Bracket to be located midway between parapet control joints.
A= Normal parapet contol joint spacing (Adjust as necessary to meet minimum limitations).
If a light post is placed at ℄ of pier, eliminate the control joint at the L of pier, The first control joint beyond, on one side only shall be changed to a paraffin joint.

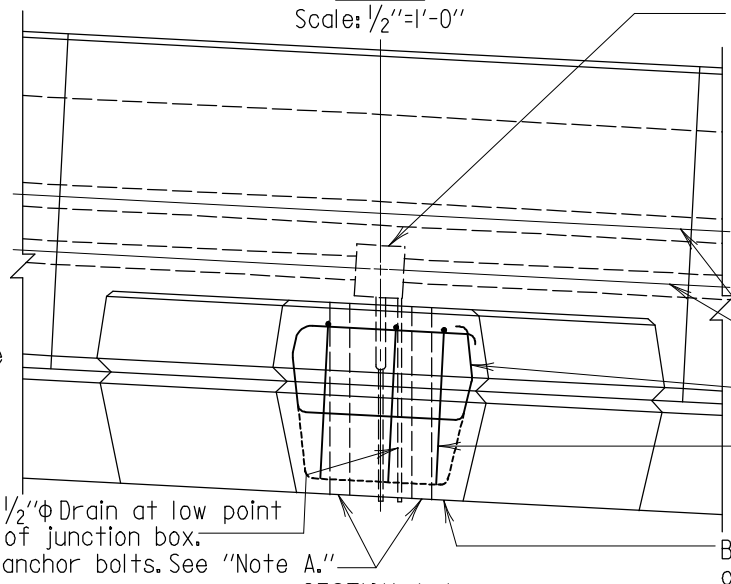

SECTION A-A

Scale: ½"=1'-0"

For Section "B-B" see Sheet 2 of 2.

Note:
Deck overhang reinforcing steel not shown.

Note A:
Contractor is to contact the District Engineer in writing prior to placing sleeves for anchor bolts, to ascertain the bolt circle dimension and size of anchor bolts that will be used on this project. All light poles to be set plumb using leveling nuts on anchor bolts. Max. height of pole for this detail is 40'.

SIDEWALK WITH DIAMOND BACK

APPROVAL	
E.S. Freedman DIRECTOR OFFICE OF STRUCTURES	
DATE: 6/1/05	
REVISIONS	
SHA	FHWA
10-9-07	
1-9-08	
9-24-13	
12-23-14	
FHWA APPROVAL	
DATE:	

STATE OF MARYLAND
DEPARTMENT OF TRANSPORTATION
STATE HIGHWAY ADMINISTRATION
OFFICE OF STRUCTURES

VERIFIED 10-9-2007 LRFD

SUPPORT BRACKET FOR BRIDGE MOUNTED LIGHT POST WITH DUAL CONDUITS AND PARAPET WITH DIAMOND BACK AND SIDEWALK

STANDARD NO. SUP-SB(SW)-202 SHEET 1 OF 2

SUPER - SUPPORT BRACKET

OLD NO. BR-SS(6.54)-05-356(L)

Note:
Conduit, drain tubes and cap may be galvanized steel or PVC.

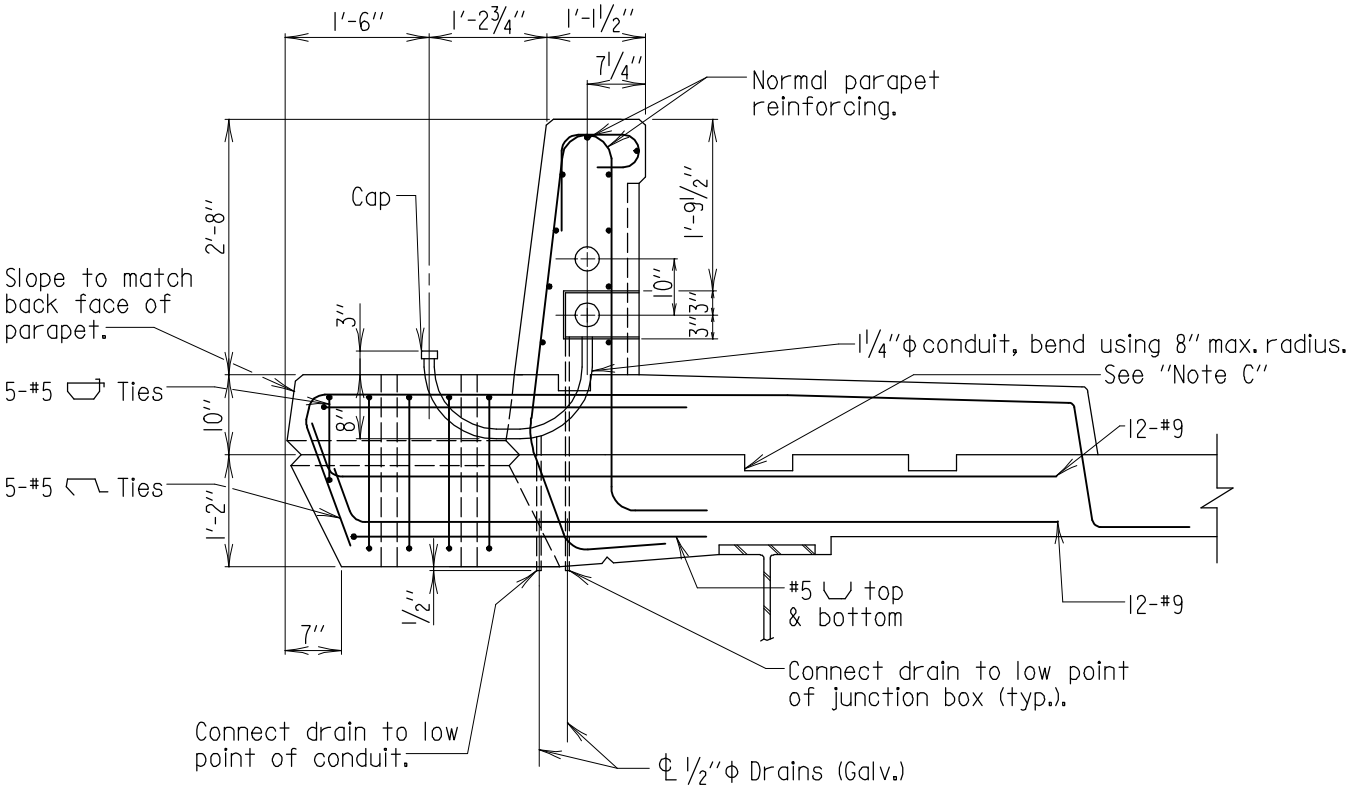

SECTION B-B FOR SIDEWALKS WITH PARAPET

Scale: ½"=1'-0"

Note:
All longitudinal bars are #5's and shall be placed continuously in the sidewalk from expansion opening to expansion opening in a simple span bridge and expansion opening to centerline of pier in a multispan bridge. Refer to SUP-TB(SW)-102.

Note C:
The constr. jt. between the sidewalk and the deck slab may vary slightly from the joint indicated.
For exact details and location of the joint see "Superstructure" Sheet.

SIDEWALK WITH DIAMOND BACK

APPROVAL	
E.S. Freedman DIRECTOR OFFICE OF STRUCTURES	
DATE: 6/1/05	
REVISIONS	
SHA	FHWA
10-9-07	
9-24-13	
12-23-14	
FHWA APPROVAL	
DATE:	

STATE OF MARYLAND
DEPARTMENT OF TRANSPORTATION
STATE HIGHWAY ADMINISTRATION
OFFICE OF STRUCTURES

VERIFIED 10-9-2007 LRFD

SUPPORT BRACKET FOR MOUNTED LIGHT POST WITH DUAL CONDUITS AND PARAPET WITH DIAMOND BACK AND SIDEWALK

STANDARD NO. SUP-SB(SW)-202 SHEET 2 OF 2

SUPER - SUPPORT BRACKET

OLD NO. BR-SS(6.54)-05-356(L)

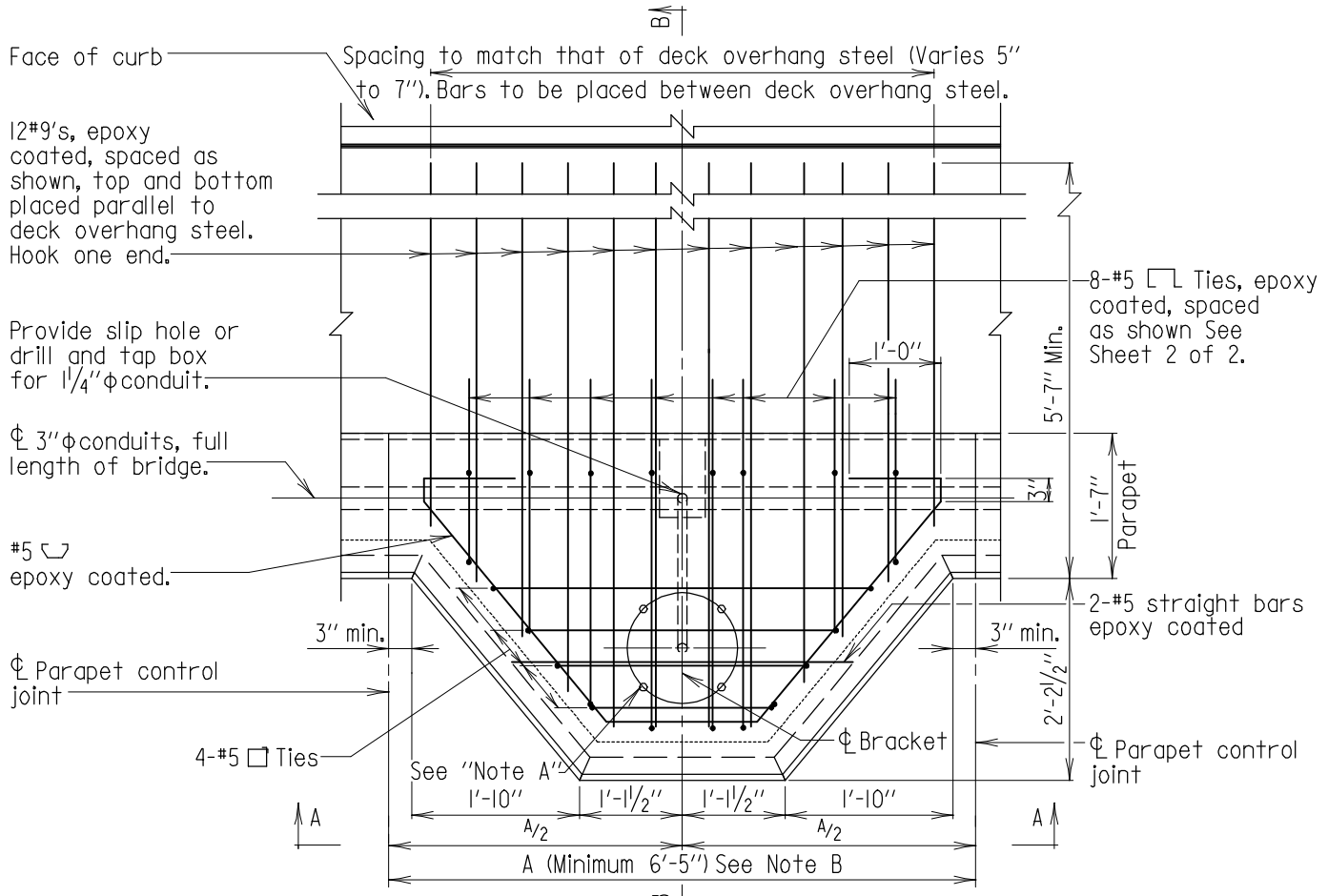

PLAN

Scale: ½"=1'-0"

Note B:
Station for light post support bracket shown on Plans is only approximate. ℄ Bracket to be located midway between parapet control joints.
A = Normal parapet control joint spacing (adjust as necessary to meet minimum limitations).
If a light post is placed at ℄ of pier, eliminate the control joint at the ℄ of pier, The first control joint beyond, on one side only shall be changed to a paraffin joint.

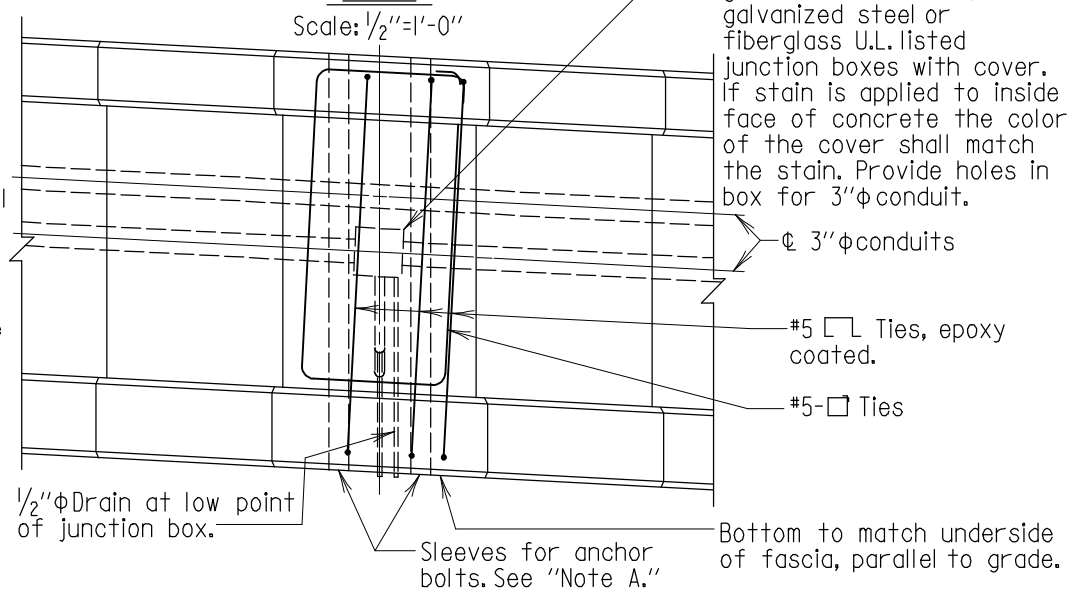

SECTION A-A

Scale: ½"=1'-0"

For Section "B-B" see Sheet 2 of 2.

Note:
Deck overhang reinforcing steel not shown.

Note A:
Contractor is to contact the District Engineer in writing prior to placing sleeves for anchor bolts, to ascertain the bolt circle dimension and size of anchor bolts that will be used on this project. All light poles to be set plumb using leveling nuts on anchor bolts. Max. height of pole for this detail is 40'.

RECESSED BACK WITH SIDEWALK

APPROVAL	
E.S. Freedman DIRECTOR OFFICE OF STRUCTURES	
DATE: 6/1/05	
REVISIONS	
SHA	FHWA
10-9-07	
1-9-08	
9-24-13	
12-23-14	
FHWA APPROVAL	
DATE:	

STATE OF MARYLAND
DEPARTMENT OF TRANSPORTATION
STATE HIGHWAY ADMINISTRATION
OFFICE OF STRUCTURES

VERIFIED 10-9-2007 LRFD

SUPPORT BRACKET FOR BRIDGE MOUNTED LIGHT POST WITH DUAL CONDUITS AND PARAPET WITH ARCHITECTURAL FINISH AND SIDEWALK

STANDARD NO. SUP-SB(SW)-203 SHEET 1 OF 2

SUPER - SUPPORT BRACKET

OLD NO. BR-SS(6.57)-05-359(L)

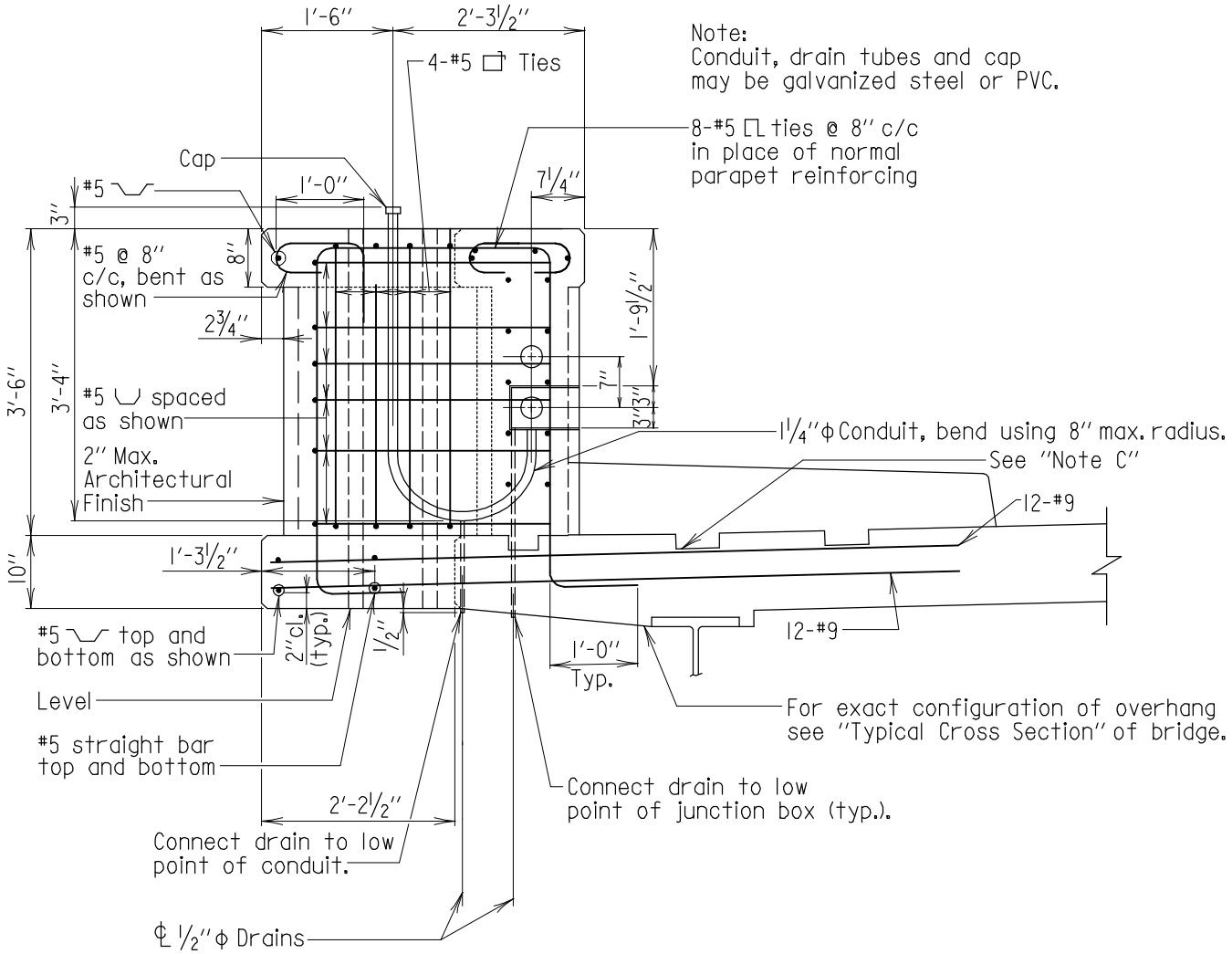

SECTION B-B FOR SIDEWALKS WITH PARAPET

Scale: 1/2"=1'-0"

Note:
All longitudinal bars are #5's and shall be placed continuously in the sidewalk from expansion opening to expansion opening in a simple span bridge and expansion opening to centerline of pier in a multispan bridge. Refer to SUP-TB(SW)-103.

Note C:
The constr. jt. between the sidewalk and the deck may vary slightly from the joint indicated.
For exact details and location of the joint see "Superstructure" Sheet.

RECESSED BACK WITH SIDEWALK

APPROVAL	
E.S. Freedman DIRECTOR OFFICE OF STRUCTURES	
DATE: 6/1/05	
REVISIONS	
SHA	FHWA
10-9-07	
9-24-13	
12-23-14	
FHWA APPROVAL	
DATE:	

STATE OF MARYLAND
DEPARTMENT OF TRANSPORTATION
STATE HIGHWAY ADMINISTRATION
OFFICE OF STRUCTURES

VERIFIED 10-9-2007 LRFD

SUPPORT BRACKET FOR BRIDGE MOUNTED LIGHT POST WITH DUAL CONDUITS AND PARAPET WITH ARCHITECTURAL FINISH AND SIDEWALK

STANDARD NO. SUP-SB(SW)-203 SHEET 2 OF 2

SUPER - SUPPORT BRACKET

OLD NO. BR-SS(6.57)-05-359(L)

SUPERSTRUCTURE

FENCE AND RAILING

(SUP-FR)

SUPERSTRUCTURE

FENCE AND RAILING

FENCING

(SUP-FR(FN))

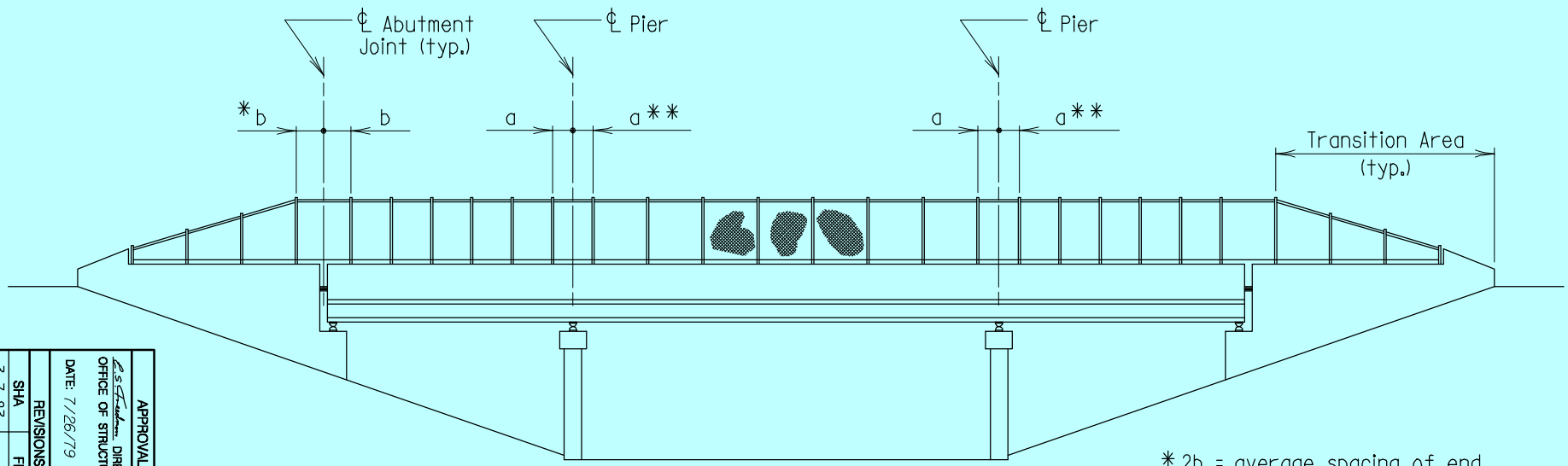

ELEVATION - FENCING

Scale: None

* 2b = average spacing of end post and adjacent span, with exceptions as noted on Sheet 2.

** 2a = average spacing of flanking spans.

FENCE SPACING ON BRIDGES

- All spacings shall be equal in each span, and on each transition area of each end post.
- Fence post spacing should range from 6'-0" min. to 8'-0" max. except as modified in the transition area described on Sheet 2. Effort should be made to make spacing of posts for all spans nearly equal as possible.
- Transition areas shall be provided on both ends of the bridge comprised of a tapered concrete lug and three fence panels, all equally spaced as shown on Sheet 2 of 2.
- Fence shall be continuous across all supports.
- This layout applies to 34" F-shape parapets, 42" F-shape parapets, and parapets with sidewalks.

* GUIDE SHEET FOR PLAN DEVELOPMENT ONLY - DO NOT INCLUDE THIS SHEET IN CONTRACT PLANS *

FHWA APPROVAL
DATE: 12-19-79

APPROVAL
DIRECTOR OFFICE OF STRUCTURES
DATE: 7/26/79

REVISIONS	
SHA	3-7-83
FHWA	3-15-83
	6-1-05

STATE OF MARYLAND
DEPARTMENT OF TRANSPORTATION
STATE HIGHWAY ADMINISTRATION
OFFICE OF STRUCTURES

LAYOUT OF FENCING ON BRIDGES

STANDARD NO. SUP-FR(FN)-101

SHEET 1 OF 2

* FOR OFFICE USE ONLY *

OLD NO. BR-SS(3.06)-03-78

SUPER FENCE/RAILING.

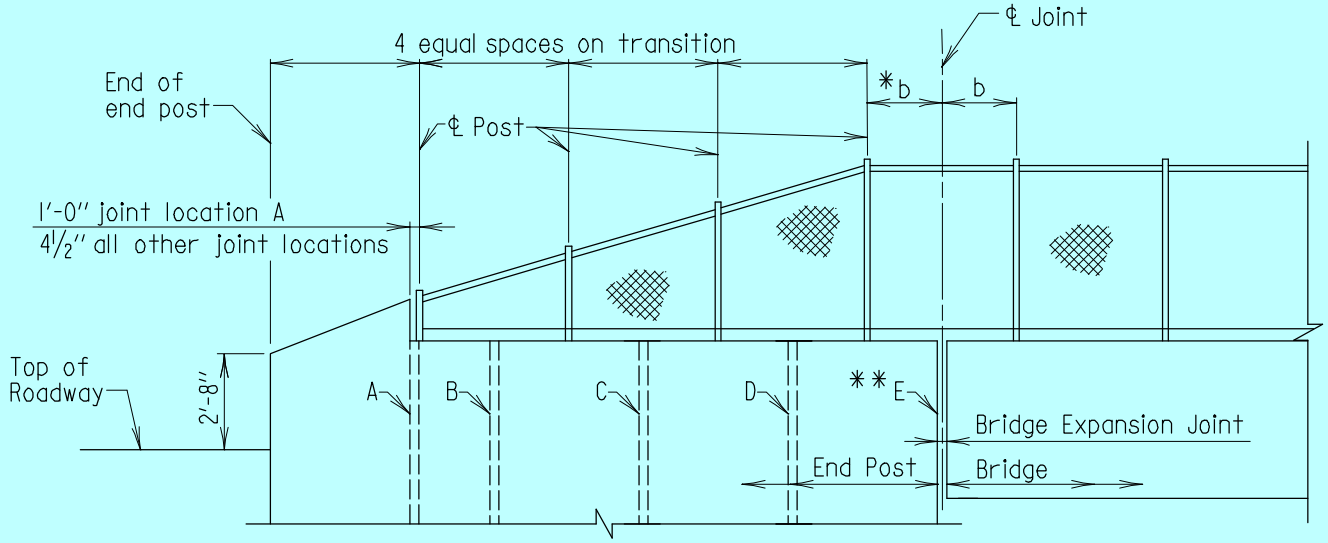

* 2b = average spacing of end post and adjacent span, with exceptions stated in Note 4.

ELEVATION - END POST TRANSITION AREA

Scale: None

Notes:

1. Transition areas should be provided on both ends of the bridge, comprised of a tapered concrete lug and three tapered fence panels, all equally spaced.
2. The end of the concrete lug on both the approach and trail end shall be 2'-8".
3. The End Post Transition Area shall always begin at the end of the end post and be laid out in accordance with the following chart.
4. When roadway joint falls in the middle of a tapered panel (Joint Locations B, C, and D) the first full height panel on the bridge shall be the average spacing of the panels in the transition area and the adjacent span.

END POST TRANSITION AREA

Roadway Joint Location	End Post Length	Fence Transition Panels on End Post	Fence Transition Panels on Bridge
A	L ≤ 8'-0"	0	3
B	8'-0" < L ≤ 12'-0"	½	2½
C	12'-0" < L ≤ 20'-0"	1½	1½
D	20'-0" < L ≤ 28'-0"	2½	½
**E	28'-0" < L	3 + (n + ½) full height panels	0

** Location of Bridge Expansion Joint E varies depending on the number of full height panels on the endpost.

n = the number of full height panels on the end post

* FOR OFFICE USE ONLY *

APPROVAL	
R.S. Freedman DIRECTOR OFFICE OF STRUCTURES DATE: 6/1/05	
REVISIONS	
SHA	FHWA

FHWA APPROVAL
DATE:

STATE OF MARYLAND
DEPARTMENT OF TRANSPORTATION
STATE HIGHWAY ADMINISTRATION
OFFICE OF STRUCTURES

LAYOUT OF FENCING ON BRIDGES

STANDARD NO. SUP-FR(FN)-101 SHEET 2 OF 2

SUPER FENCE/RAILING

OLD NO. BR-SS(3.06)-03-78

GENERAL NOTES

Specifications: Latest SHA Specifications and Special Provisions for materials and construction. Latest AASHTO LRFD Bridge Design Specifications.

Materials: Posts and rails shall conform to ASTM F-1083, Schedule 80. Fabric shall be 6 gauge, 2" PVC coated mesh conforming to 914.01.

All posts, braces, fittings and hardware shall be PVC coated. Coating shall conform to 914.03 except that nuts, bolts and washers shall also be PVC coated and touched up after installation.

All plates shall be steel conforming to ASTM A 709 Grade 36.

Anchor studs or anchor bolts shall conform to ASTM A 276, Type 430 or Type 304 stainless steel annealed, hot-finished, ultimate strength 70 000 psi min., 20% min. elongation. Threads may be rolled or cut.

Epoxy grout for anchor studs in cored holes shall conform to 902.11 (d).

PVC color for all elements of fence shall be black unless otherwise noted.

Construction: All longitudinal rails shall be parallel to top of parapet.

All posts shall be set normal to top of parapet for roadway grades 6% or less. For grades over 6% posts shall be set plumb.

The chain link fence shall be true to line, taut, tight fit to top of parapet, with 1/2" min. to 1" max. gap, and shall comply with the best practice for fence construction of this type.

Post and rails shall be permanently positioned before fabric is placed.

For post spacing see pertinent structure sheets.

Precoated longitudinal rails, if cut, shall have the cut end coated with PVC touch up material supplied by the manufacturer prior to erection.

If Contractor elects to place anchor studs after placing concrete parapet, newly placed rebars shall be located so that coring does not damage same, all holes shall be cored (not drilled) and the diameter of the cored holes for the anchor studs shall be 7/8".

Measurement and Payment: The furnishing, fabricating, erecting, etc., of all new chain link fence on the bridges, complete in place, will not be measured for payment but all costs thereof shall be included in the Contract lump sum prices for the pertinent Chain Link Safety Fence For Bridge items.

The furnishing, fabricating, erecting, etc., of all new chain link fence anti-climb shields, complete in place, will be measured and paid for at the Contract unit prices per each for the pertinent Chain Link Safety Fence Anti-Climb Shield items.

Any defects uncovered by the inspection of welds on base plates and poles shall be repaired or replaced by new members at no additional cost to the Administration.

APPROVAL		
E.S. Freedman DIRECTOR OFFICE OF STRUCTURES DATE: 6/3/76		
REVISIONS		
SHA	FHWA	
11-17-97		
3-13-01		
7-24-01		
10-9-07		

FHWA APPROVAL	
DATE: 11-9-76	

STATE OF MARYLAND
DEPARTMENT OF TRANSPORTATION
STATE HIGHWAY ADMINISTRATION
OFFICE OF STRUCTURES

VERIFIED 10-9-2007 LRFD

CHAIN LINK SAFETY FENCE-NEW STRUCTURES
GENERAL NOTES

STANDARD NO. SUP-FR(FN)-201 SHEET 1 OF 1

SUPER FENCE/RAILING

OLD NO. BR-SS(3.01)-75-21(L)

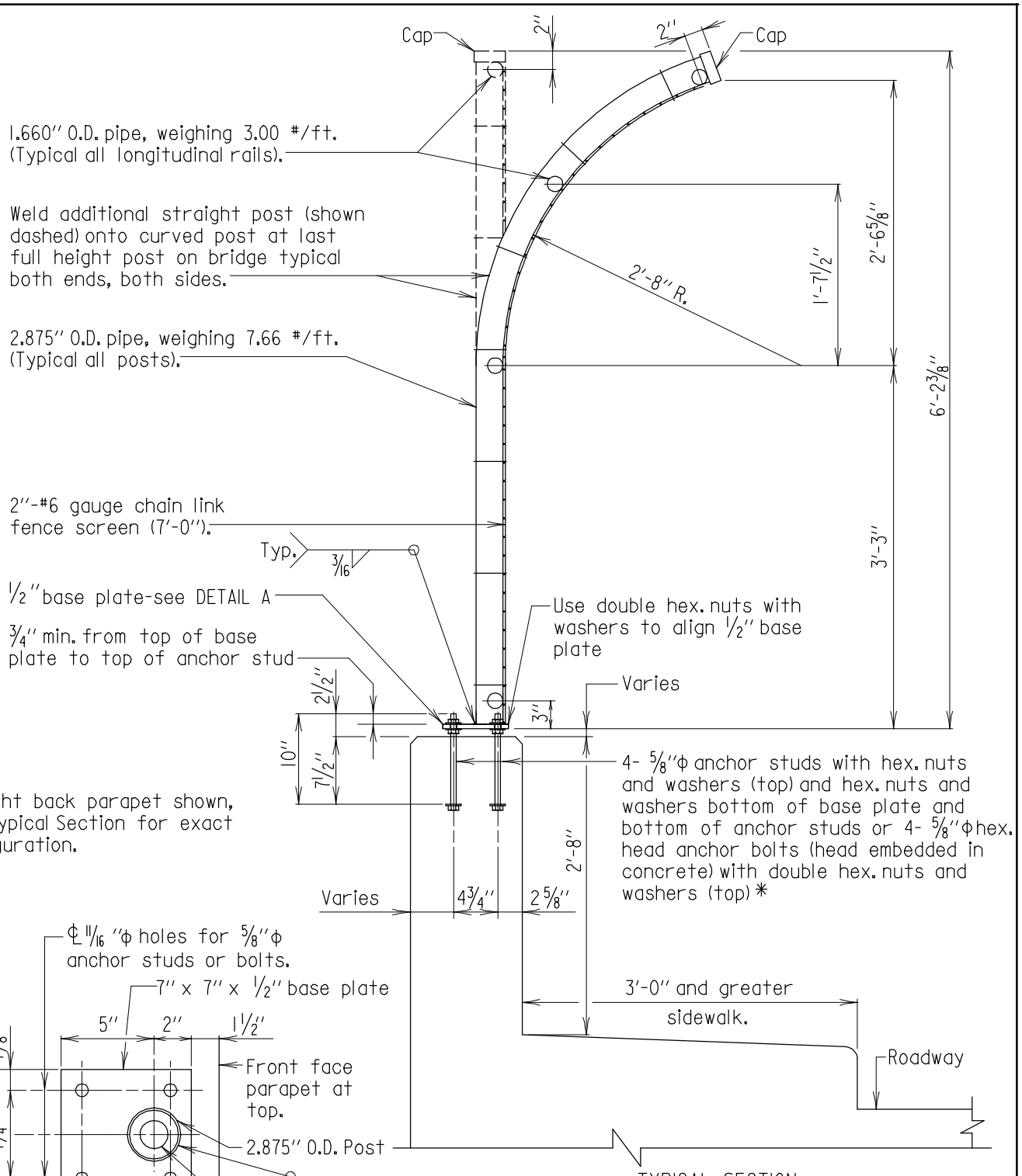

Note:
Straight back parapet shown, see Typical Section for exact configuration.

TYPICAL SECTION
Scale: 3/4"=1'-0"

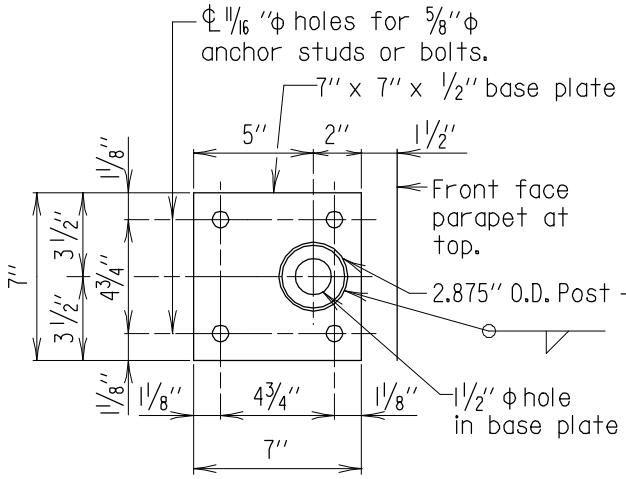

DETAIL A
Scale: 1 1/2" =1'-0"

* As an option, the Contractor may set the anchor studs after placing concrete barrier using 7/8" dia. cored holes and an approved epoxy grout. Nuts and washers shall be omitted from the embedded ends of anchor studs. No additional compensation will be allowed for this option.

Note:
Type I Fence shall only be used adjacent to sidewalks 3'-0" or greater.

APPROVAL		
E.S. Freedman DIRECTOR OFFICE OF STRUCTURES		
DATE: 6/8/76		
REVISIONS		
SHA	FHWA	
11-17-97		
3-20-01		
10-22-03		
9-24-13		

FHWA APPROVAL	
DATE: 11-9-76	

STATE OF MARYLAND
DEPARTMENT OF TRANSPORTATION
STATE HIGHWAY ADMINISTRATION
OFFICE OF STRUCTURES

TYPE I CHAIN LINK SAFETY FENCE
NEW STRUCTURES

STANDARD NO. SUP-FR(FN)-202 SHEET 1 OF 3

SUPER FENCE/RAILING

OLD NO. BR-SS(3.02)-75-22

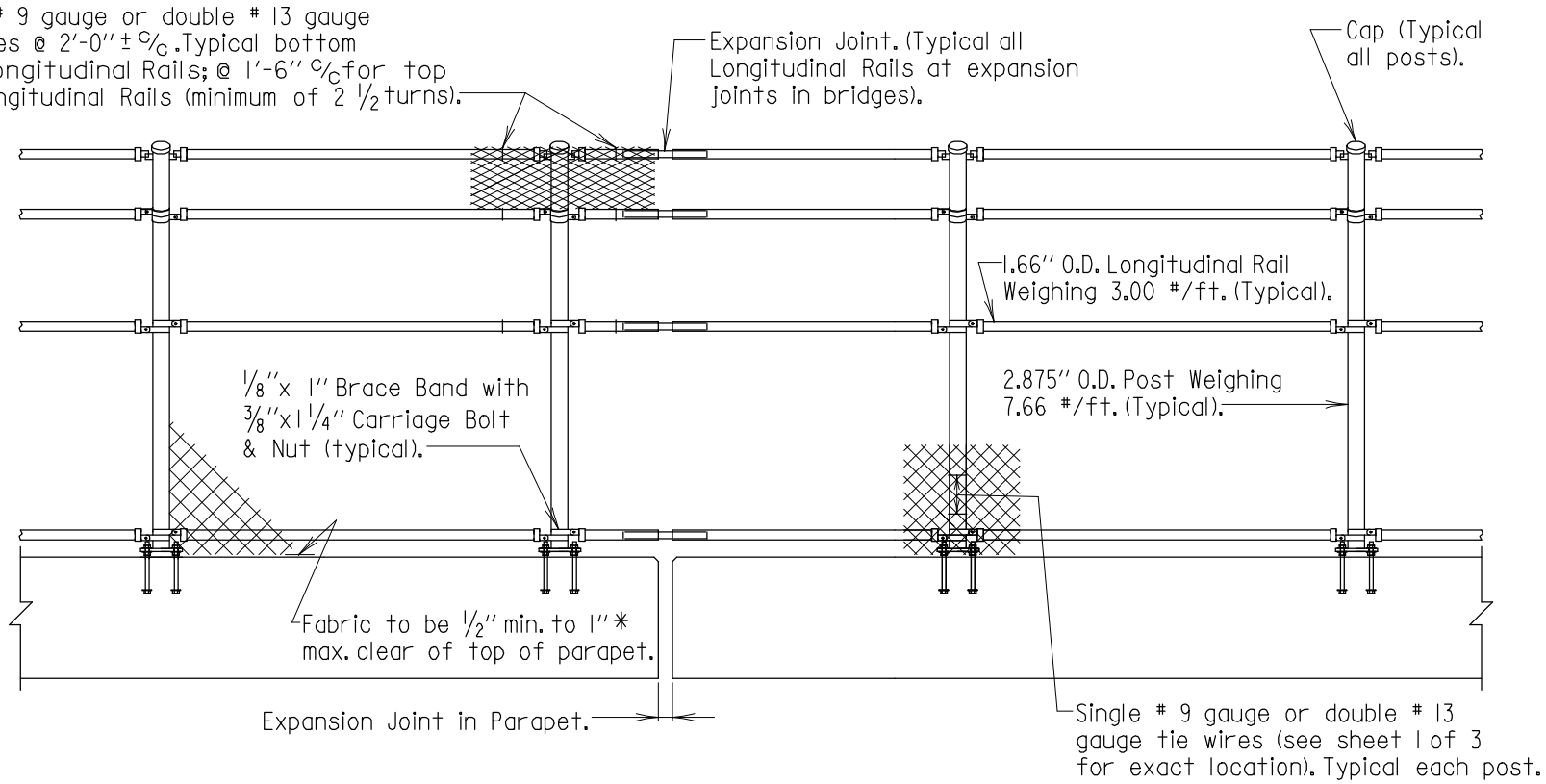

ELEVATION

Scale: 3/8"=1'-0"

* Before placing fencing, place 1/2" to 1" thick material (wood, etc.) on top of parapet to ensure the desired gap is achieved. After fence is rigidly attached, this temporary blocking shall be removed.

FHWA APPROVAL	
DATE: 11-9-76	

APPROVAL

DIRECTOR OFFICE OF STRUCTURES

DATE: 6/8/76

REVISIONS	
SHA	FHWA
1-1-88	6-8-90
11-17-97	
1-22-01	
9-24-13	

STATE OF MARYLAND
DEPARTMENT OF TRANSPORTATION
STATE HIGHWAY ADMINISTRATION
OFFICE OF STRUCTURES

TYPE I CHAIN LINK SAFETY FENCE
NEW STRUCTURES

STANDARD NO. SUP-FR(FN)-202

SHEET 2 OF 3

OLD NO. BR-SS(3.02)-75-22

SUPER FENCE/RAILING

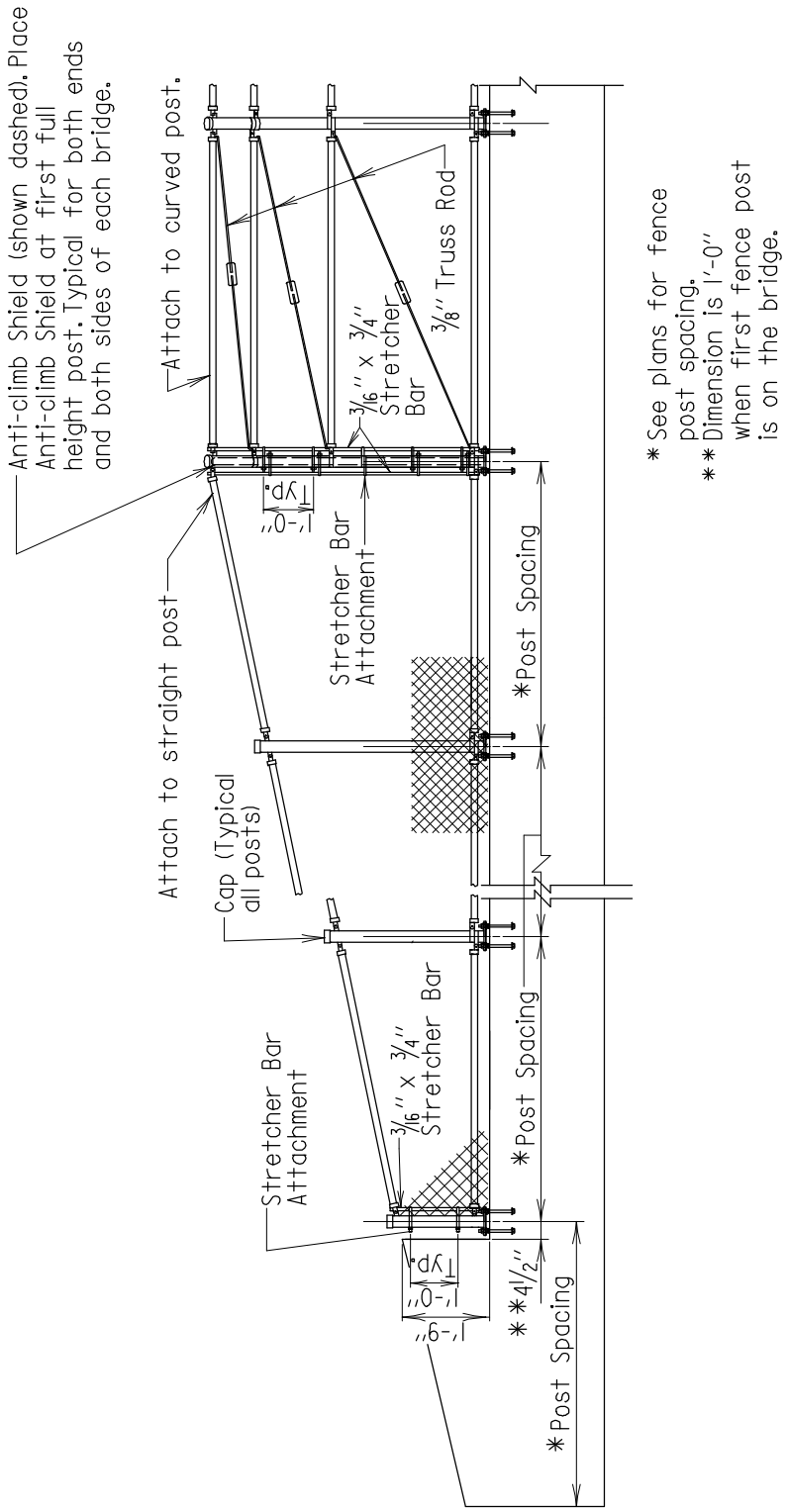

END SECTION DETAIL

Scale: 1/4''=1'-0''

APPROVAL		
R.S. Freedman DIRECTOR OFFICE OF STRUCTURES DATE: 6/19/89		
REVISIONS		
SHA	FHWA	
7-31-98		
1-22-01		
9-22-06		
9-24-13		

FHWA APPROVAL	
DATE: 6-8-90	

STATE OF MARYLAND
DEPARTMENT OF TRANSPORTATION
STATE HIGHWAY ADMINISTRATION
OFFICE OF STRUCTURES

TYPE I CHAIN LINK SAFETY FENCE
NEW STRUCTURES

STANDARD NO. SUP-FR(FN)-202 SHEET 3 OF 3

SUPER FENCE/RAILING

OLD NO. BR-SS(3.02)-75-22

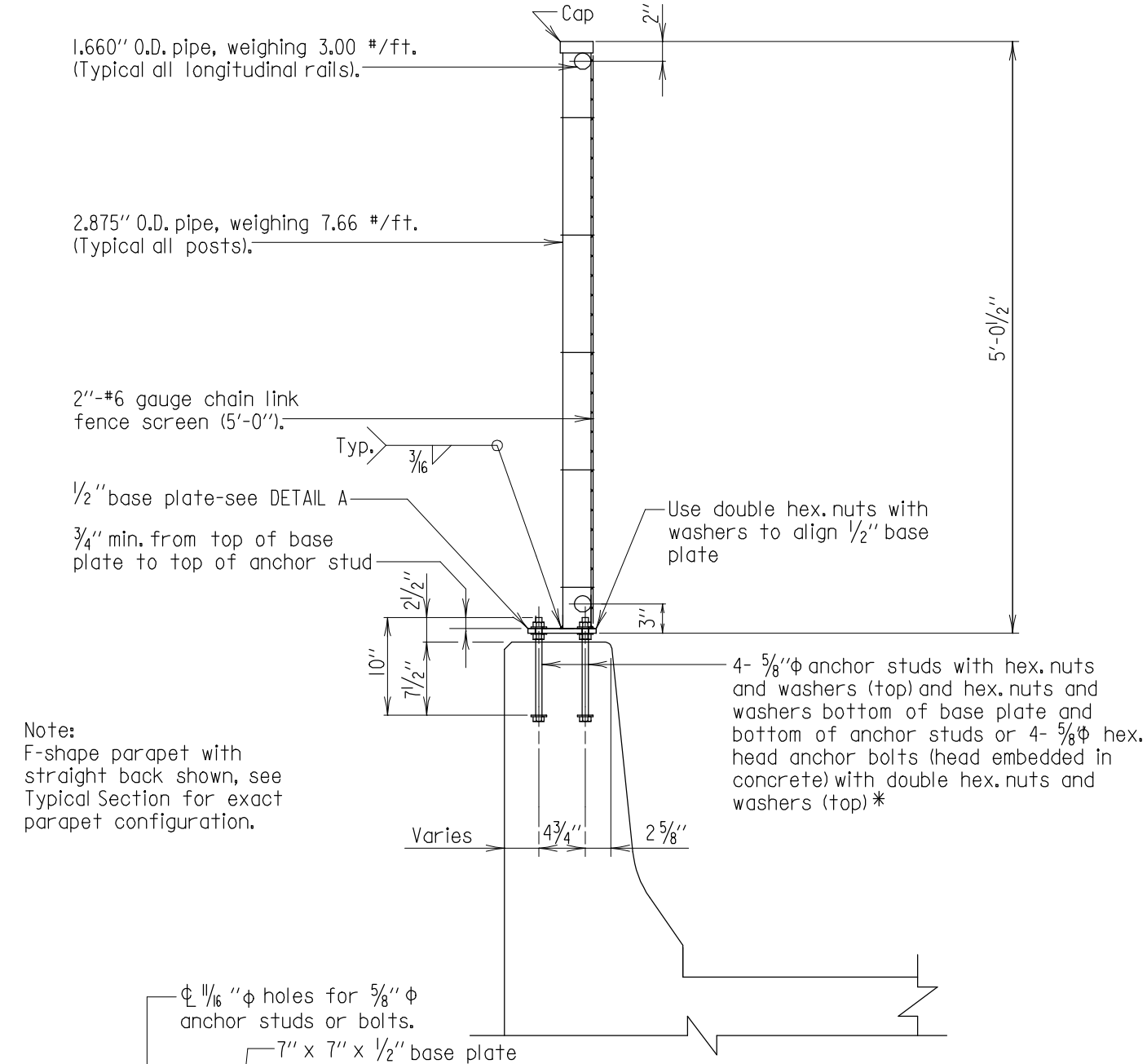

Note:
F-shape parapet with straight back shown, see Typical Section for exact parapet configuration.

TYPICAL SECTION

Scale: 3/4''=1'-0''

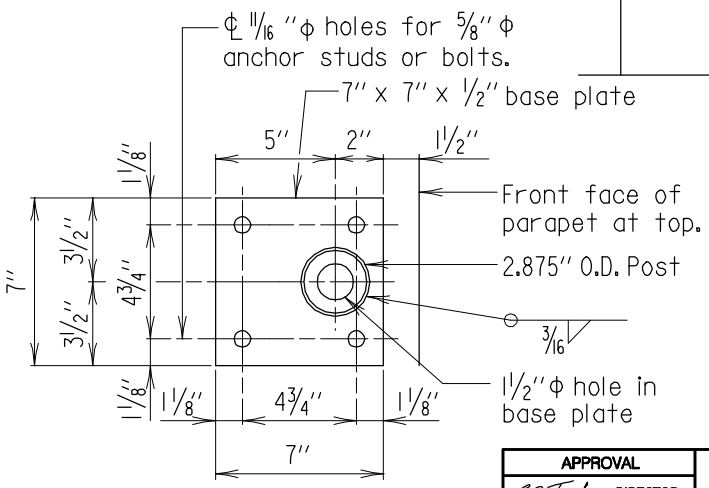

DETAIL A

Scale: 1 1/2''=1'-0''

* As an option, the Contractor may set the anchor studs after placing concrete barrier using 7/8'' dia. cored holes and an approved epoxy grout. Nuts and washers shall be omitted from the embedded ends of anchor studs. No additional compensation will be allowed for this option.

APPROVAL		
E.S. Freedman DIRECTOR OFFICE OF STRUCTURES		
DATE: 6/8/76		
REVISIONS		
SHA	FHWA	
11-17-97		
3-21-01		
6-1-05		
9-24-13		

FHWA APPROVAL
DATE: 11-9-76

STATE OF MARYLAND
DEPARTMENT OF TRANSPORTATION
STATE HIGHWAY ADMINISTRATION
OFFICE OF STRUCTURES

TYPE II CHAIN LINK SAFETY FENCE
FOR NEW STRUCTURES
WITH F-SHAPE PARAPET

STANDARD NO. SUP-FR(FN)-203 **SHEET** 1 **OF** 3

SUPER FENCE/RAILING

OLD NO. BR-SS(3.03)-75-23

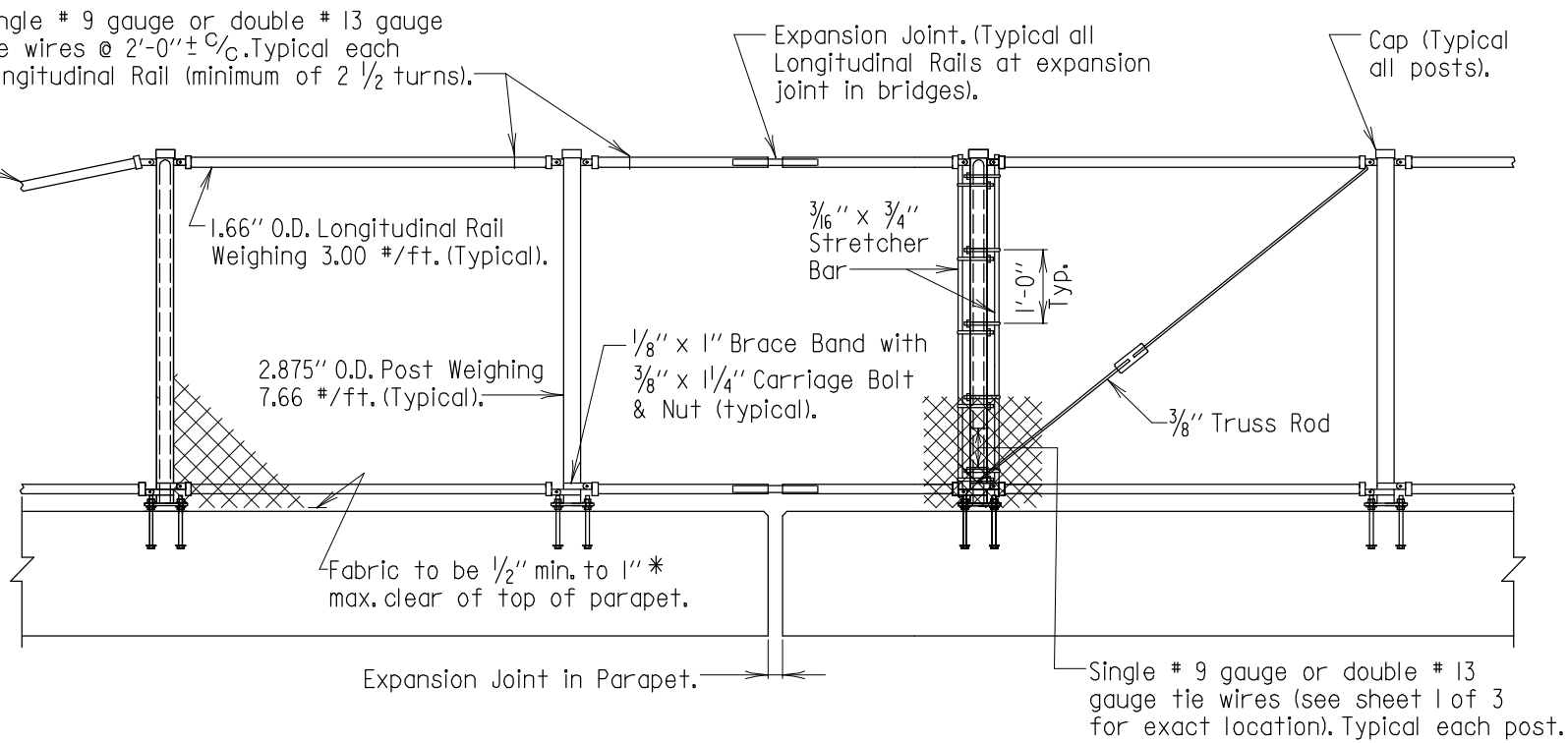

ELEVATION

Scale: 3/8"=1'-0"

* Before placing fencing, place 1/2" to 1" thick material (wood, etc.) on top of parapet to ensure the desired gap is achieved. After fence is rigidly attached, this temporary blocking shall be removed.

FHWA APPROVAL
DATE: 11-9-76

APPROVAL

DIRECTOR OFFICE OF STRUCTURES

DATE: 6/8/76

REVISIONS	
SHA	FHWA
11-17-97	6-8-90
3-21-01	
6-1-05	
9-24-13	

STATE OF MARYLAND
DEPARTMENT OF TRANSPORTATION
STATE HIGHWAY ADMINISTRATION
OFFICE OF STRUCTURES

TYPE II CHAIN LINK SAFETY FENCE
FOR NEW STRUCTURES
WITH F-SHAPE PARAPET

STANDARD NO. SUP-FR(FN)-203

SHEET 2 OF 3

OLD NO. BR-SS(3.03)-05-23

SUPER FENCE/RAILING

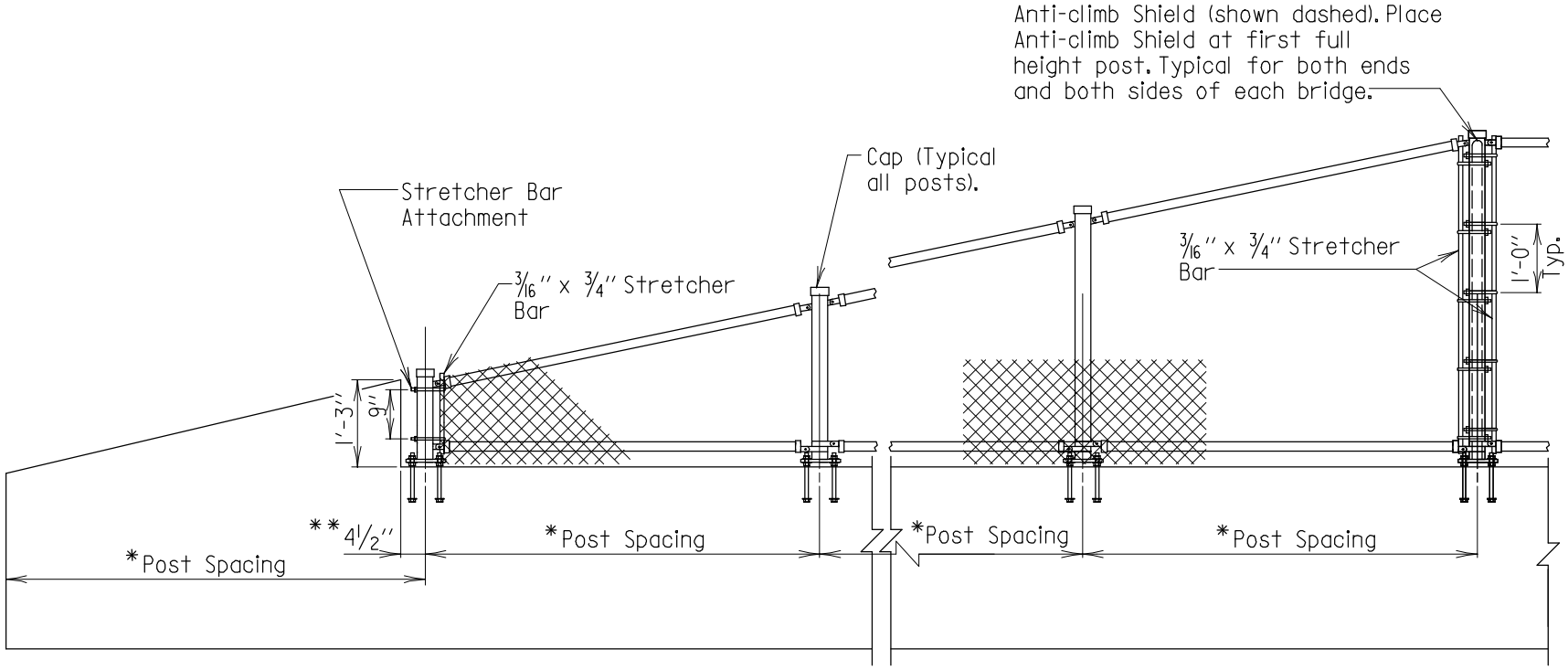

END SECTION DETAIL

Scale: 3/8"=1'-0"

* See plans for fence post spacing.

** Dimension is 1'-0" when first fence post is on the bridge.

APPROVAL	
DIRECTOR OFFICE OF STRUCTURES	
DATE: 6/19/89	
REVISIONS	
SHA	FHWA
11-17-97	
6-1-05	
9-24-13	

FHWA APPROVAL
DATE: 6-8-90

STATE OF MARYLAND
DEPARTMENT OF TRANSPORTATION
STATE HIGHWAY ADMINISTRATION
OFFICE OF STRUCTURES

TYPE II CHAIN LINK SAFETY FENCE
FOR NEW STRUCTURES
WITH F-SHAPE PARAPET

STANDARD NO. SUP-FR(FN)-203

SHEET 3 OF 3

OLD NO. BR-SS(3.03)-05-23

SUPER FENCE/RAILING

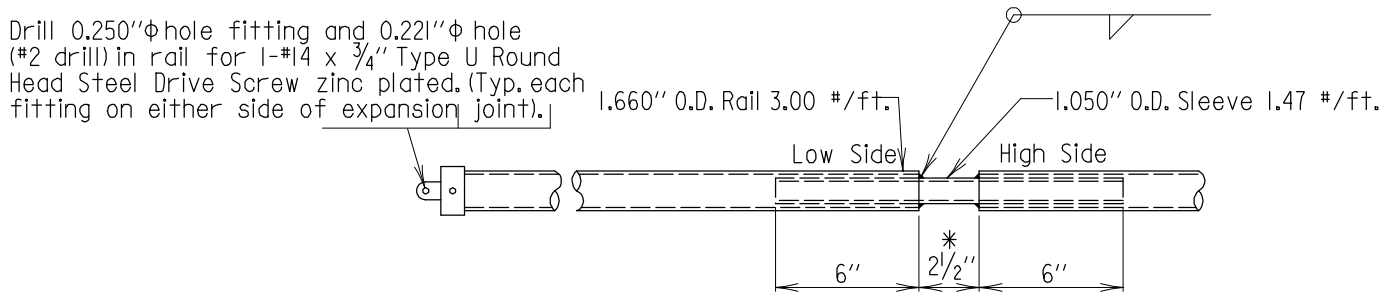

EXPANSION JOINT DETAILS

Scale: 1 1/2" = 1'-0"

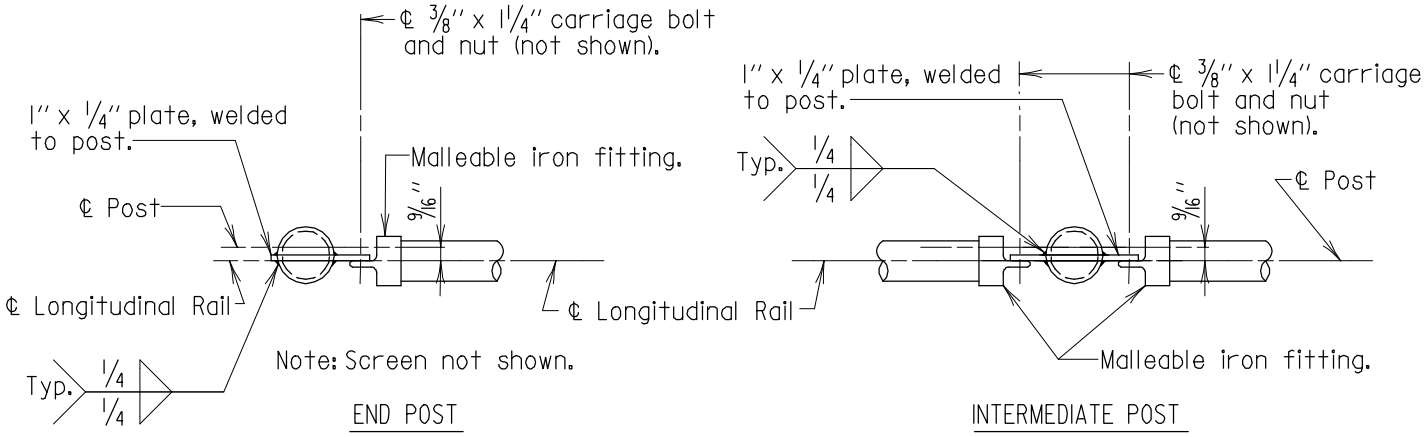

TOP LONGITUDINAL RAIL - POST ATTACHMENT

Scale: 1 1/2" = 1'-0"

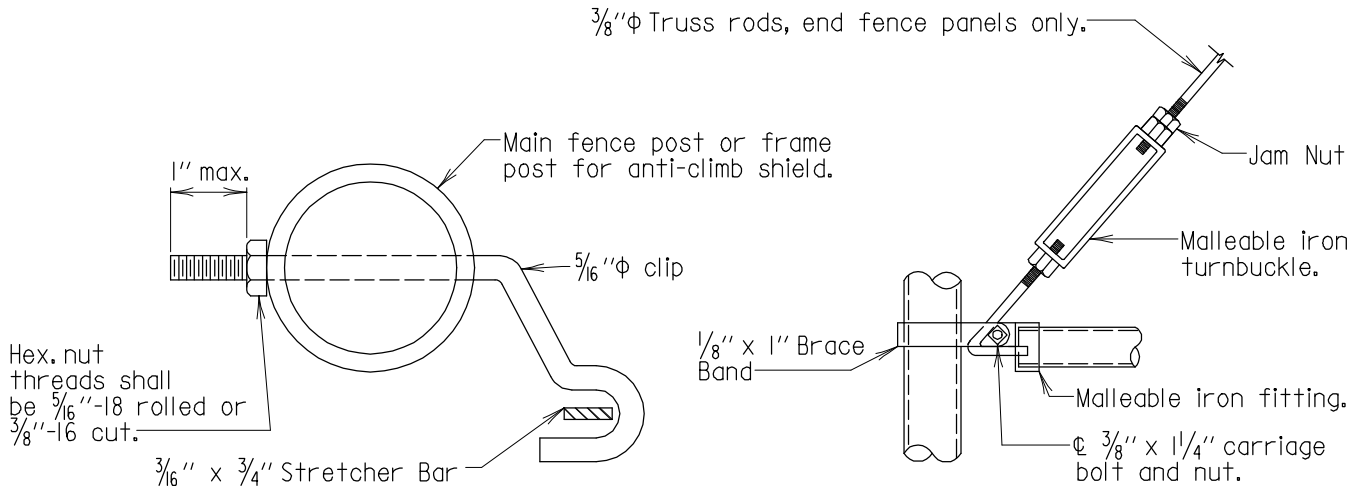

STRETCHER BAR ATTACHMENT

Scale: None

TRUSS ROD ATTACHMENT

Scale: 1 1/2" = 1'-0"

* If opening in parapet is 2 1/2" or less. If opening is greater then this, dimension shall be increased to match proposed movement.

APPROVAL	
R.S. Friedman DIRECTOR OFFICE OF STRUCTURES	
DATE: 6/3/76	
REVISIONS	
SHA	FHWA
8-4-87	6-8-90
1-22-01	
FHWA APPROVAL	
DATE: 11-9-76	

STATE OF MARYLAND
DEPARTMENT OF TRANSPORTATION
STATE HIGHWAY ADMINISTRATION
OFFICE OF STRUCTURES

CHAIN LINK SAFETY FENCE - NEW STRUCTURES
MISCELLANEOUS DETAILS

STANDARD NO. SUP-FR(FN)-204 SHEET 1 OF 1

SUPER FENCE/RAILING

OLD NO. BR-SS(3.04)-75-24

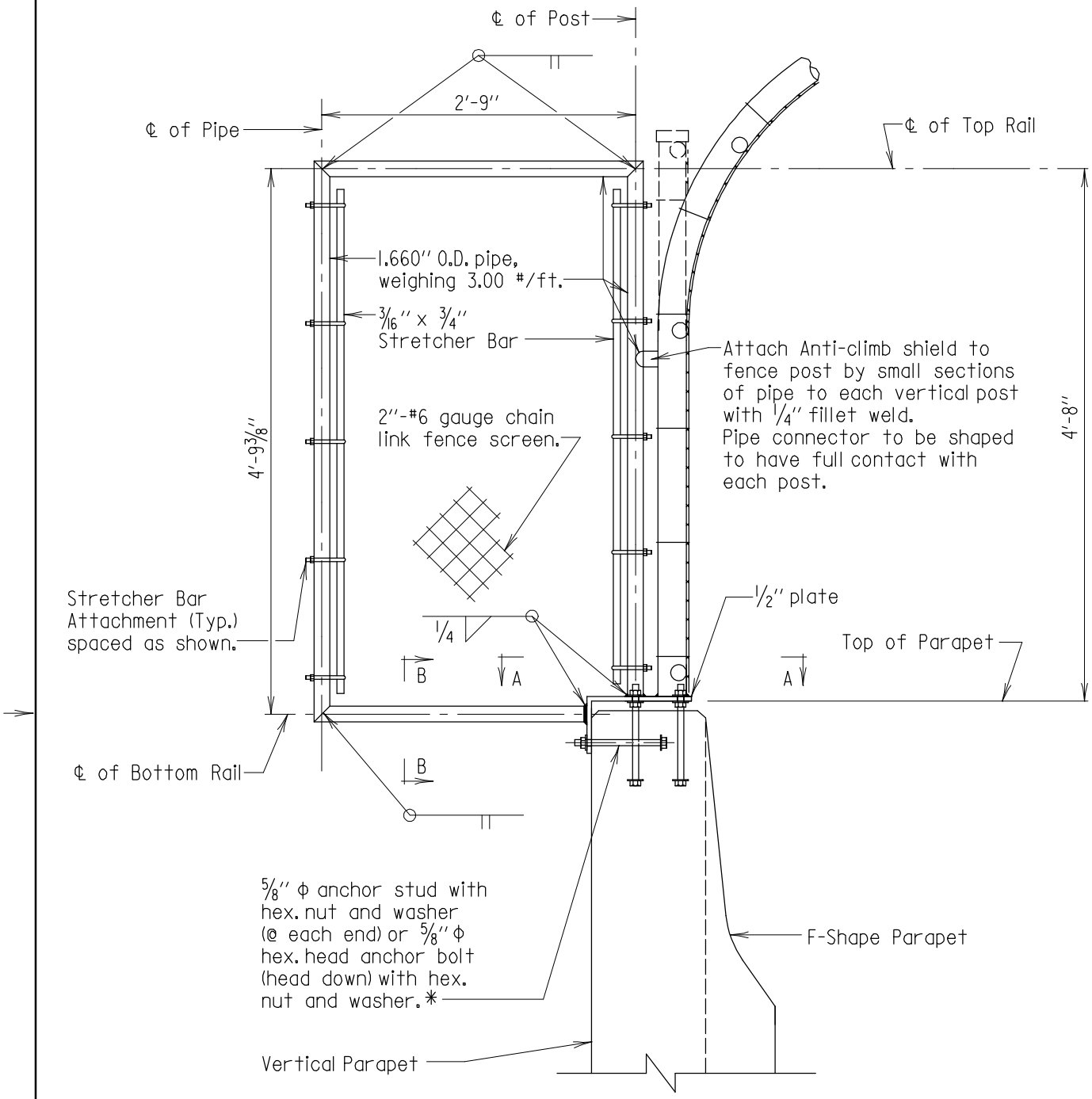

* As an option, the Contractor may set the anchor studs after placing concrete barrier using 7/8" dia. cored holes and an approved epoxy grout. Nuts and washers shall be omitted from the embedded ends of anchor studs. No additional compensation will be allowed for this option.

TYPICAL SECTION

Scale: 3/4" = 1'-0"

Note:
Straight back parapet shown, see Typical Section for exact configuration.

Notes:
1. For Sections A-A and B-B see Sheet 2 of 2 of this standard.
2. For additional anchor bolt details see to std. SUP-FR(FN)-202 or SUP-FR(FN)-203.

APPROVAL	
R.S. Freedman DIRECTOR OFFICE OF STRUCTURES	
DATE: 6/3/76	
REVISIONS	
SHA	FHWA
3-13-01	
7-26-01	
9-2-03	
9-24-13	

FHWA APPROVAL	
DATE: 10-3-80	

STATE OF MARYLAND
DEPARTMENT OF TRANSPORTATION
STATE HIGHWAY ADMINISTRATION
OFFICE OF STRUCTURES

ANTI-CLIMB SHIELD FOR
CHAIN LINK SAFETY FENCES TYPES I AND II

STANDARD NO. SUP-FR(FN)-205 SHEET 1 OF 2

SUPER FENCE/RAILING

OLD NO. BR-SS(3.05)-75-25

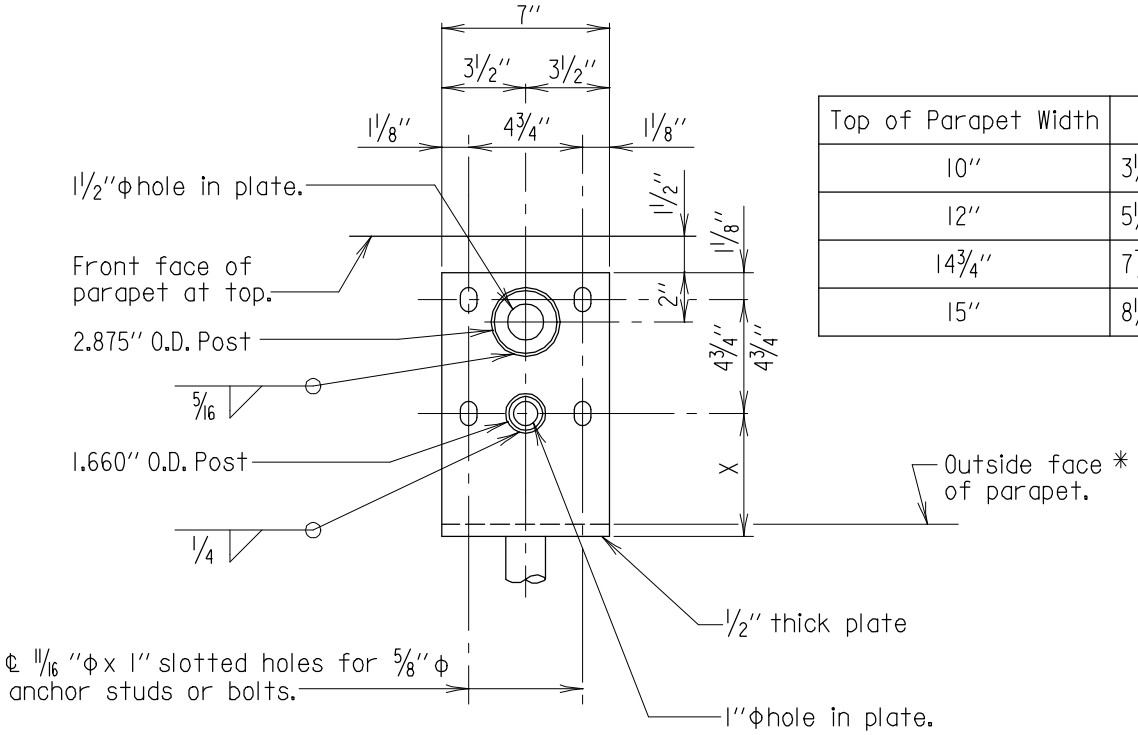

Top of Parapet Width	X
10''	3 1/8''
12''	5 1/8''
14 3/4''	7 7/8''
15''	8 1/8''

SECTION A-A

Scale: 1 1/2'' = 1'-0''

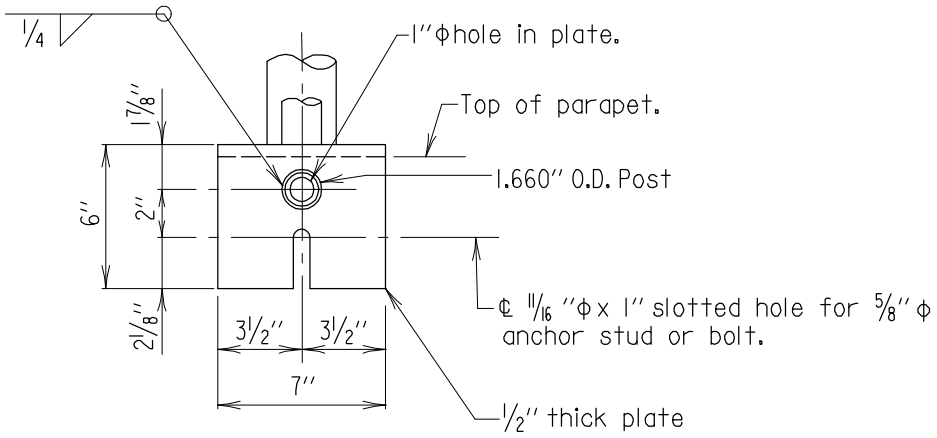

SECTION B-B

Scale: 1 1/2'' = 1'-0''

* For Special Parapets outside face of parapet to be formed with a 8'' wide recess, perpendicular to top of parapet, to accept anti-climb shield base plate. Recess to be 5'' long measured from top of parapet.

APPROVAL	
R. S. Freedman DIRECTOR OFFICE OF STRUCTURES	
DATE: 6/3/76	
REVISIONS	
SHA	FHWA
8-3-84	11-8-84
1-11-88	6-8-90
3-21-01	
9-24-13	

FHWA APPROVAL	
DATE: 10-3-80	

STATE OF MARYLAND
DEPARTMENT OF TRANSPORTATION
STATE HIGHWAY ADMINISTRATION
OFFICE OF STRUCTURES

ANTI-CLIMB SHIELD FOR
CHAIN LINK SAFETY FENCES TYPES I AND II

STANDARD NO. SUP-FR(FN)-205 SHEET 2 OF 2

SUPER-FRENCHING FRANCE STRAILONG

OLD NO. BR-SS(3.05)-75-25

GENERAL NOTES

Specifications: Latest SHA Specifications and Special Provisions for materials and construction. Latest AASHTO Standard Specifications for Highway Bridges for design.

Materials: Posts and rails shall conform to ASTM F-1083, Schedule 80. Fabric shall be 6 gauge, 2" PVC coated mesh conforming to 914.01.

All posts, braces, fittings and hardware shall be PVC coated. Coating shall conform to 914.03 except that nuts, bolts and washers shall also be PVC coated and touched up after installation.

All plates shall be steel conforming to ASTM A 709 Grade 36.

Anchor studs or anchor bolts shall conform to ASTM A 276, Type 430 or Type 304 stainless steel annealed, hot-finished, ultimate strength 70 000 psi min., 20% min. elongation. Threads may be rolled or cut.

Epoxy grout for anchor studs in cored holes shall conform to 902.11 (d).

PVC color for all elements of fence shall be black unless otherwise noted.

Construction: All longitudinal rails shall be parallel to top of wall.

All posts shall be set normal to top of wall for roadway grades 6% or less. For grades over 6% posts shall be set plumb.

The chain link fence shall be true to line, taut, tight fit to top of wall (1/2" maximum gap) and shall comply with the best practice for fence construction of this type.

Post and rails shall be permanently positioned before fabric is placed.

For post spacing see pertinent structure sheets.

Precoated longitudinal rails, if cut, shall have the cut end coated with PVC touch up material supplied by the manufacturer prior to erection.

If Contractor elects to place anchor studs after placing concrete wall, newly placed rebars shall be located so that coring does not damage same, all holes shall be cored (not drilled) and the diameter of the cored holes for the anchor studs shall be 7/8".

Measurement and Payment: The furnishing, fabricating, erecting, etc., of all new chain link fence on the retaining wall or culvert headwalls and wing walls, complete in place, will not be measured for payment but all costs thereof shall be included in the Contract lump sum prices for the pertinent Retaining Wall or Box Culvert item(s).

Any defects uncovered by the inspection of welds on base plates and poles shall be repaired or replaced by new members at no additional cost to the Administration.

APPROVAL		
R.S. Freedman DIRECTOR OFFICE OF STRUCTURES DATE: 11/6/96		
REVISIONS		
SHA	FHWA	
3-13-01		
7-24-01		
FHWA APPROVAL		
DATE:		

STATE OF MARYLAND
DEPARTMENT OF TRANSPORTATION
STATE HIGHWAY ADMINISTRATION
OFFICE OF STRUCTURES

CHAIN LINK SAFETY FENCE
RETAINING WALLS AND BOX CULVERTS
GENERAL NOTES

STANDARD NO. SUP-FR(FN)-301 SHEET 1 OF 1

SUPER FENCE/RAILING

OLD NO. BR-SS(3.11)-96-317

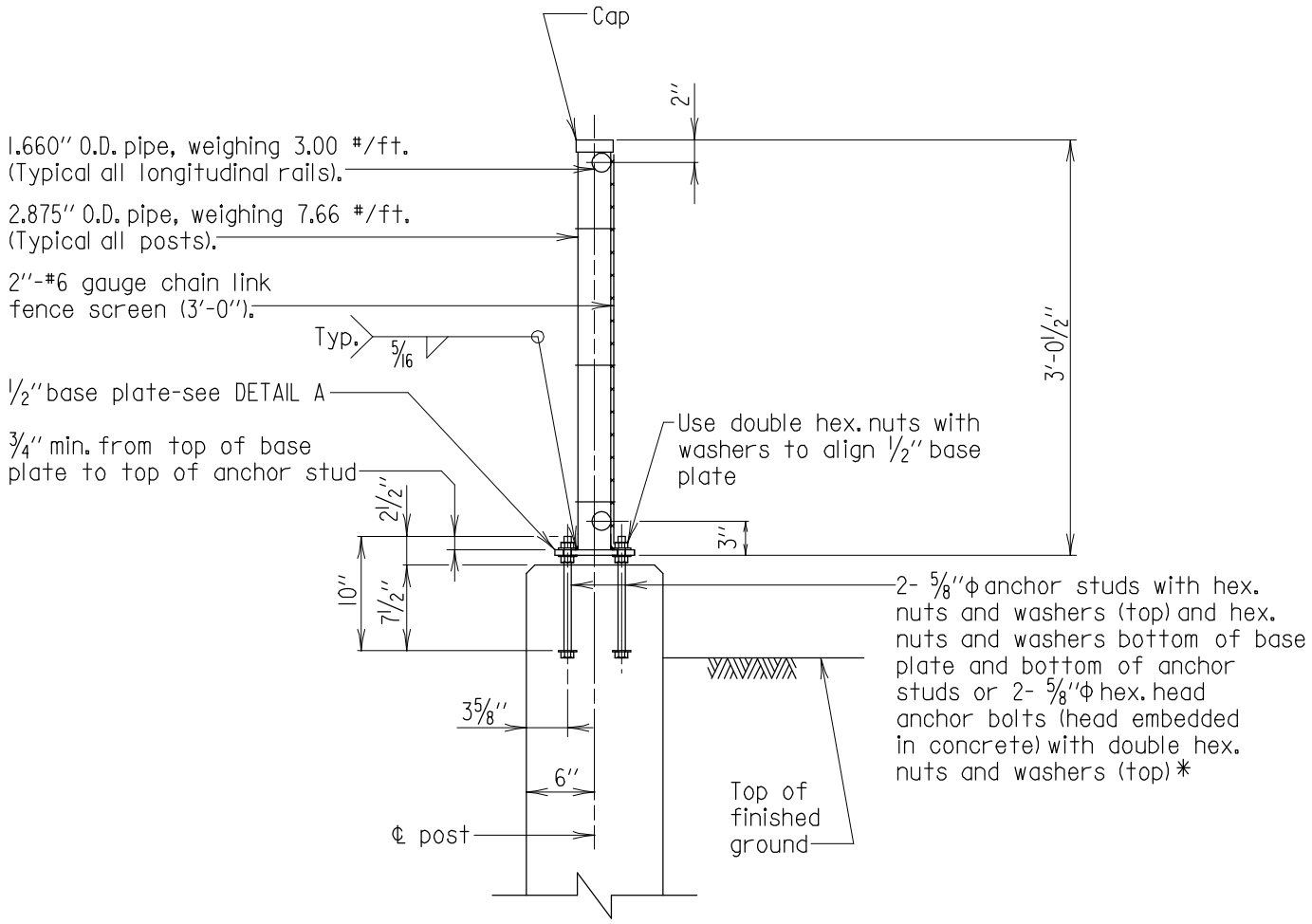

TYPICAL SECTION

Scale: 3/4'' = 1'-0''

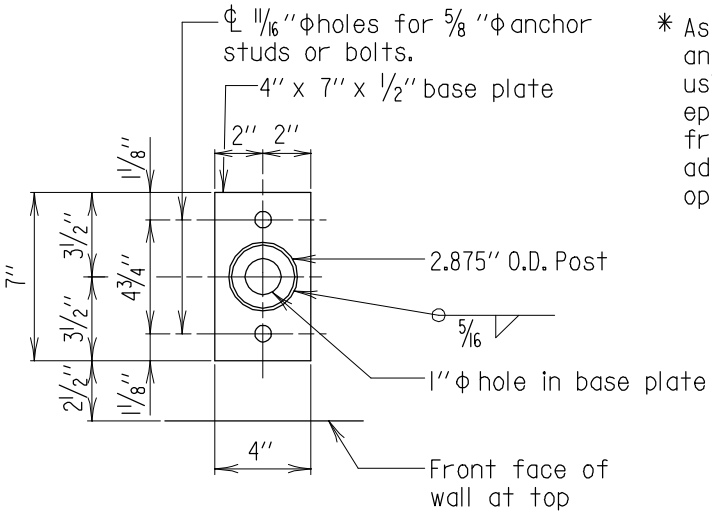

DETAIL A

Scale: 1 1/2'' = 1'-0''

* As an option, the Contractor may set the anchor studs after placing concrete wall using 7/8'' dia. cored holes and an approved epoxy grout. Nuts and washers shall be omitted from the embedded ends of anchor studs. No additional compensation will be allowed for this option.

Note:
This fence shall be used on box culverts with headwalls located at the bottom of fill slopes.

APPROVAL	
R.S. Freedman DIRECTOR OFFICE OF STRUCTURES DATE: 11/6/96	
REVISIONS	
SHA	FHWA
3-13-01	
3-31-10	
9-24-13	
1-14-14	

FHWA APPROVAL	
DATE:	

STATE OF MARYLAND
DEPARTMENT OF TRANSPORTATION
STATE HIGHWAY ADMINISTRATION
OFFICE OF STRUCTURES

TYPE III CHAIN LINK SAFETY FENCE
RETAINING WALLS AND BOX CULVERTS

STANDARD NO. SUP-FR(FN)-302 SHEET 1 OF 2

SUPER FENCE/RAILING

OLD NO. BR-SS(3.12)-96-318

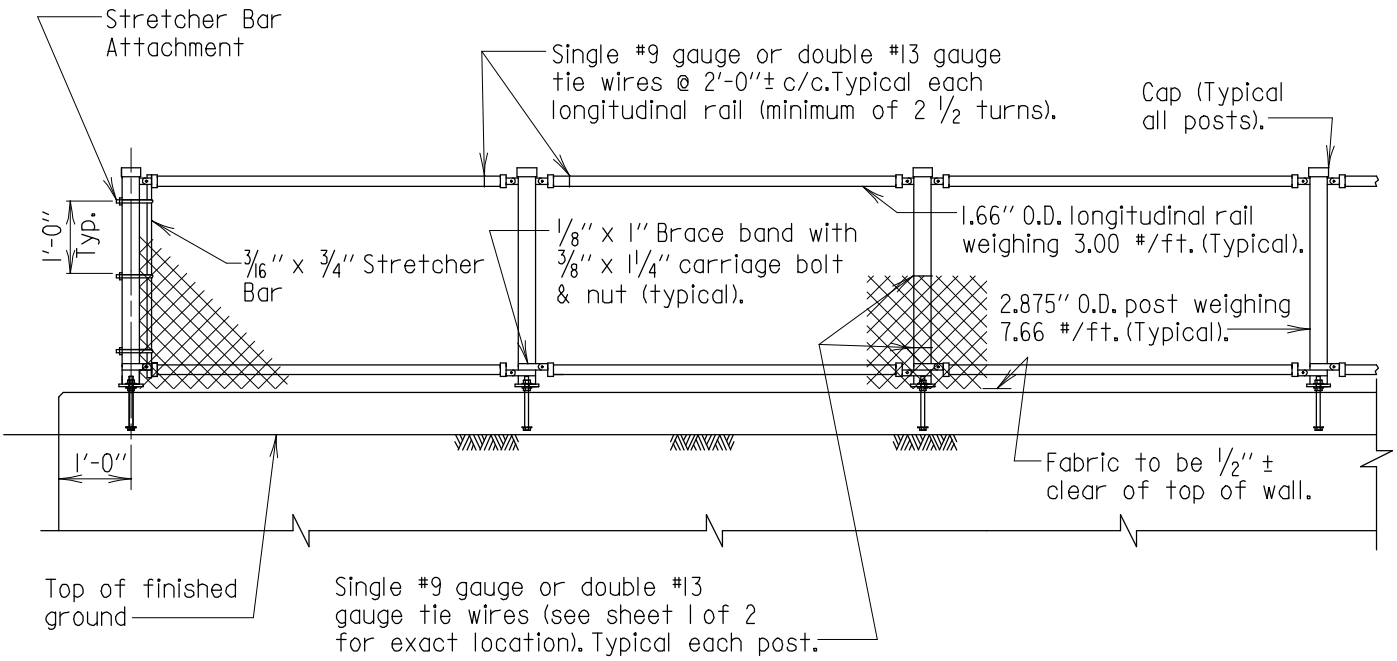

ELEVATION

Scale: 3/8" = 1'-0"

Note:
For additional details see Std. No. SUP-FR(FN)-204

APPROVAL	
E.S. Freedman DIRECTOR OFFICE OF STRUCTURES	
DATE: 11/6/96	
REVISIONS	
SHA	FHWA
3-31-10	
9-24-13	
1-14-14	
FHWA APPROVAL	
DATE:	

STATE OF MARYLAND
DEPARTMENT OF TRANSPORTATION
STATE HIGHWAY ADMINISTRATION
OFFICE OF STRUCTURES

TYPE III CHAIN LINK SAFETY FENCE
RETAINING WALLS AND BOX CULVERTS

STANDARD NO. SUP-FR(FN)-302 SHEET 2 OF 2

SUPER FENCE/RAILING

OLD NO. BR-SS(3.12)-96-318

GENERAL NOTES

Specifications: Latest SHA Specifications and Special Provisions for materials and construction. Latest AASHTO Standard Specifications for Highway Bridges for design.

Materials: All posts and pickets shall be hot rolled steel conforming to A 787, G90. All rail channels shall be rolled "U" channels conforming to A 653, G90. All steel shall be hot dipped galvanized in conformance with A 525, G90.

All pickets for the fences shall be square with 16 gauge thickness and a tensile strength of 50,000 psi.

All horizontal rails for the fence shall be 1⅜" wide by 1½" deep, and shall be rolled into "U" channels with a wall thickness of 0.12".

Rail attachment bracket shall be die cast of zinc per ASTM B 86-83 Z 33521. Ball and socket design capable of 30 degrees swivel. Bracket shall fully encapsulate rail end.

Rings shall be cast aluminum. Attach rings to top rail by inserting mounting block into top rail and riveting through side of rail using ¼" rivet. Hold bottom of ring in place by inserting dowel that protrudes from ring through predrilled hole in middle rail. Rings may be omited if the slope of the railing is set at an angle more than 10 degrees.

Vertical posts for the fence shall be 2" square with a 14 gauge thickness and a tensile strength of 50,000 psi.

All anchor plates shall be steel conforming to A 709, Grade 50.

Anchor studs or anchor bolts shall conform to A 276, Type 430 or Type 304 stainless steel annealed, hot-finished, ultimate strength 70,000 psi min., 20% min. elongation. Threads may be rolled or cut.

Epoxy grout for anchor studs in cored holes shall conform to 902.11 (d).

Construction: All picket, rail, bracket and post attachments shall be made with ¼" industrial drive rivets.

All longitudinal rails shall be parallel to top of wall.

All metal shall be given a polyester resin based powder coating applied by the electrostatic spray process.

The finished color shall be black.

For post spacing see pertinent structure sheets.

Precoated longitudinal rails, if cut, shall have the cut end coated with touch up material supplied by the manufacturer prior to erection.

Measurement and Payment: The furnishing, fabricating, erecting, etc., of all new fence on the bridges, complete in place, will not be measured for payment but all costs thereof shall be incidental to the '5-foot Ornamental Fence' item.

Any defects uncovered by the inspection of welds on base plates and posts shall be repaired or replaced by new members at no additional cost to the Administration.

Useable DRAFT

* USEABLE DRAFT *

APPROVAL	
_____ DEPUTY CHIEF ENGR. BRIDGE DEVEL.	
DATE: 09/01/15	
REVISIONS	
SHA	FHWA
FHWA APPROVAL	
DATE:	

STATE OF MARYLAND
DEPARTMENT OF TRANSPORTATION
STATE HIGHWAY ADMINISTRATION
OFFICE OF BRIDGE DEVELOPMENT

ORNAMENTAL FENCE GENERAL NOTES

NO. SUP-FR(FN)-401 SHEET 1 OF 1

SUPER FENCE/RAILING

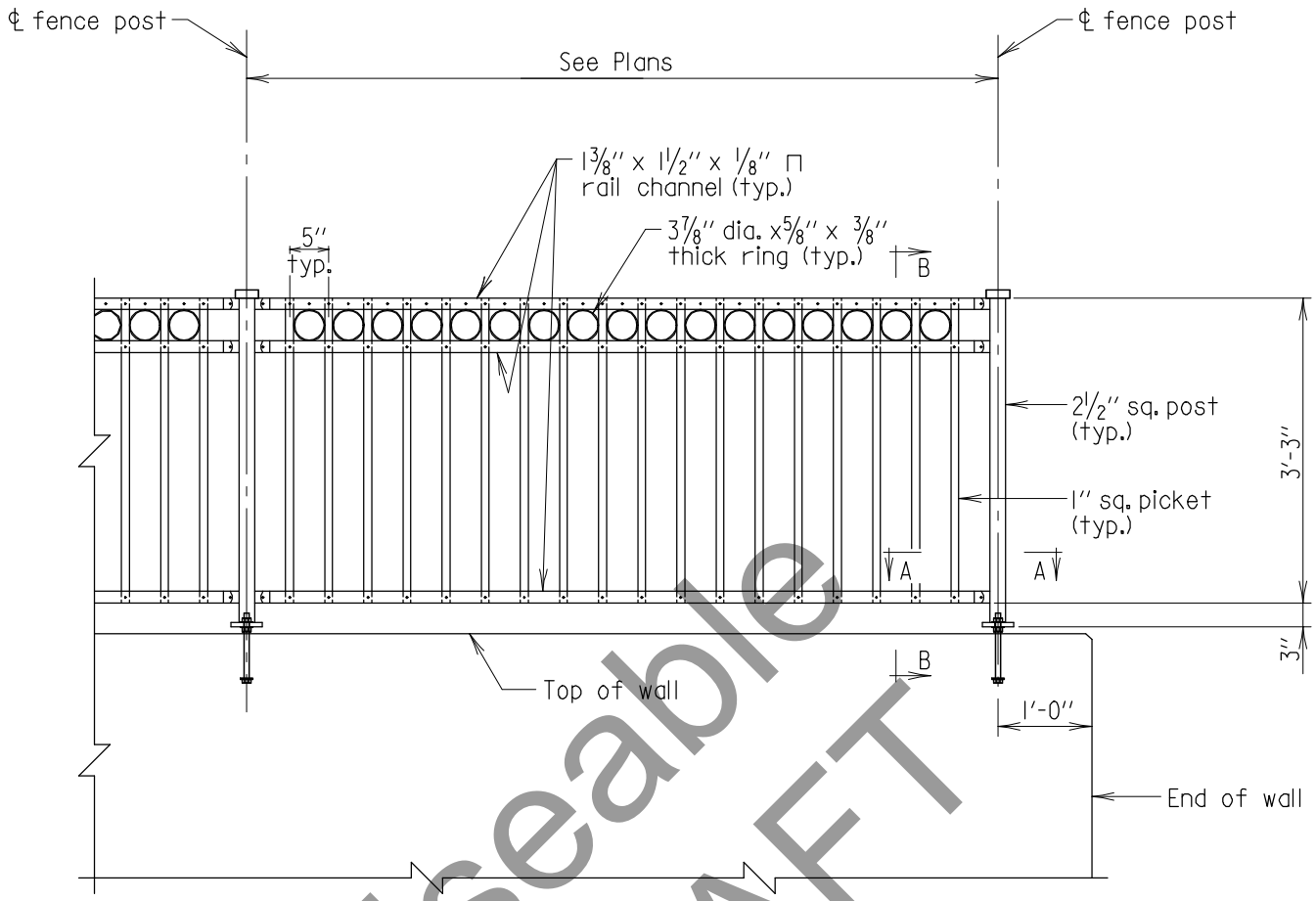

ORNAMENTAL FENCE ELEVATION

Scale: 1/2" = 1'-0"

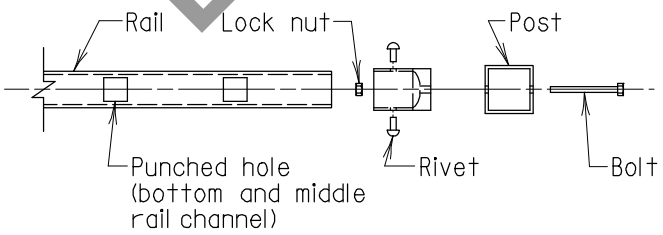

SECTION A-A (EXPLODED)

Scale: 1 1/2" = 1'-0"

Useable DRAFT

* USEABLE DRAFT *

APPROVAL	
_____ DEPUTY CHIEF ENGR. BRIDGE DEVEL. DATE: 09/01/15	
REVISIONS	
SHA	FHWA
FHWA APPROVAL	
DATE:	

STATE OF MARYLAND
DEPARTMENT OF TRANSPORTATION
STATE HIGHWAY ADMINISTRATION
OFFICE OF BRIDGE DEVELOPMENT

3 FOOT ORNAMENTAL FENCE DETAILS

NO. SUP-FR(FN)-402 SHEET 1 OF 3

SUPER FENCE/RAILING

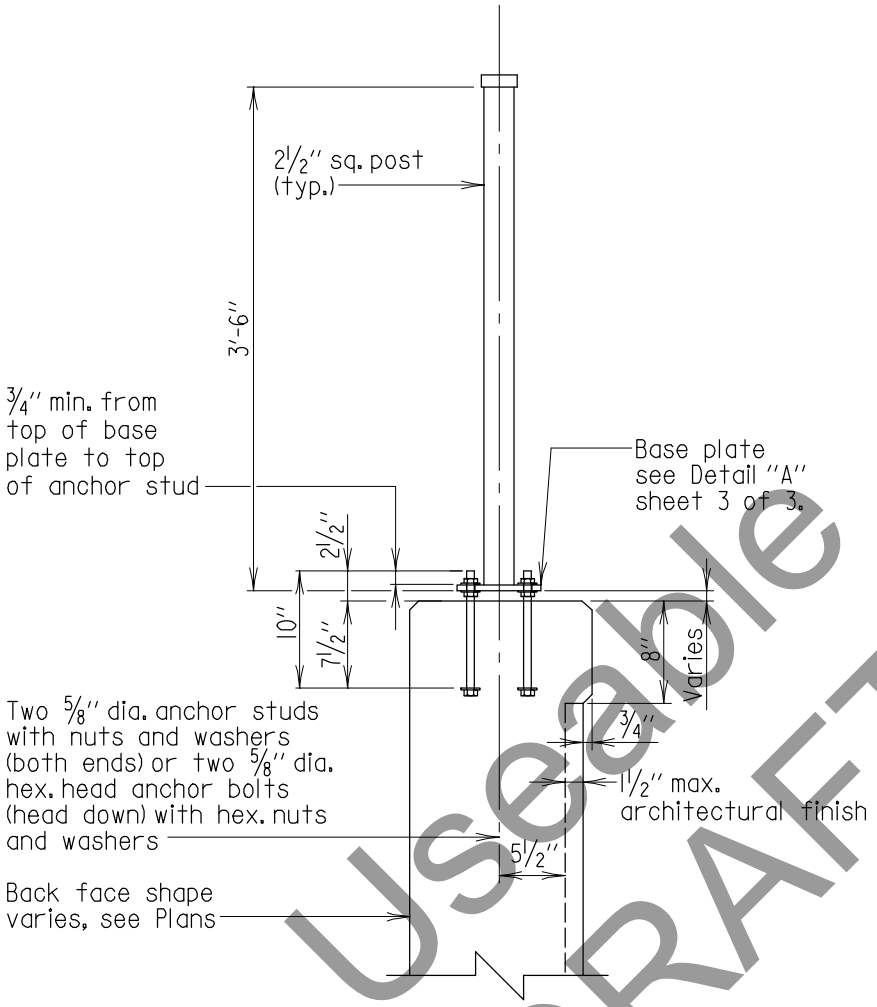

TYPICAL SECTION

Scale: ¾" = 1'-0"

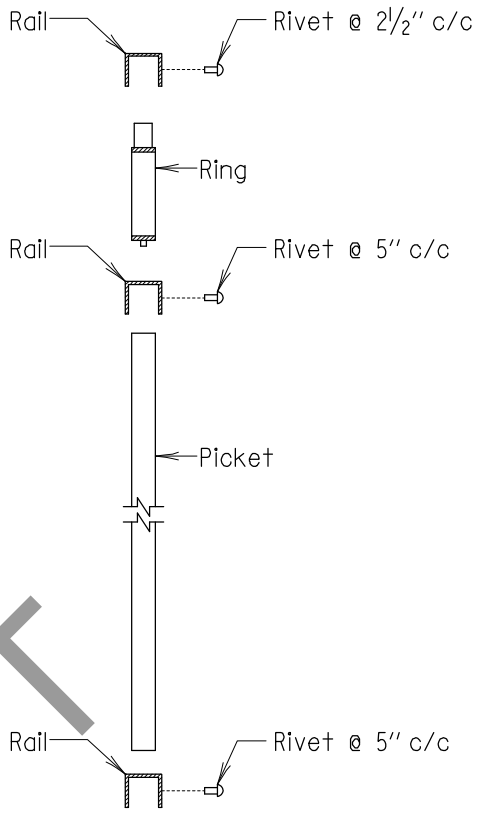

SECTION B-B (EXPLODED)

Scale: 1½" = 1'-0"

Useable DRAFT

Notes:
1. All fence posts shall be set normal to top of wall.
2. All longitudinal rail channels shall be parallel to top of wall.
3. For fence post spacing, see General Plan and Elevation.

* USEABLE DRAFT *

APPROVAL	
_____ DEPUTY CHIEF ENGR. BRIDGE DEVEL.	
DATE: 09/01/15	
REVISIONS	
SHA	FHWA
FHWA APPROVAL	
DATE:	

STATE OF MARYLAND
DEPARTMENT OF TRANSPORTATION
STATE HIGHWAY ADMINISTRATION
OFFICE OF BRIDGE DEVELOPMENT

3 FOOT ORNAMENTAL FENCE DETAILS

NO. SUP-FR(FN)-402 SHEET 2 OF 3

SUPER FENCE/RAILING

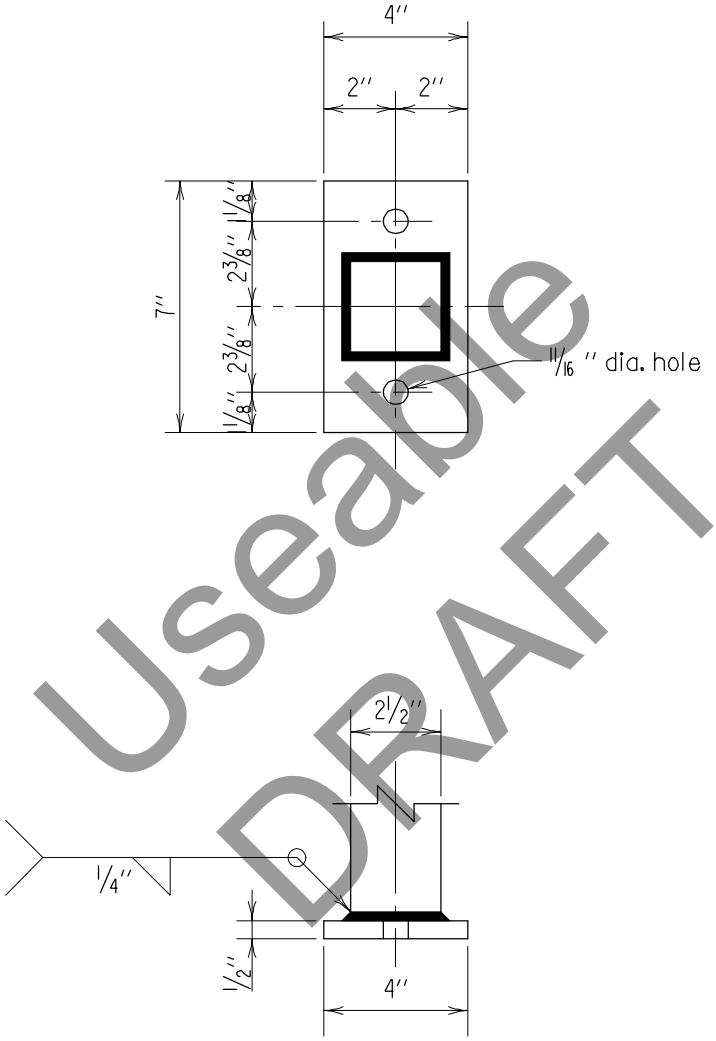

Useable DRAFT

TYPICAL SECTION

Scale: 3'' = 1'-0''

* USEABLE DRAFT *

APPROVAL	
_____ DEPUTY CHIEF ENGR. BRIDGE DEVEL.	
DATE: 09/01/15	
REVISIONS	
SHA	FHWA

FHWA APPROVAL
DATE:

STATE OF MARYLAND
DEPARTMENT OF TRANSPORTATION
STATE HIGHWAY ADMINISTRATION
OFFICE OF BRIDGE DEVELOPMENT

3 FOOT ORNAMENTAL FENCE
BASE PLATE DETAILS

NO. SUP-FR(FN)-402 SHEET 3 OF 3

SUPER FENCE/RAILING

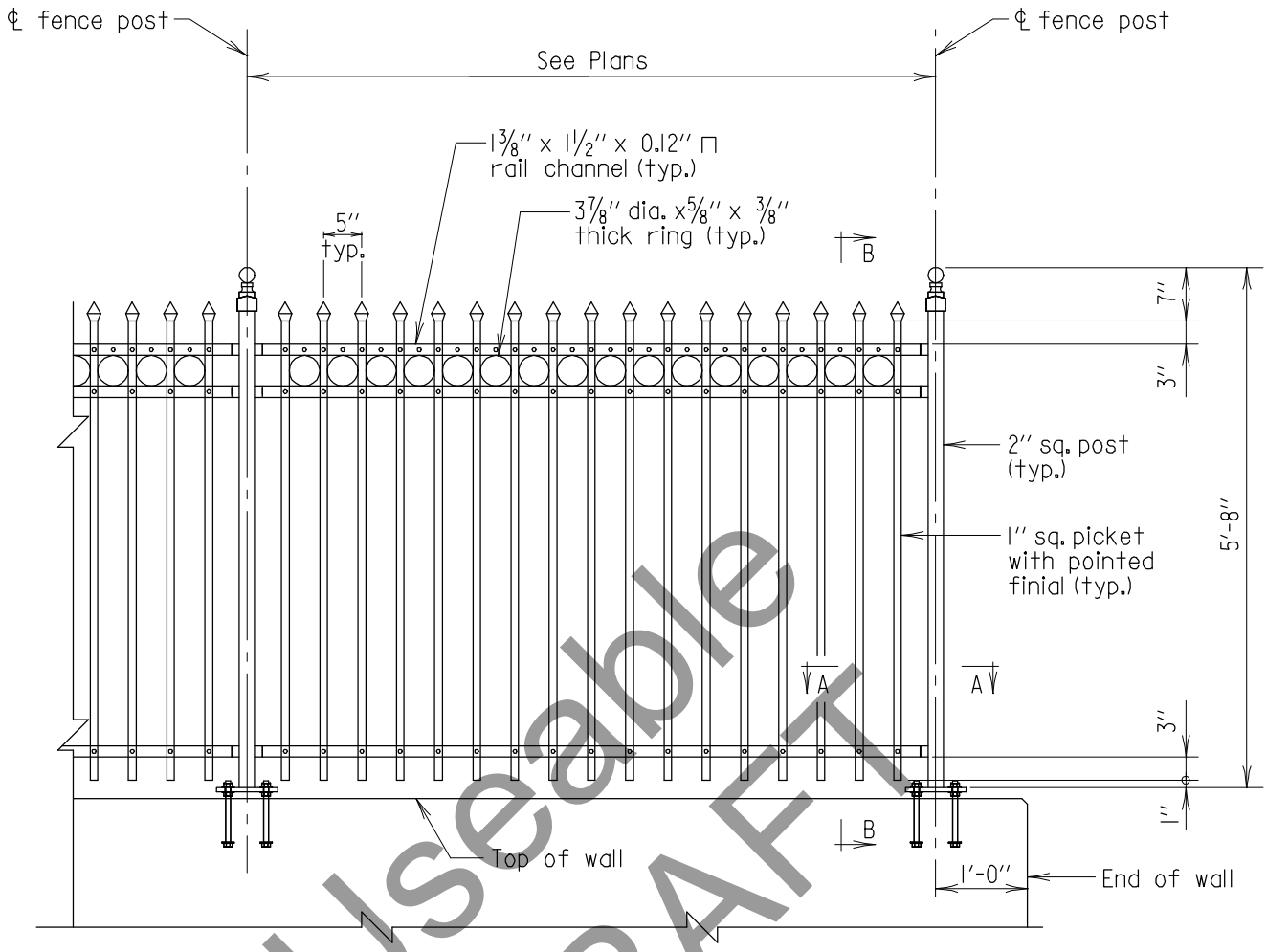

ORNAMENTAL FENCE ELEVATION

Scale: 1/2" = 1'-0"

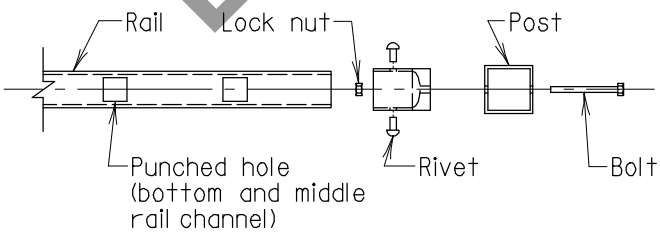

SECTION A-A (EXPLODED)

Scale: 1 1/2" = 1'-0"

Useable DRAFT

* USEABLE DRAFT *

APPROVAL	
_____ DEPUTY CHIEF ENGR. BRIDGE DEVEL.	
DATE: 09/01/15	
REVISIONS	
SHA	FHWA

FHWA APPROVAL
DATE:

STATE OF MARYLAND
DEPARTMENT OF TRANSPORTATION
STATE HIGHWAY ADMINISTRATION
OFFICE OF BRIDGE DEVELOPMENT

5 FOOT ORNAMENTAL FENCE DETAILS

NO. SUP-FR(FN)-403 SHEET 1 OF 3

SUPER FENCE/RAILING

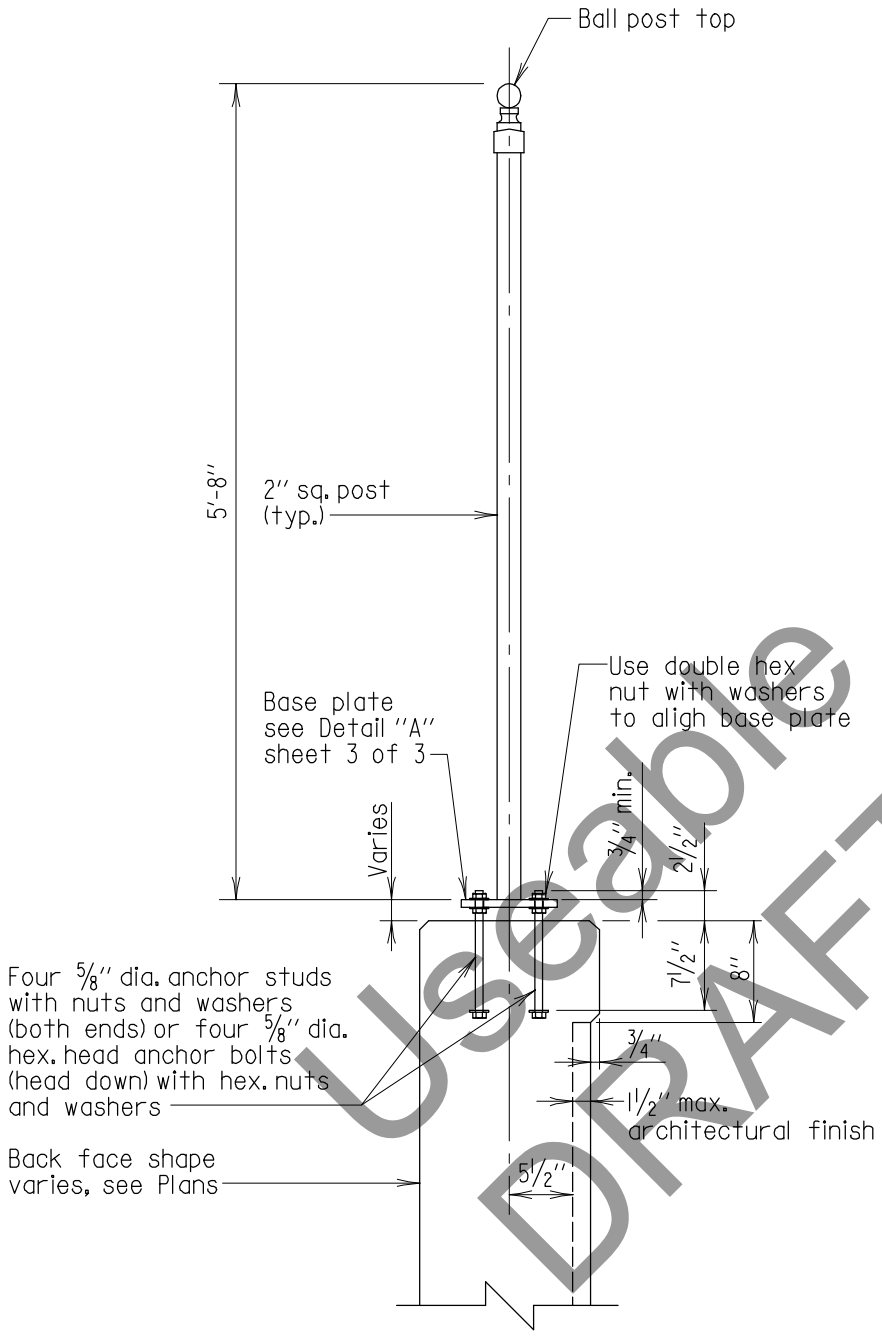

TYPICAL SECTION

Scale: 3/4" = 1'-0"

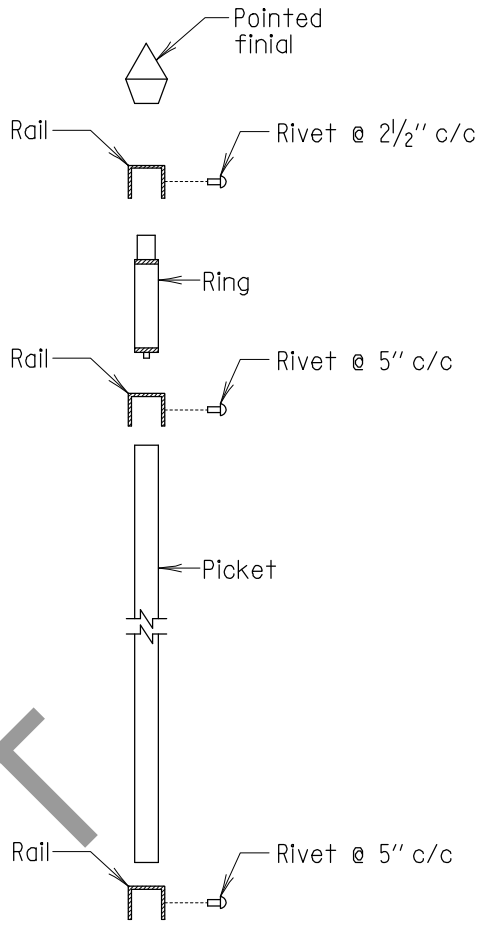

SECTION B-B (EXPLODED)

Scale: 1 1/2" = 1'-0"

Useable DRAFT

Notes:
1. All fence posts shall be set plumb.
2. All longitudinal rail channels shall be parallel to top of wall.
3. For fence post spacing, see General Plan and Elevation.

* USEABLE DRAFT *

APPROVAL	
_____ DEPUTY CHIEF ENGR. BRIDGE DEVEL.	
DATE: 09/01/15	
REVISIONS	
SHA	FHWA

FHWA APPROVAL
DATE:

STATE OF MARYLAND
DEPARTMENT OF TRANSPORTATION
STATE HIGHWAY ADMINISTRATION
OFFICE OF BRIDGE DEVELOPMENT

5 FOOT ORNAMENTAL FENCE DETAILS

NO. SUP-FR(FN)-403 SHEET 2 OF 3

SUPER FENCE/RAILING

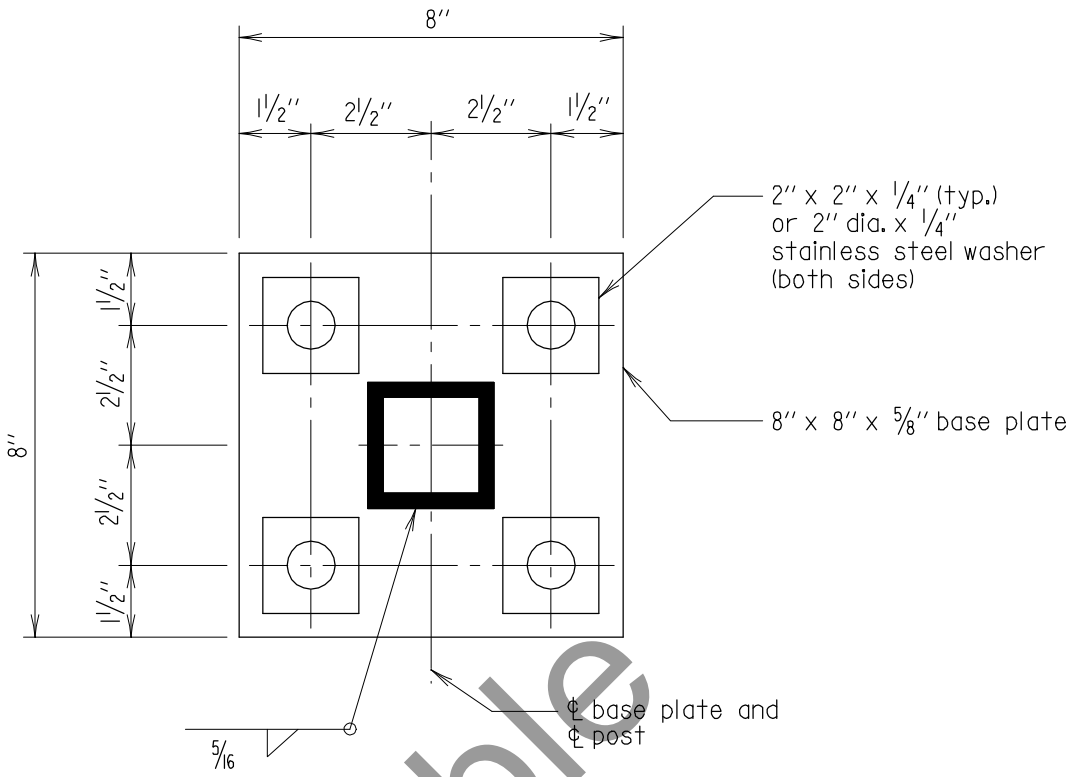

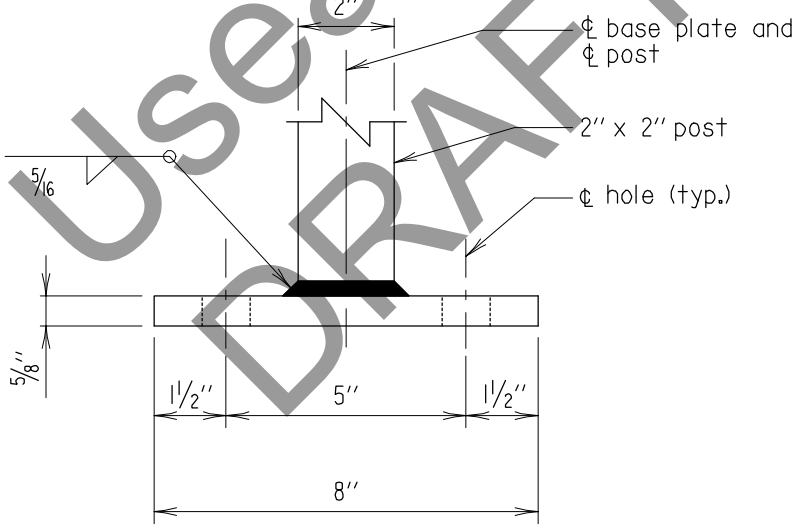

DETAIL ''A''

Scale: 3'' = 1'-0''

Useable DRAFT

* USEABLE DRAFT *

APPROVAL	
_____ DEPUTY CHIEF ENGR. BRIDGE DEVEL. DATE: 09/01/15	
REVISIONS	
SHA	FHWA

FHWA APPROVAL
DATE:

STATE OF MARYLAND
DEPARTMENT OF TRANSPORTATION
STATE HIGHWAY ADMINISTRATION
OFFICE OF BRIDGE DEVELOPMENT

5 FOOT ORNAMENTAL FENCE
BASE PLATE DETAILS

NO. SUP-FR(FN)-403 SHEET 3 OF 3

SUPER FENCE/RAILING

SUPERSTRUCTURE

FENCE AND RAILING

RAILING

(SUP-FR(RL))

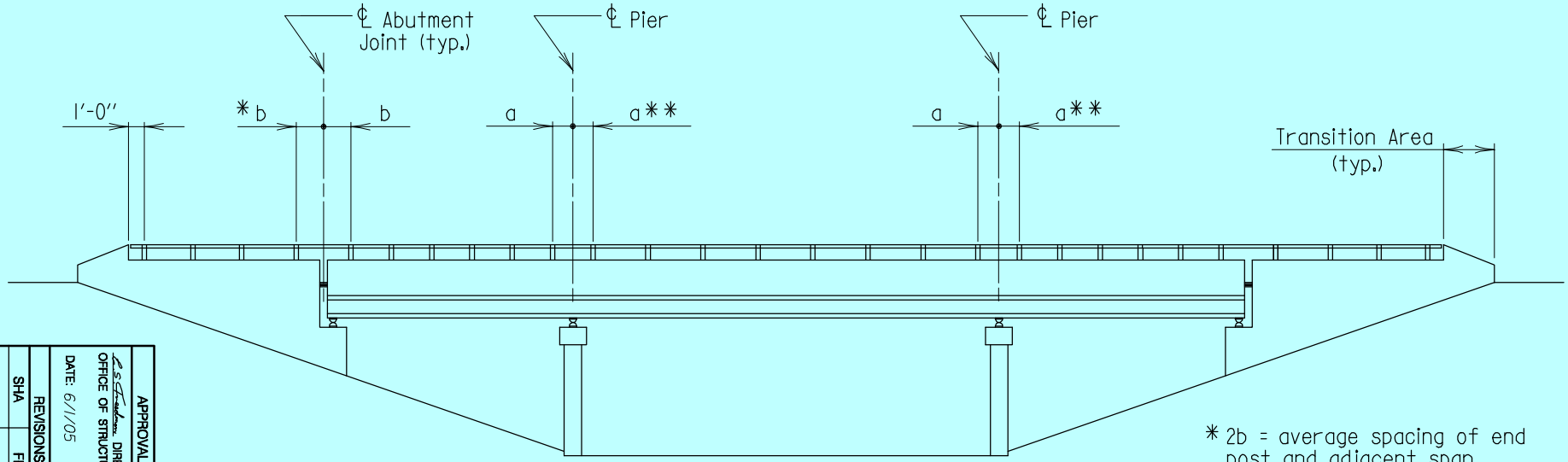

*2b = average spacing of end post and adjacent span.
**2a = average spacing of flanking spans.

ELEVATION - RAILING

Scale: None

POST SPACING ON BRIDGES WITH ONE OR TWO STRAND RAILING

- All spacings shall be equal in each span, and on each end post.
- Rail post spacing should range from 6'-0" min. to 8'-0" max. unless a closer post spacing is required due to crash test and as modified in the transition area described on Sheet 2. Effort should be made to make spacing of posts for all spans as nearly equal as possible.
- Transition areas shall be provided on both ends of the bridge comprised of a tapered concrete lug as shown on Sheet 2 of 2.
- Rail shall be continuous across all supports.

* GUIDE SHEET FOR PLAN DEVELOPMENT ONLY - DO NOT INCLUDE THIS SHEET IN CONTRACT PLANS *

* FOR OFFICE USE ONLY *

STATE OF MARYLAND
DEPARTMENT OF TRANSPORTATION
STATE HIGHWAY ADMINISTRATION
OFFICE OF STRUCTURES

LAYOUT OF RAILING ON BRIDGES

STANDARD NO. SUP-FR(RL)-101

SHEET 1 OF 2

APPROVAL
DIRECTOR
OFFICE OF STRUCTURES
DATE: 6/1/05

REVISIONS
SHA
FHWA

FHWA APPROVAL
DATE:

BRBS NO. BR-05-374

SUPER FENCE/RAILING

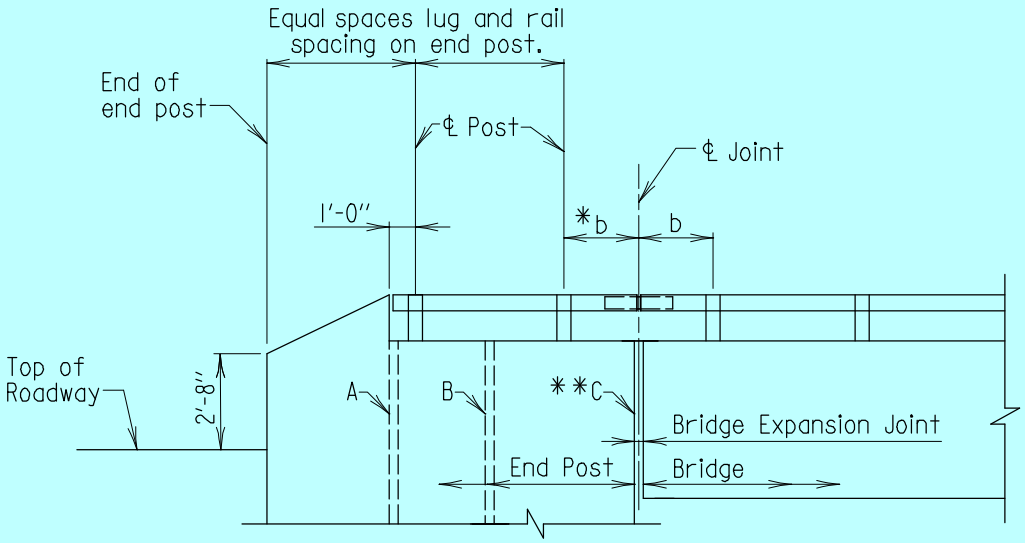

* 2b = average spacing of end post and adjacent span.

ELEVATION - END POST TRANSITION AREA

Scale: None

Notes:
1. Transition areas should be provided on both ends of the bridge, comprised of a tapered concrete lug.
2. Transition areas will always begin at the end of the end posts and be laid out in accordance with the following chart.
3. All rail spaces shall be equal in each span.

END POST TRANSITION AREA

Roadway Joint Location	End Post Length	Rail Panels on End Post
A	L ≤ 8'-0"	0
B	8'-0" < L ≤ 12'-0"	1/2
**C	20'-0" < L	(n + 1/2) full rail panel

** Location of Bridge Expansion Joint C varies depending on the number of full height rail panels on the endpost.

n = the number of full rail panels on the end post

APPROVAL	
E.S. Freedman DIRECTOR OFFICE OF STRUCTURES DATE: 6/1/05	
REVISIONS	
SHA	FHWA

FHWA APPROVAL
DATE:

STATE OF MARYLAND
DEPARTMENT OF TRANSPORTATION
STATE HIGHWAY ADMINISTRATION
OFFICE OF STRUCTURES

LAYOUT OF RAILING ON BRIDGES

STANDARD NO. SUP-FR(RL)-101 SHEET 2 OF 2

SUPER FENCE/RAILING

OLD NO. BR-SS(3.13)-05-374

SUPERSTRUCTURE

FENCE AND RAILING

PROTECTIVE BARRIER over RAILROAD

(SUP-FR(RR))

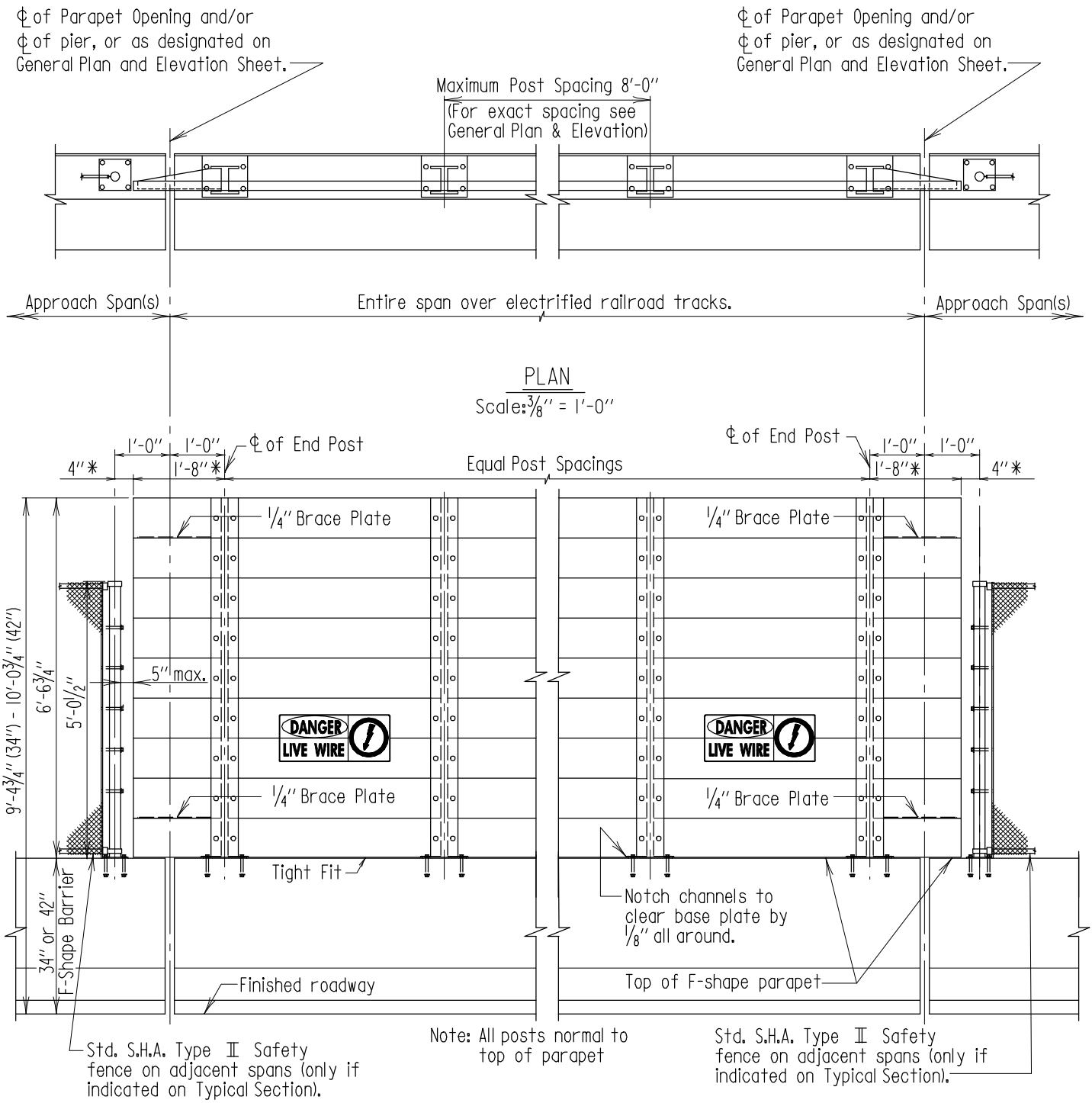

INSIDE - ELEVATION

Scale: 3/8" = 1'-0"

Note:

1. All shapes and plates (except anchor plates) to be aluminum Designation 6061-T6. Welding of aluminum elements shall follow AWS D1.2.
2. Material for anchor studs shall conform to A.S.T.M. Designation: A-276, Type 430 or Type 304 Stainless Steel, annealed, hot-finished, ultimate strength 70,000 p.s.i. min. 20% min. elongation. Threads to be rolled and not cut.
3. Material for anchor plates shall be steel conforming to A.S.T.M. Designation: A-36 epoxy coated.
4. All hardware not specifically called for on any detail shall be stainless steel A.S.T.M. A-304.

* For both spans fixed at this support; for expansion increase 4" dimension and reduce 1'-8" dimension as necessary. (Maximum clear opening 5").

APPROVAL	
E.S. Freedman DIRECTOR OFFICE OF STRUCTURES	
DATE: 9/15/77	
REVISIONS	
SHA	FHWA
12-15-82	11-29-85
6-7-88	6-8-90
10-26-01	
3-4-04	

FHWA APPROVAL
DATE: 9-15-77

STATE OF MARYLAND
DEPARTMENT OF TRANSPORTATION
STATE HIGHWAY ADMINISTRATION
OFFICE OF STRUCTURES

PROTECTIVE BARRIER FOR PORTION OF BRIDGE OVER ELECTRIFIED RAILROAD WITH F-SHAPE PARAPET

STANDARD NO. SUP-FR(RR)-101 SHEET 1 OF 4

SUPER FENCE/RAILING

OLD NO. BR-SS(5.02)-76-55

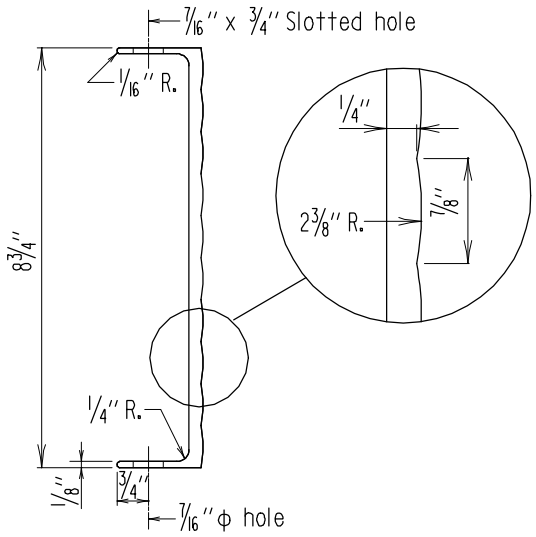

CHANNEL SECTION

Scale: 3" = 1'-0"

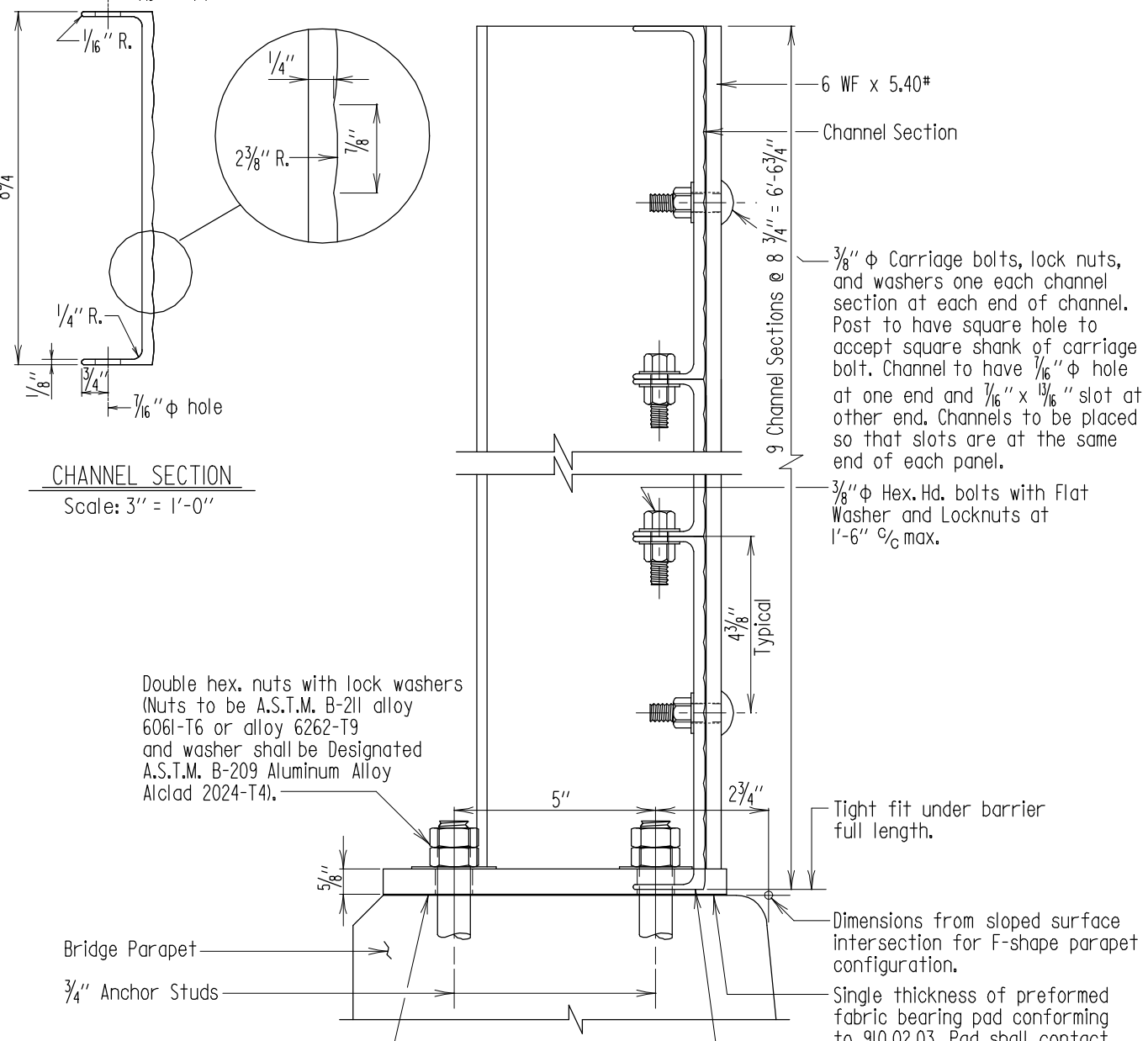

TYPICAL SECTION AT POST

Scale: 3" = 1'-0"

APPROVAL	
E.S. Freedman DIRECTOR OFFICE OF STRUCTURES	
DATE: 8/1/77	
REVISIONS	
SHA	FHWA
3-4-04	
10-9-07	
5-13-13	

FHWA APPROVAL
DATE: 7-21-77

STATE OF MARYLAND
DEPARTMENT OF TRANSPORTATION
STATE HIGHWAY ADMINISTRATION
OFFICE OF STRUCTURES

PROTECTIVE BARRIER FOR PORTION OF BRIDGE OVER ELECTRIFIED RAILROAD WITH F-SHAPE PARAPET

STANDARD NO. SUP-FR(RR)-101 SHEET 2 OF 4

SUPER FENCE/RAILING

OLD NO. BR-SS(5.02)-76-55

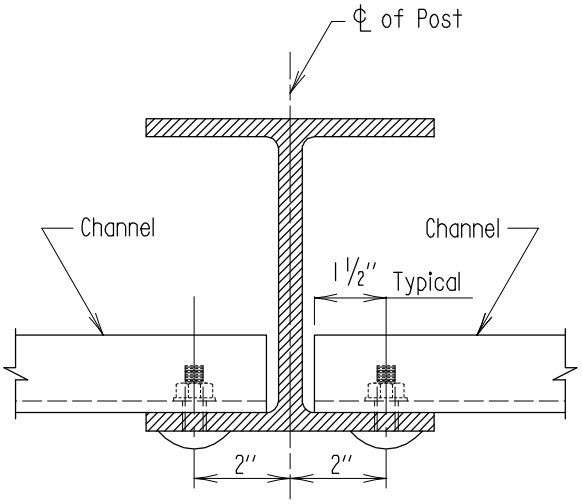

INTERMEDIATE POST CONNECTION

Scale: 3" = 1'-0"

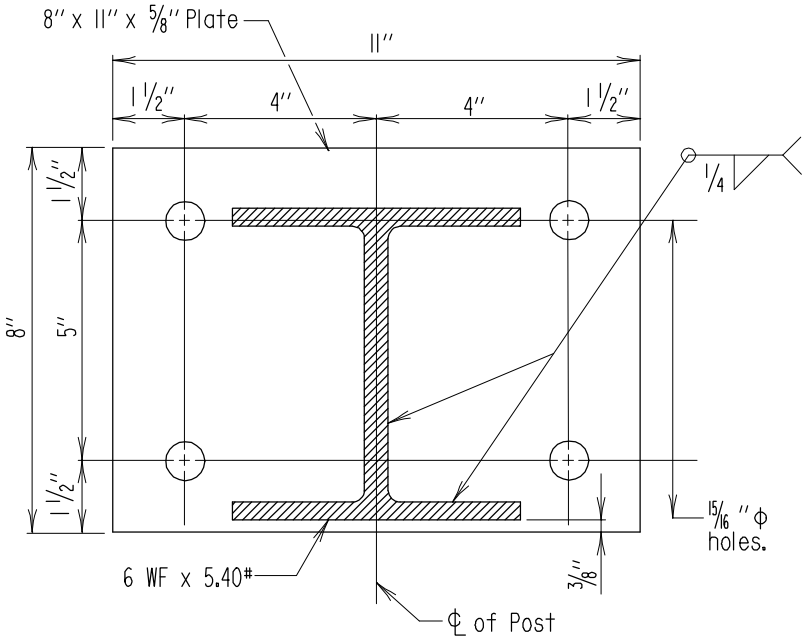

BASE PLATE DETAIL

Scale: 3" = 1'-0"

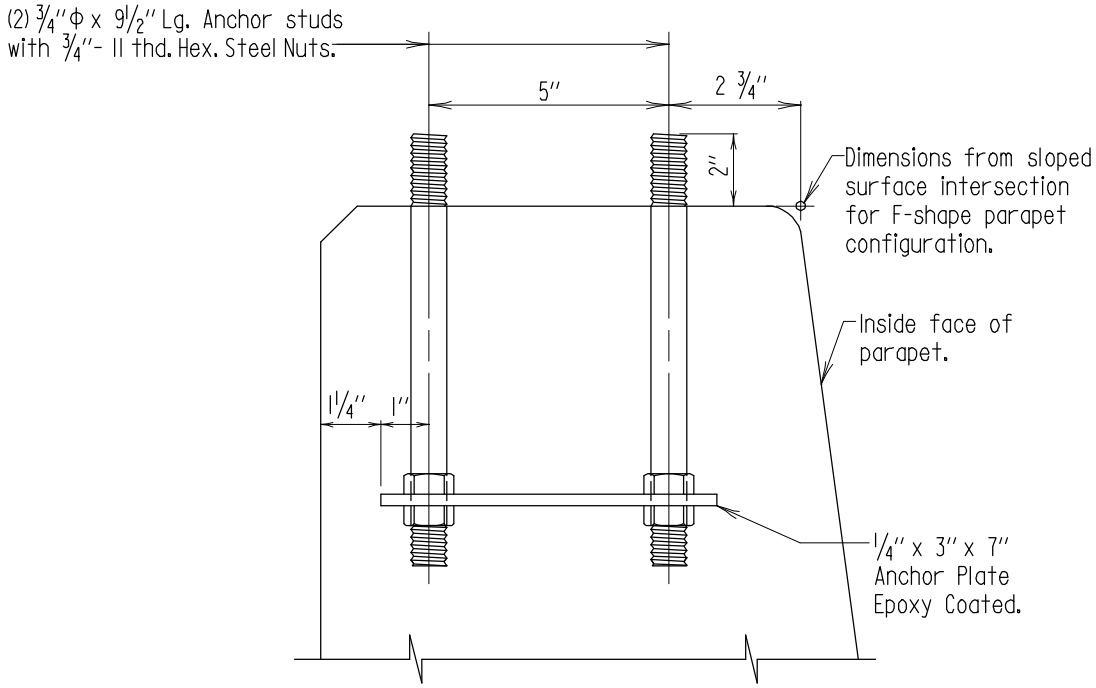

ANCHORAGE DETAIL

Scale: 3" = 1'-0"

APPROVAL		
E.S. Freedman DIRECTOR OFFICE OF STRUCTURES DATE: 8/1/77		
REVISIONS		
SHA	FHWA	
3-4-04		
10-9-07		
5-13-13		
FHWA APPROVAL DATE: 6-8-90		

STATE OF MARYLAND
DEPARTMENT OF TRANSPORTATION
STATE HIGHWAY ADMINISTRATION
OFFICE OF STRUCTURES

PROTECTIVE BARRIER FOR PORTION OF BRIDGE OVER ELECTRIFIED RAILROAD WITH F-SHAPE PARAPET

STANDARD NO. SUP-FR(RR)-101 SHEET 3 OF 4

SUPER FENCE/RAILING

OLD NO. BR-SS(5.02)-76-55

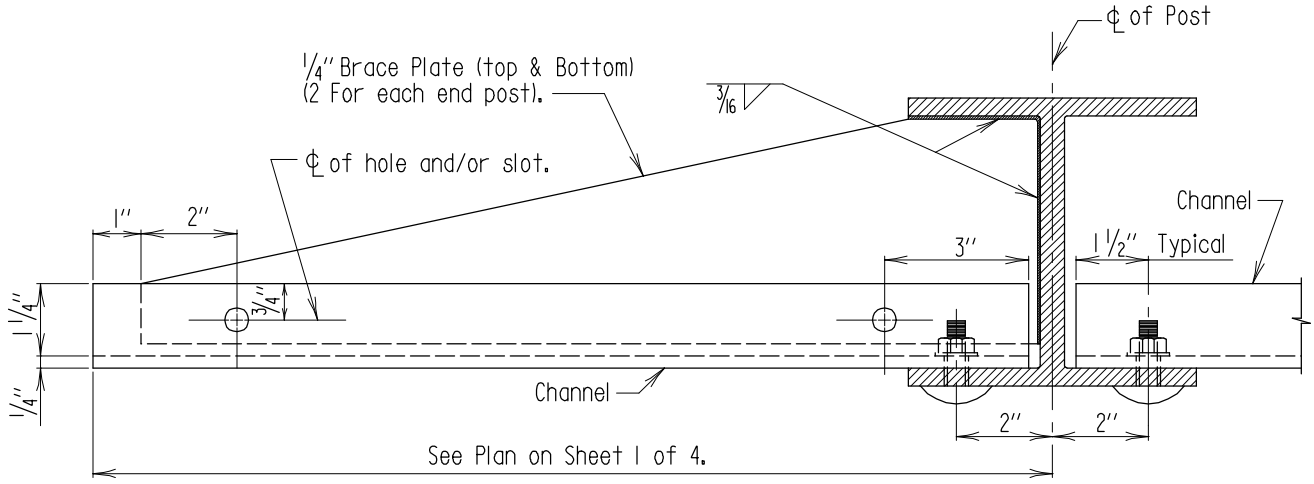

END POST CONNECTIONS

Scale: 3" = 1'-0"

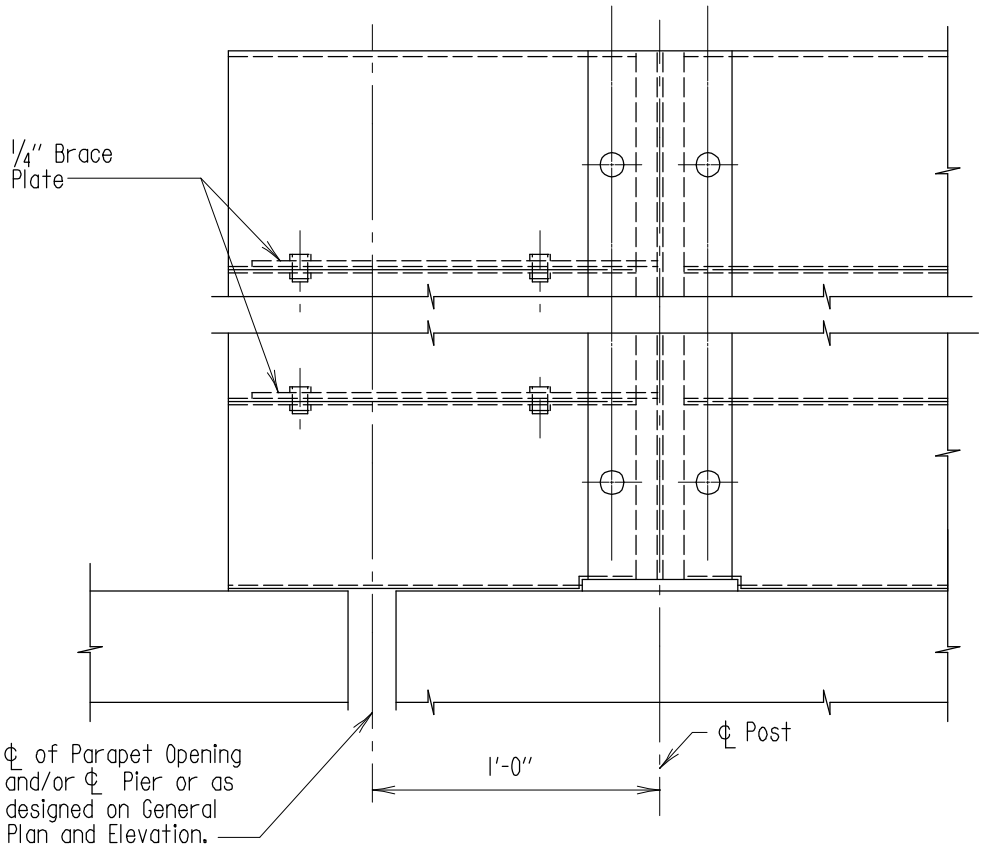

END POST ELEVATION

Scale: 3" = 1'-0"

APPROVAL	
E.S. Freedman DIRECTOR OFFICE OF STRUCTURES	
DATE: 8/1/77	
REVISIONS	
SHA	FHWA
6-8-90	6-8-90
10-26-01	
3-4-04	

FHWA APPROVAL	
DATE: 7-21-77	

STATE OF MARYLAND
DEPARTMENT OF TRANSPORTATION
STATE HIGHWAY ADMINISTRATION
OFFICE OF STRUCTURES

PROTECTIVE BARRIER FOR PORTION FOR
BRIDGE OVER ELECTRIFIED RAILROAD
WITH F-SHAPE PARAPET

STANDARD NO. SUP-FR(RR)-101 SHEET 4 OF 4

SUPER FENCE/RAILING

OLD NO. BR-SS(5.02)-76-55

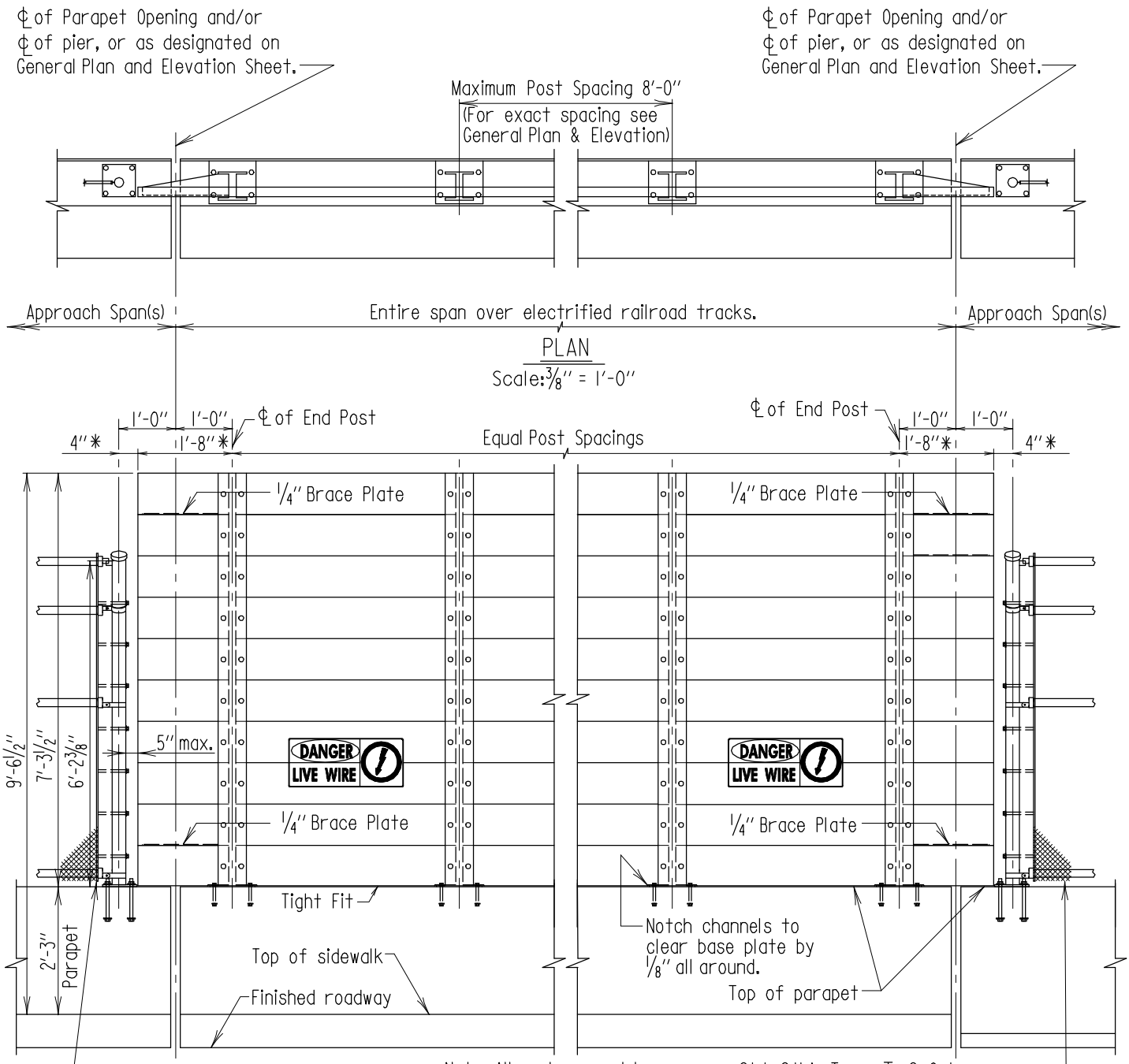

Note:

1. All shapes and plates (except anchor plates) to be aluminum Designation 6061-T6. Welding of aluminum elements shall follow AWS D1.2.
2. Material for anchor studs shall conform to A.S.T.M. Designation: A-276, Type 430 or Type 304 Stainless Steel, annealed, hot-finished, ultimate strength 70,000 p.s.i. min. 20% min. elongation. Threads to be rolled and not cut.
3. Material for anchor plates shall be steel conforming to A.S.T.M. Designation: A-36 epoxy coated.
4. All hardware not specifically called for on any detail shall be stainless steel A.S.T.M. A-304.

APPROVAL	
E.S. Freedman DIRECTOR OFFICE OF STRUCTURES	
DATE: 3/2/04	
REVISIONS	
SHA	FHWA
FHWA APPROVAL	
DATE:	

STATE OF MARYLAND
DEPARTMENT OF TRANSPORTATION
STATE HIGHWAY ADMINISTRATION
OFFICE OF STRUCTURES

PROTECTIVE BARRIER FOR PORTION OF
BRIDGE OVER ELECTRIFIED RAILROAD WITH SIDEWALK

STANDARD NO. SUP-FR(RR)-102 SHEET 1 OF 4

SUPER FENCE/RAILING

OLD NO. BR-SS(5.06)-04-360

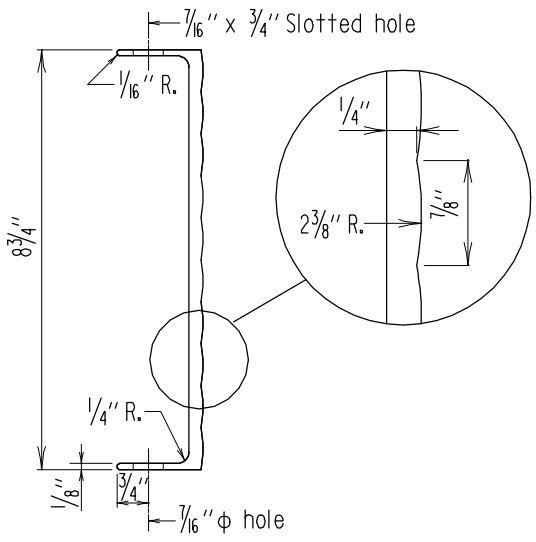

CHANNEL SECTION

Scale: 3" = 1'-0"

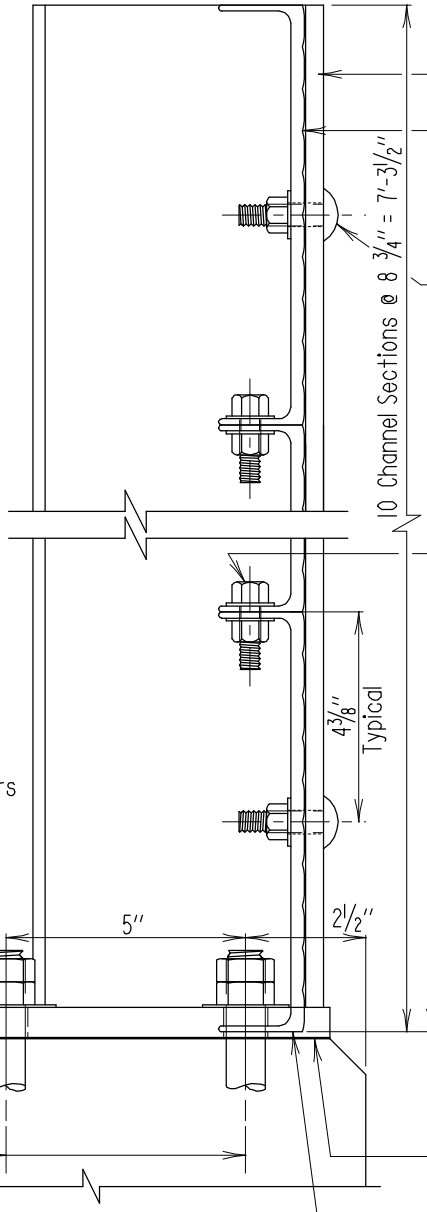

TYPICAL SECTION AT POST

Scale: 3" = 1'-0"

APPROVAL	
E.S. Freedman DIRECTOR OFFICE OF STRUCTURES	
DATE: 3/2/04	
REVISIONS	
SHA	FHWA
10-9-07	
4-15-11	
FHWA APPROVAL	
DATE:	

STATE OF MARYLAND
DEPARTMENT OF TRANSPORTATION
STATE HIGHWAY ADMINISTRATION
OFFICE OF STRUCTURES

PROTECTIVE BARRIER FOR PORTION OF BRIDGE OVER ELECTRIFIED RAILROAD WITH SIDEWALK

STANDARD NO. SUP-FR(RR)-102 SHEET 2 OF 4

SUPER FENCE/RAILING

OLD NO. BR-SS(5.06)-04-360

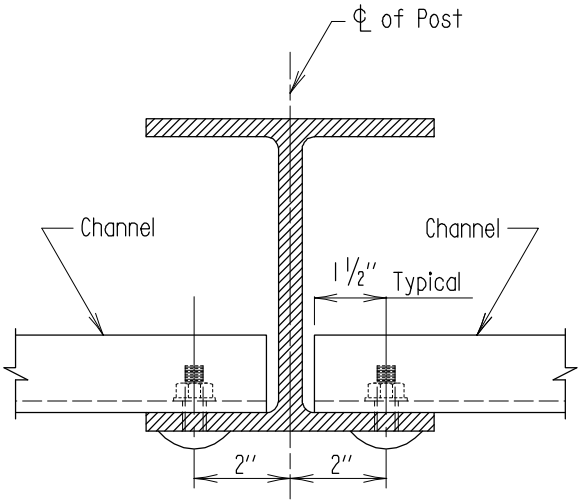

INTERMEDIATE POST CONNECTION

Scale: 3" = 1'-0"

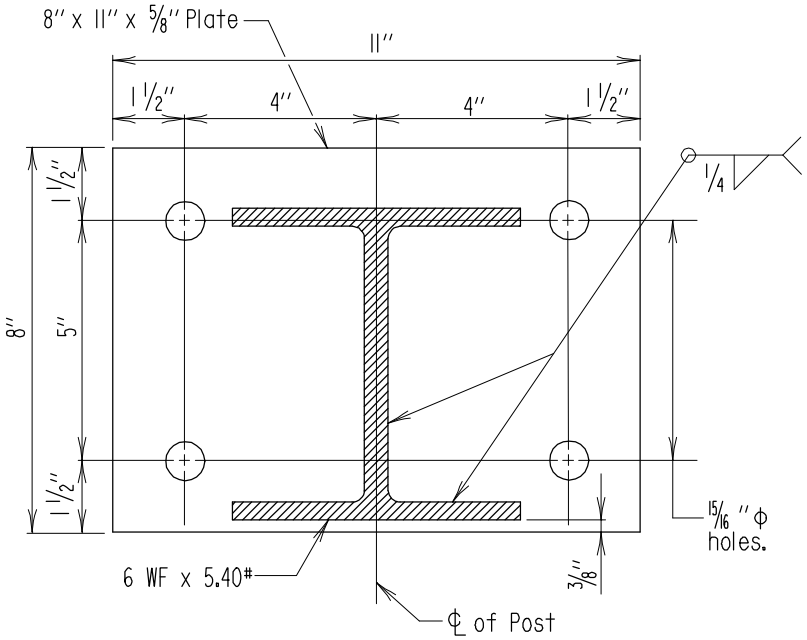

BASE PLATE DETAIL

Scale: 3" = 1'-0"

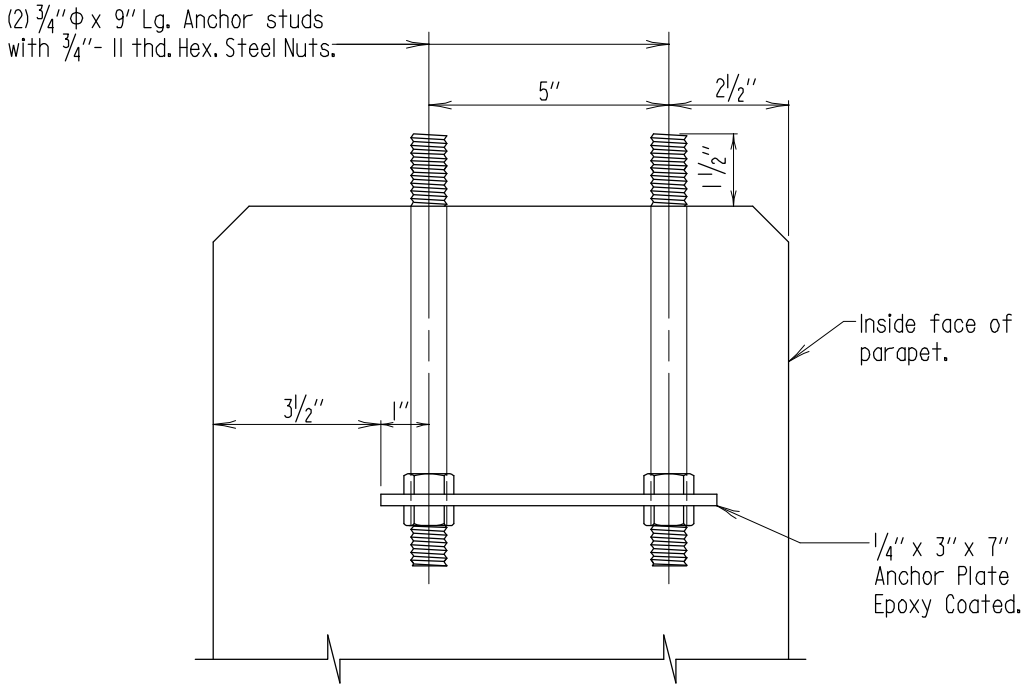

ANCHORAGE DETAIL

Scale: 3" = 1'-0"

APPROVAL		
E.S. Freedman DIRECTOR OFFICE OF STRUCTURES DATE: 3/2/04		
REVISIONS		
SHA	FHWA	
10-9-07		
FHWA APPROVAL		
DATE:		

STATE OF MARYLAND
DEPARTMENT OF TRANSPORTATION
STATE HIGHWAY ADMINISTRATION
OFFICE OF STRUCTURES

PROTECTIVE BARRIER FOR PORTION OF
BRIDGE OVER ELECTRIFIED RAILROAD WITH SIDEWALK

STANDARD NO. SUP-FR(RR)-102 SHEET 3 OF 4

SUPER FENCE/RAILING

OLD NO. BR-SS(5.06)-04-360

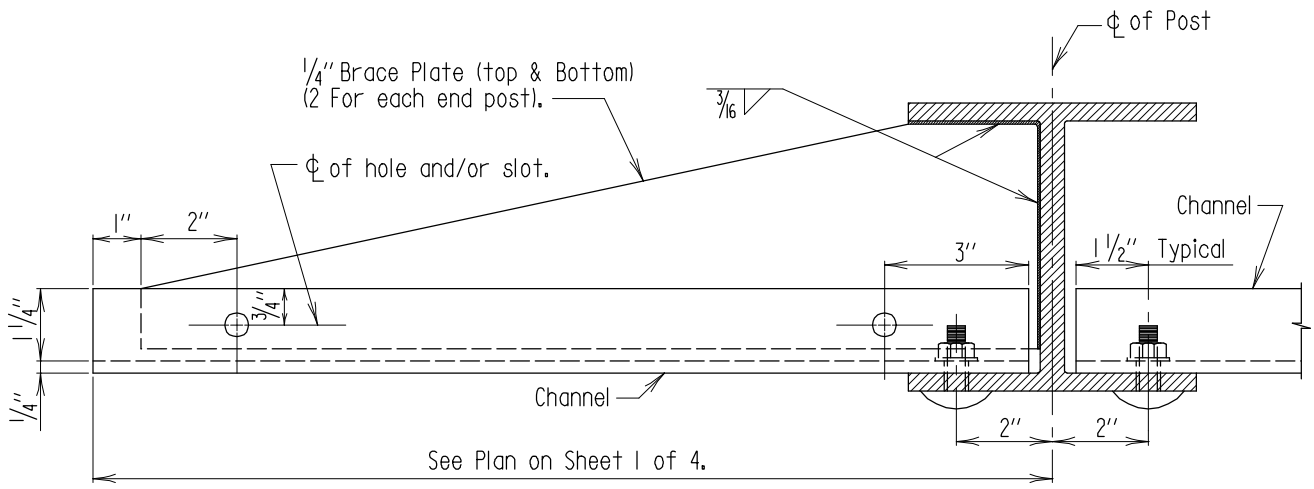

END POST CONNECTIONS

Scale: 3" = 1'-0"

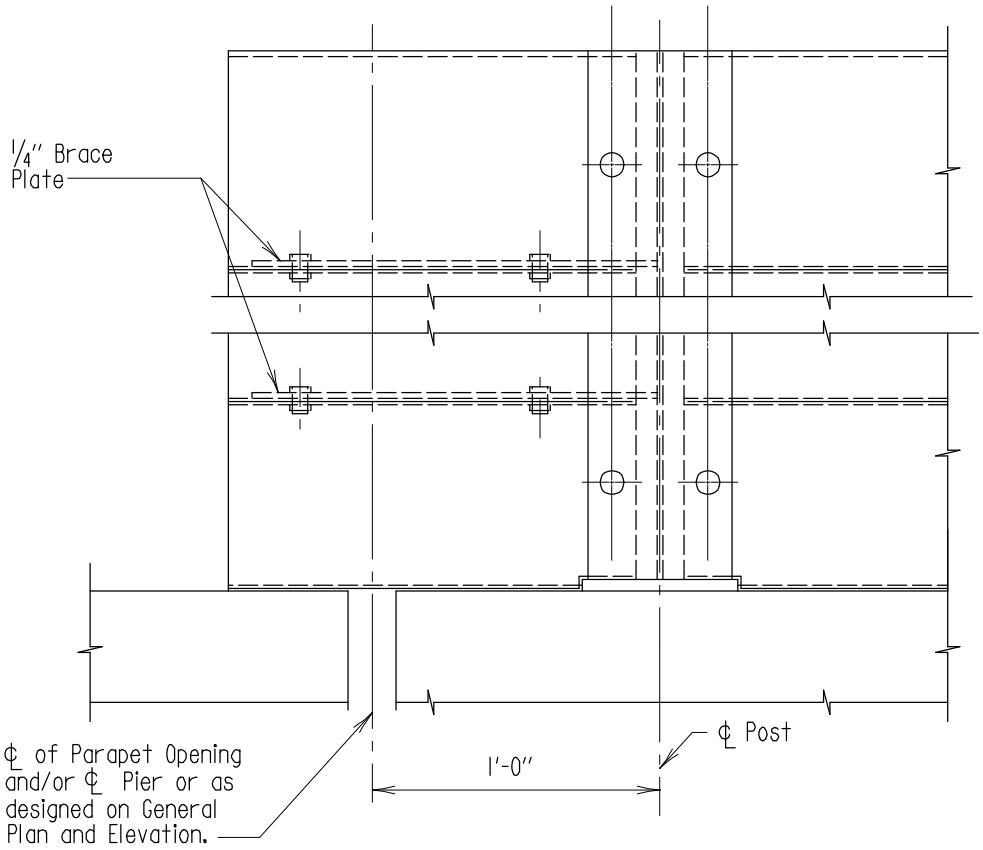

END POST ELEVATION

Scale: 3" = 1'-0"

APPROVAL	
E.S. Freedman DIRECTOR OFFICE OF STRUCTURES DATE: 3/2/04	
REVISIONS	
SHA	FHWA

FHWA APPROVAL
DATE:

STATE OF MARYLAND
DEPARTMENT OF TRANSPORTATION
STATE HIGHWAY ADMINISTRATION
OFFICE OF STRUCTURES

PROTECTIVE BARRIER FOR PORTION FOR
BRIDGE OVER ELECTRIFIED RAILROAD WITH SIDEWALK

STANDARD NO. SUP-FR(RR)-102 SHEET 4 OF 4

SUPER FENCE/RAILING

OLD NO. BR-SS(5.06)-04-360

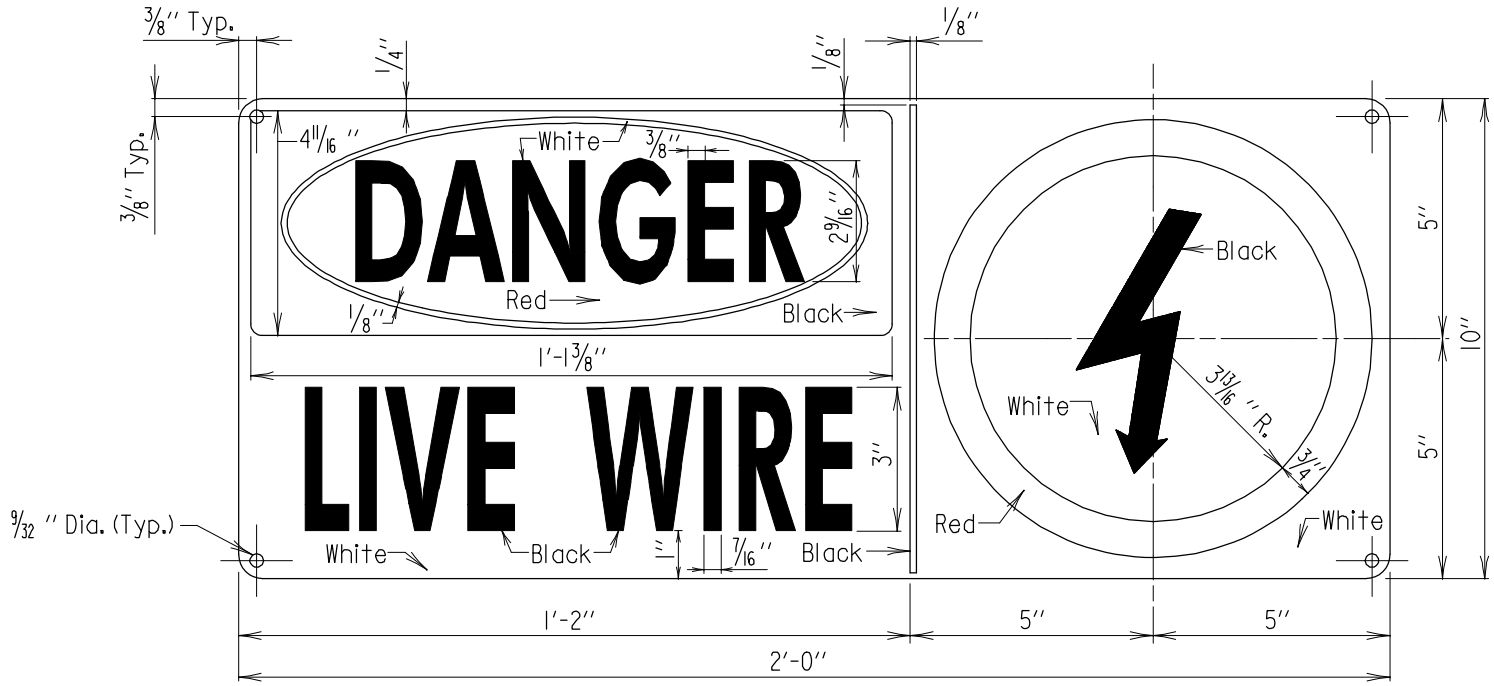

PLAN

Scale: 3" = 1'-0"

Notes:

1. Sign to be made of 0.04 thick aluminum, rounded corners.
2. Solvent-clean and pretreat all surfaces with a wash primer conforming to MIL-C-15328. Follow with a zinc primer meeting Federal Specification TT-P-1757 or TT-P-645. Finish coat may be and oil, alkyd, vinyl or epoxy paint that does not contain lead in its pigment.
3. Letters to be on front only. Size to be as shown.
4. Back of sign to be mill finish.
5. Holes to be provided with nickeled brass eyelets to permit securing of signs with 1/4"ϕ x 3/4" Lg. Stainless Steel Hex. Hd. cap screws, washers and locknuts. Burr threads after installation (where applicable). If attached to concrete suitable anchor insert shall be used.
6. Signs on protective barrier to be fastened 5'-0" above area adjacent to the parapet.
7. Cost of furnishing and installing the signs to be included in the price for Protective Barrier.

STATE OF MARYLAND
DEPARTMENT OF TRANSPORTATION
STATE HIGHWAY ADMINISTRATION
OFFICE OF STRUCTURES

ELECTRIFIED TERRITORY
DANGER SIGN

APPROVAL
DIRECTOR
OFFICE OF STRUCTURES
DATE: 1/11/83

REVISIONS
SHA 1-22-01
FHWA

FHWA APPROVAL
DATE: 11-29-85

STANDARD NO. SUP-FR(RR)-201

SHEET 1 OF 2

OLD NO. BR-SS(5.04)-82-141

SUPER FENCE/RAILING

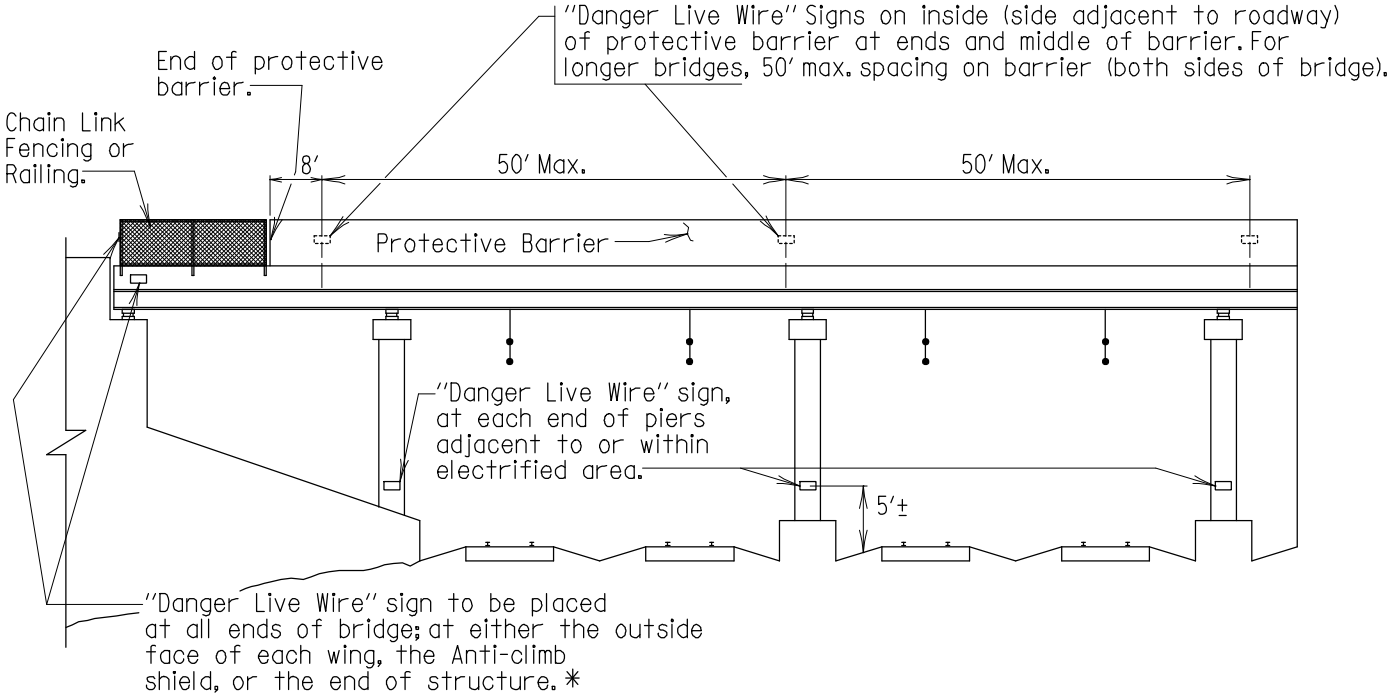

OVERHEAD BRIDGES

Scale: None

* Where structure is of multispan configuration and end of bridge is a considerable distance from electrified areas (over 200' from electrified span) additional signs shall be placed in spans just adjacent to electrified span(s).

APPROVAL	
R.S. Freedman DIRECTOR OFFICE OF STRUCTURES DATE: 1/11/83	
REVISIONS	
SHA	FHWA

FHWA APPROVAL	
DATE: 11-29-85	

STATE OF MARYLAND
DEPARTMENT OF TRANSPORTATION
STATE HIGHWAY ADMINISTRATION
OFFICE OF STRUCTURES

ELECTRIFIED TERRITORY
DANGER SIGN

STANDARD NO. SUP-FR(RR)-201 SHEET 2 OF 2

SUPER FENCE/RAILING

OLD NO. BR-SS(5.04)-82-141

SUPERSTRUCTURE

STRUCTURAL STEEL

(SUP-SS)

SUPERSTRUCTURE

STRUCTURAL STEEL

GENERAL

(SUP-SS(GEN))

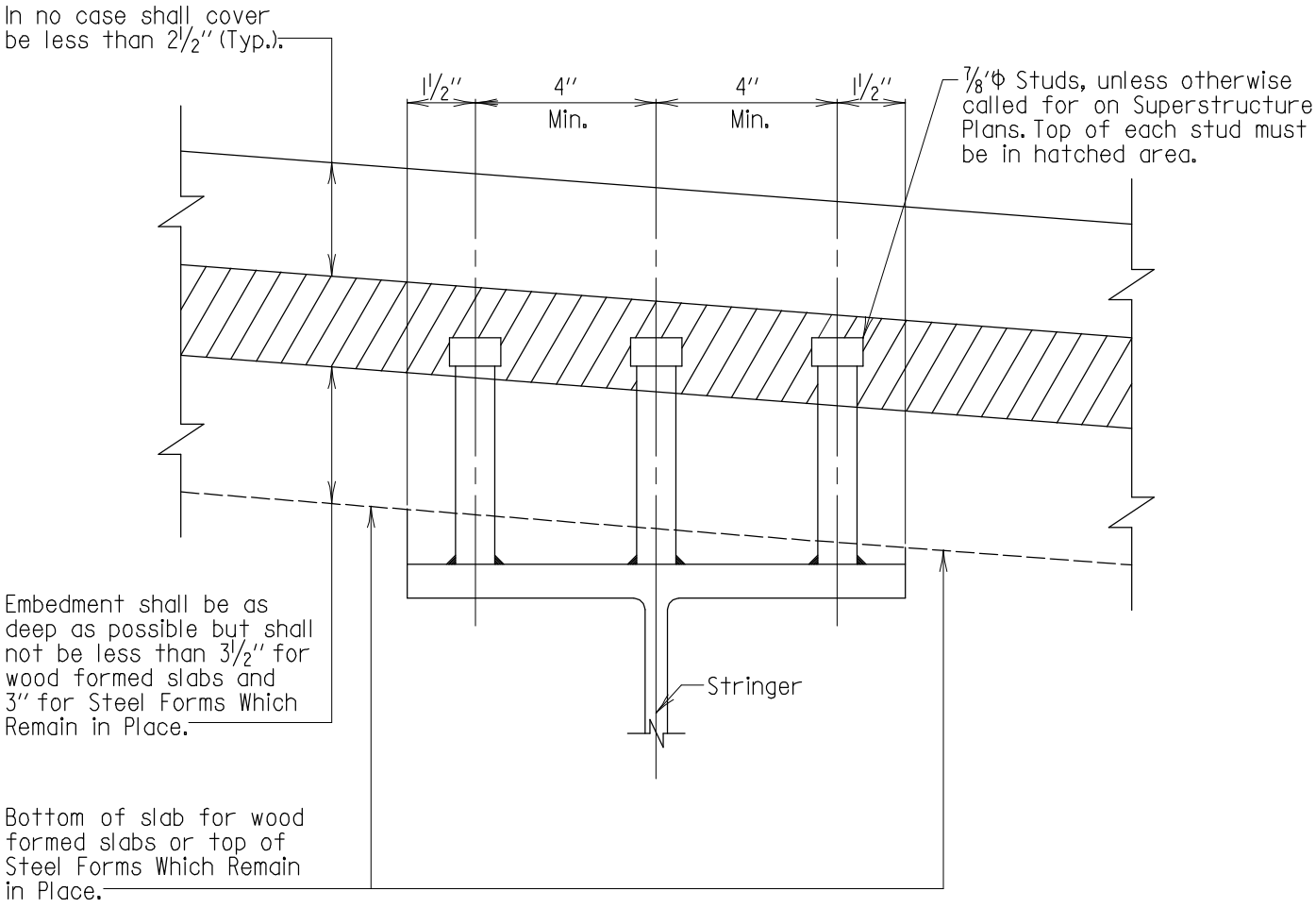

ELEVATION

Scale: None

Notes:

1. For number of studs per row, and longitudinal spacing of rows see pertinent Superstructure sheets.
2. For flange widths less than 11", only two rows of studs are to be used.
3. Steel Forms Which Remain in Place not shown.

APPROVAL	
R.S. Freedman DIRECTOR OFFICE OF STRUCTURES	
DATE: 9/8/76	
REVISIONS	
SHA	FHWA

FHWA APPROVAL
DATE: 11-9-76

STATE OF MARYLAND
DEPARTMENT OF TRANSPORTATION
STATE HIGHWAY ADMINISTRATION
OFFICE OF STRUCTURES

STEEL STUD SHEAR
DEVELOPER EMBEDMENT DETAIL

STANDARD NO. SUP-SS(GEN)-101 SHEET 1 OF 1

SUPERSTRUCTURE STEEL

OLD NO. BR-SS(8.05)-75-30

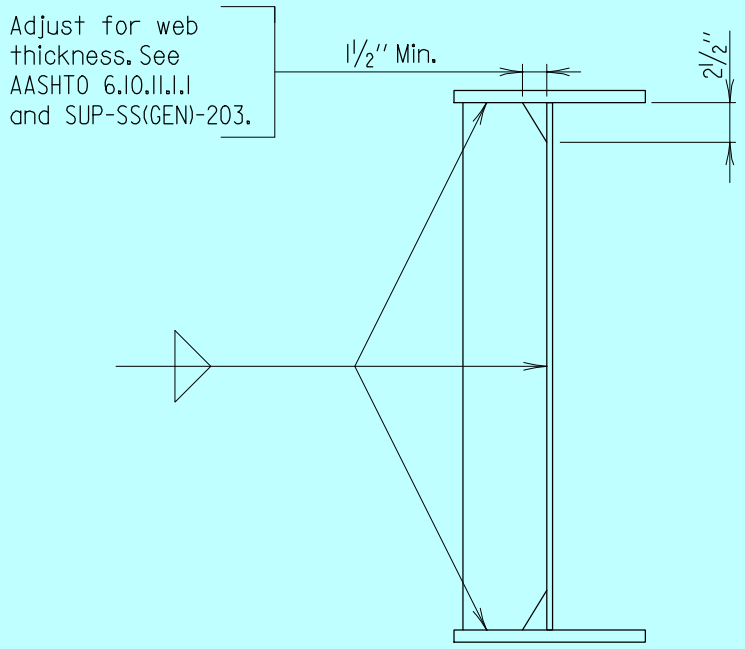

INTERMEDIATE STIFFENERS - ANGLE CLIPS

Scale: 1" = 1'-0"

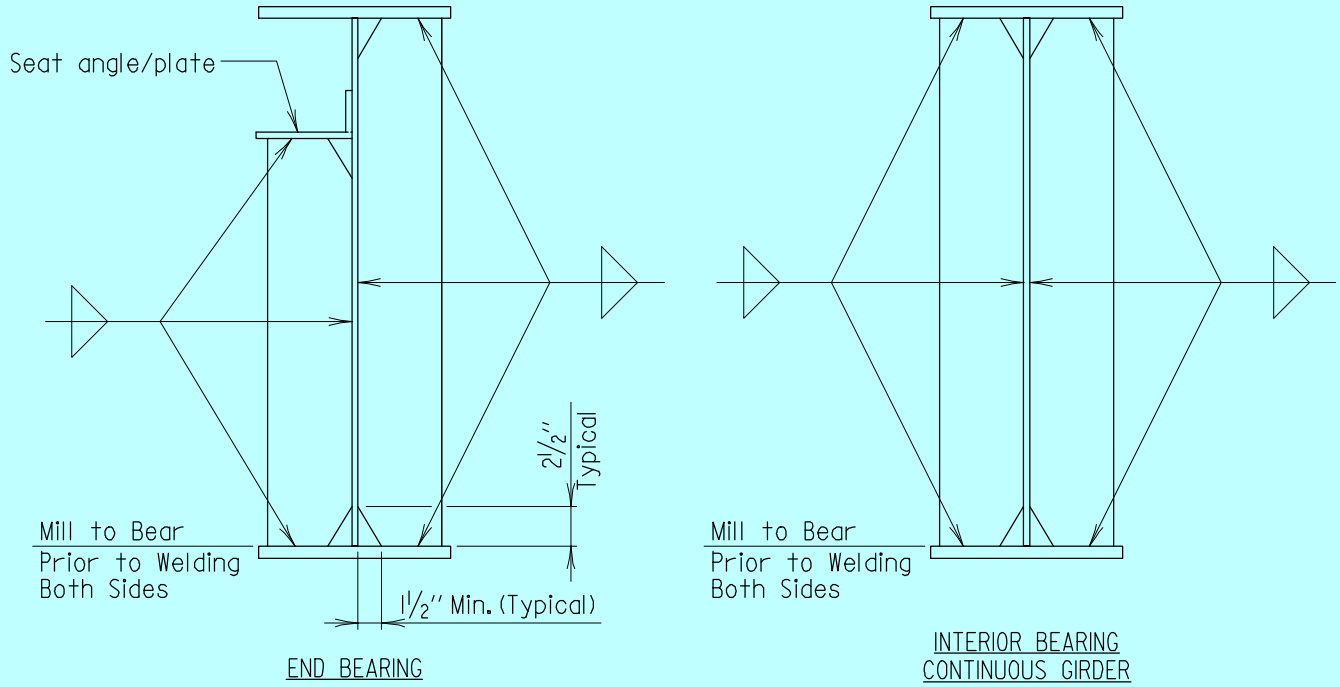

END BEARING

INTERIOR BEARING CONTINUOUS GIRDER

BEARING STIFFENERS - ANGLE CLIPS

Scale: 1" = 1'-0"

Notes:

1. Minimum stiffener thickness ½".
2. On exterior girders place all intermediate stiffeners on inside of girder.
3. When longitudinal stiffeners are required, place all longitudinal stiffeners on one side of web, place transverse stiffeners on opposite side.
4. Minimum fillet weld is 5/16".

* FOR OFFICE USE ONLY *

APPROVAL	
E.S. Freedman DIRECTOR OFFICE OF STRUCTURES DATE: 4/12/78	
REVISIONS	
SHA	FHWA
10-25-88	
2-14-00	
10-22-03	
10-9-07	

FHWA APPROVAL DATE: 10-17-78

STATE OF MARYLAND
DEPARTMENT OF TRANSPORTATION
STATE HIGHWAY ADMINISTRATION
OFFICE OF STRUCTURES

VERIFIED 10-9-2007 LRFD

STIFFENER ATTACHMENT DETAILS FOR STEEL GIRDERS ANGLE CLIP

STANDARD NO. SUP-SS(GEN)-201 SHEET 1 OF 2

SUPER-STRUCT. STEEL

OLD NO. BR-SS(8.07)-78-73(L)

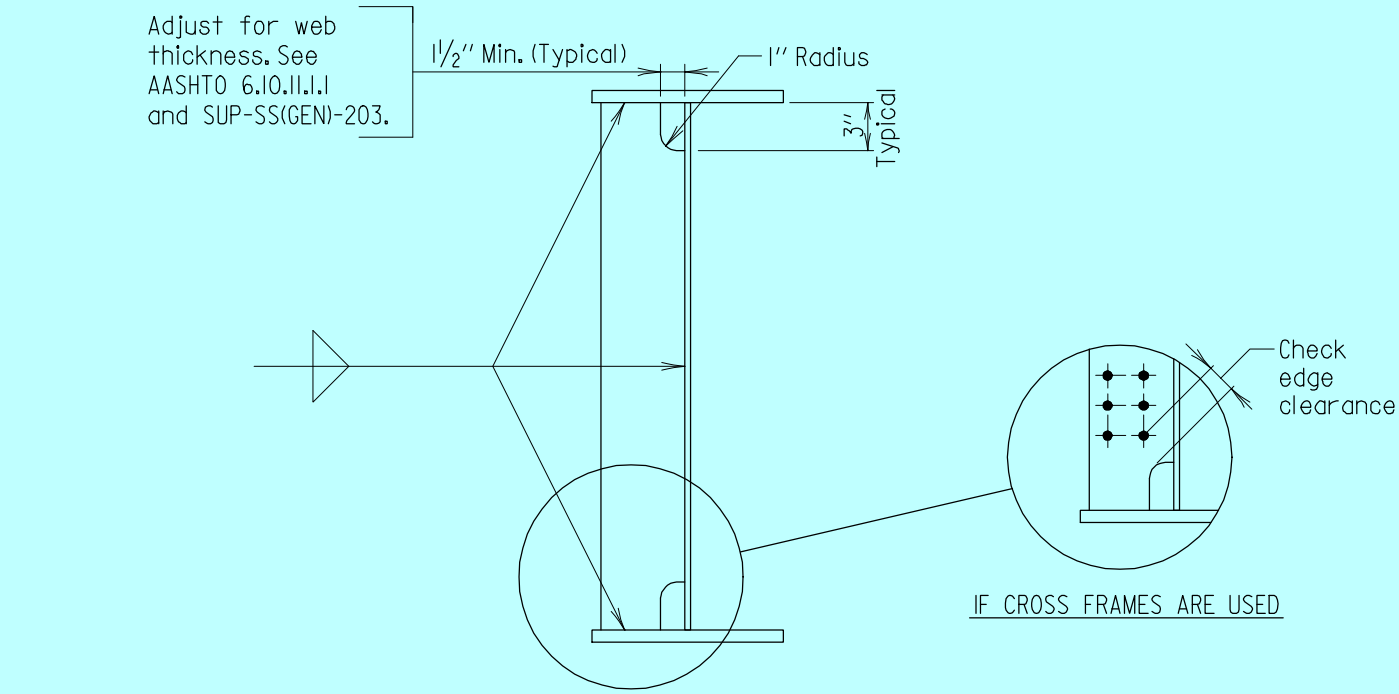

INTERMEDIATE STIFFENERS - RADIUS CLIPS

Scale: 1" = 1'-0"

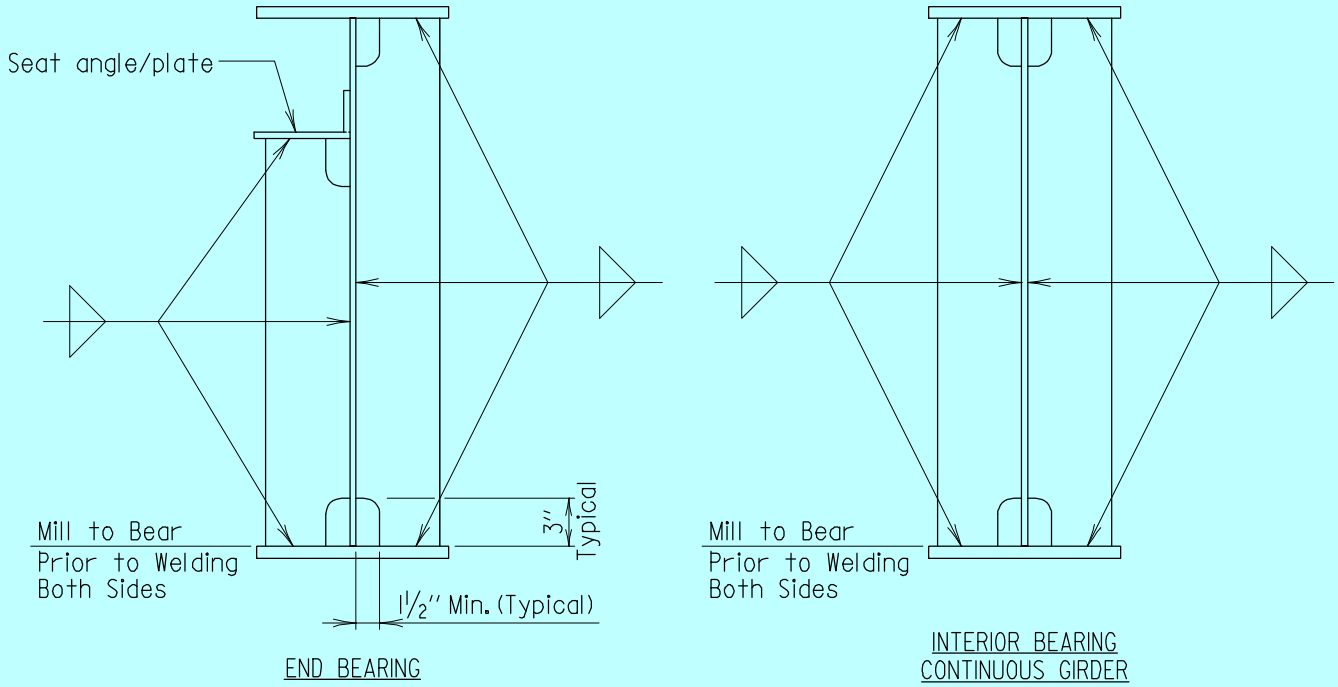

BEARING STIFFENERS - RADIUS CLIPS

Scale: 1" = 1'-0"

Notes:

1. Minimum stiffener thickness ½".
2. On exterior girders place all intermediate stiffeners on inside of girder.
3. When longitudinal stiffeners are required, place all longitudinal stiffeners on one side of web, place transverse stiffeners on opposite side.
4. Minimum fillet weld is 5/16".

* FOR OFFICE USE ONLY *

APPROVAL	
E.S. Freedman DIRECTOR OFFICE OF STRUCTURES	
DATE: 10/22/03	
REVISIONS	
SHA	FHWA
10-9-07	

FHWA APPROVAL
DATE:

STATE OF MARYLAND
DEPARTMENT OF TRANSPORTATION
STATE HIGHWAY ADMINISTRATION
OFFICE OF STRUCTURES

VERIFIED 10-9-2007 LRFD

STIFFENER ATTACHMENT DETAILS
WITH OPTIONAL RADIUS CLIPS FOR STEEL GIRDERS

STANDARD NO. SUP-SS(GEN)-201 SHEET 2 OF 2

SUPERSTRUCTURE STEEL

OLD NO. BR-SS(8.07)-78-73(L)

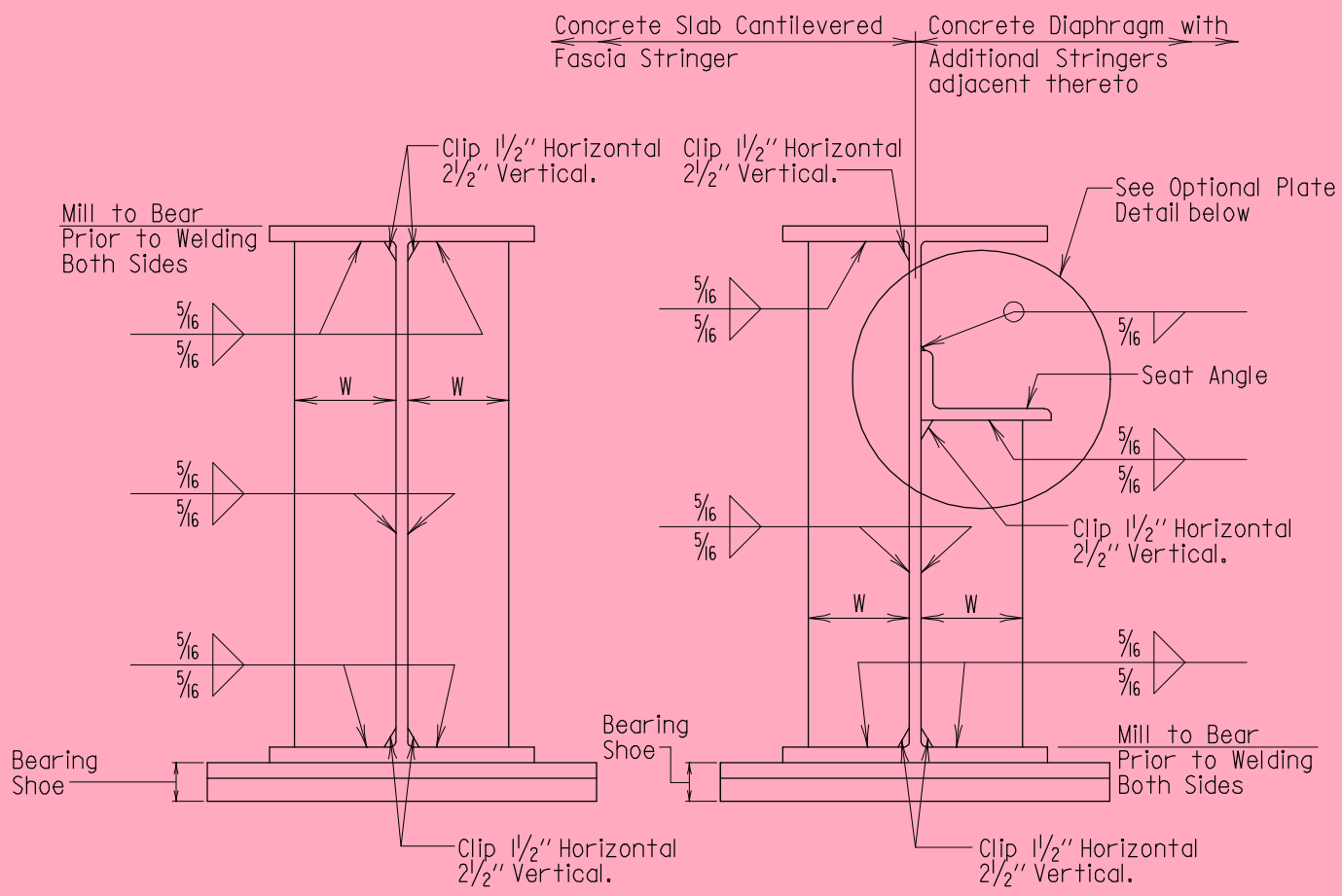

AT PIERS
(WHERE STRINGER IS
CONTINUOUS OVER SUPPORT)
Scale: ½" = 1'-0"

AT PIERS
(WHERE STRINGER IS NOT
CONTINUOUS OVER SUPPORT) AND
AT ABUTMENTS
Scale: ½" = 1'-0"

Location	W= Stiffener Width	Stiffener Thickness
Abutment		
Pier		
Pier		
Pier		
Abutment		

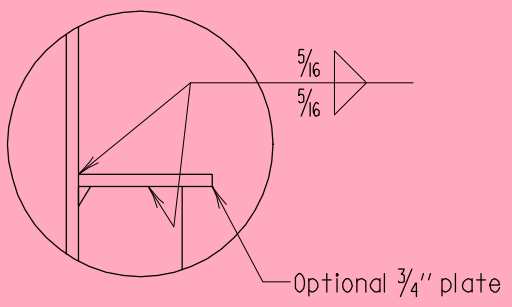

OPTIONAL SEAT PLATE DETAIL

Slanted lettering indicates notes "For Office Use Only".
Stiffener width to thickness ratio : 10 or less.
Width of stiffener: To nearest ½" about ½" less than distance from face of web to edge of flange.

APPROVAL
E.S. Freedman DIRECTOR OFFICE OF STRUCTURES
DATE: 6/2/80

REVISIONS	
SHA	FHWA
10-27-92	
1-28-94	
2-14-00	
10-22-03	

FHWA APPROVAL
DATE: 7-29-80

STATE OF MARYLAND
DEPARTMENT OF TRANSPORTATION
STATE HIGHWAY ADMINISTRATION
OFFICE OF STRUCTURES

BEARING STIFFENERS FOR ROLLED STEEL BEAMS
ANGLE CLIP

STANDARD NO. SUP-SS(GEN)-202 SHEET 1 OF 2

SUPERSTRUCTURE STEEL

OLD NO. BR-SS(8.08)-80-103

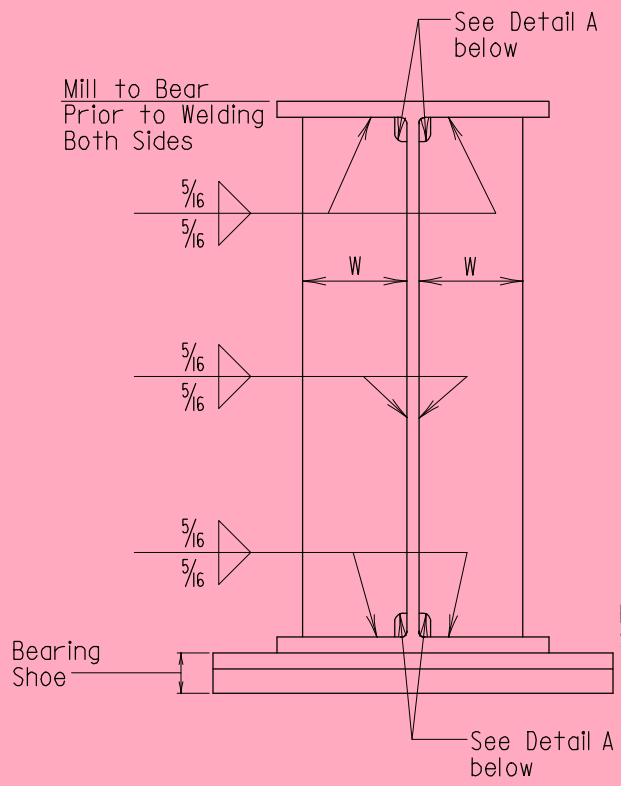

AT PIERS
(WHERE STRINGER IS
CONTINUOUS OVER SUPPORT)
Scale: 1/2" = 1'-0"

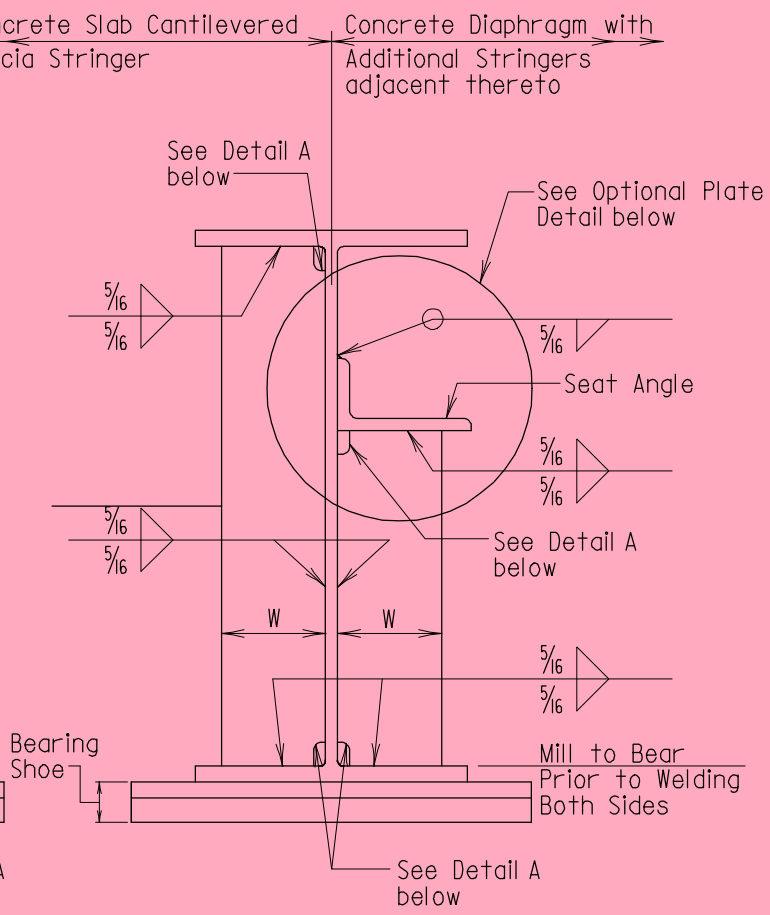

AT PIERS
(WHERE STRINGER IS NOT
CONTINUOUS OVER SUPPORT) AND
AT ABUTMENTS
Scale: 1/2" = 1'-0"

Location	W= Stiffener Width	Stiffener Thickness
Abutment		
Pier		
Pier		
Pier		
Abutment		

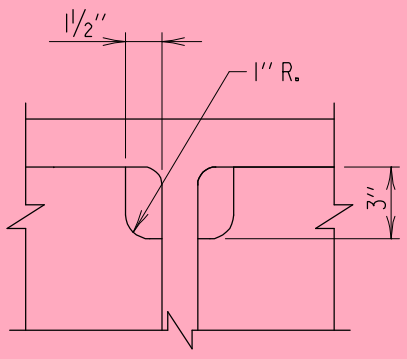

DETAIL A
Scale: 1 1/2" = 1'-0"

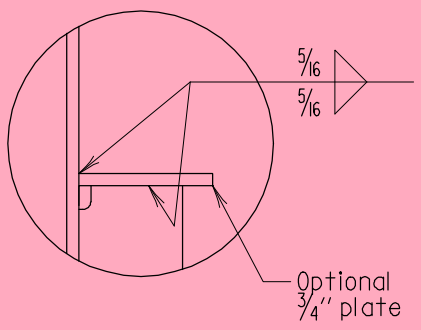

OPTIONAL SEAT PLATE DETAIL

Slanted lettering indicates notes "For Office Use Only".
Stiffener width to thickness ratio : 10 or less.
Width of stiffener: To nearest 1/2" about 1/2" less than distance from face of web to edge of flange.

APPROVAL	
E.S. Freedman DIRECTOR OFFICE OF STRUCTURES	
DATE: 10/22/03	
REVISIONS	
SHA	FHWA
12-30-03	

FHWA APPROVAL	
DATE:	

STATE OF MARYLAND
DEPARTMENT OF TRANSPORTATION
STATE HIGHWAY ADMINISTRATION
OFFICE OF STRUCTURES

BEARING STIFFENERS FOR ROLLED STEEL BEAMS
OPTIONAL RADIUS CLIP

STANDARD NO. SUP-SS(GEN)-202 SHEET 2 OF 2

SUPERSTRUCTURE STEEL

OLD NO. BR-SS(8.08)-80-103

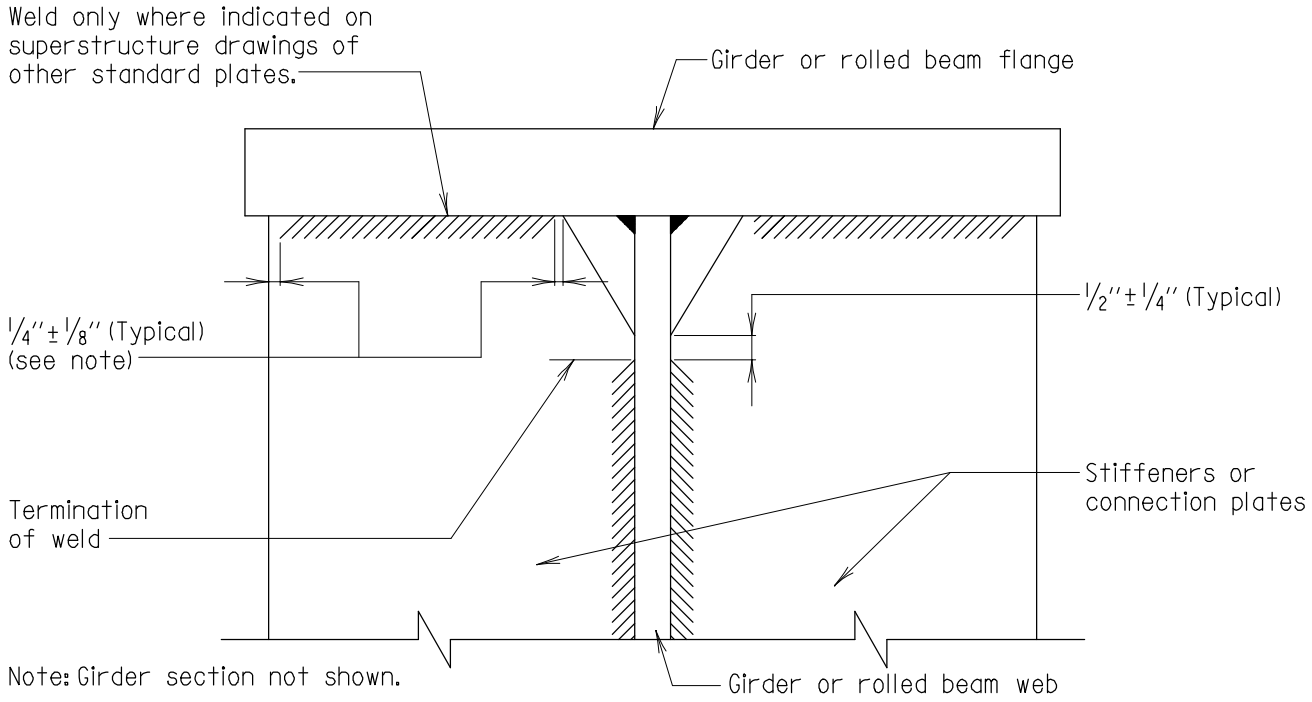

SECTION - ANGLE CLIP

Scale: 3'' = 1'-0''

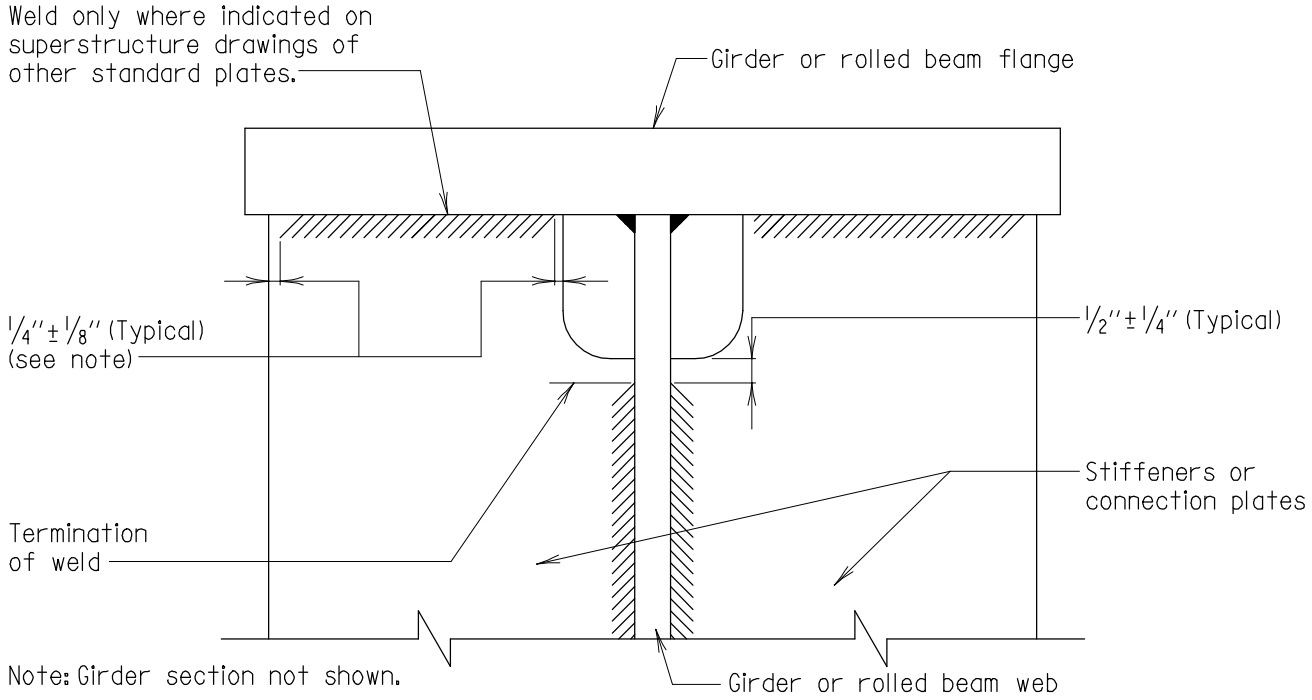

SECTION - OPTIONAL RADIUS CLIP

Scale: 3'' = 1'-0''

Notes:

1. For all stiffeners (intermediate or bearing) top and bottom, including connection plate for channel diaphragms for all girders and rolled beams.
2. Welding to flange as per this detail will only be required where plans or other standard sheets indicate stiffener is extended and welded to flange.

APPROVAL	
E.S. Freedman DIRECTOR OFFICE OF STRUCTURES	
DATE: 11/3/83	
REVISIONS	
SHA	FHWA
1-22-86	6-8-90
10-1-03	

FHWA APPROVAL	
DATE: 12-9-83	

STATE OF MARYLAND
DEPARTMENT OF TRANSPORTATION
STATE HIGHWAY ADMINISTRATION
OFFICE OF STRUCTURES

STIFFENER AND STRINGER CONNECTION PLATE WELD TERMINATION DETAIL

STANDARD NO. SUP-SS(GEN)-203 SHEET 1 OF 1

SUPERSTRUCTURE STEEL

OLD NO. BR-SS(8.10)-83-154

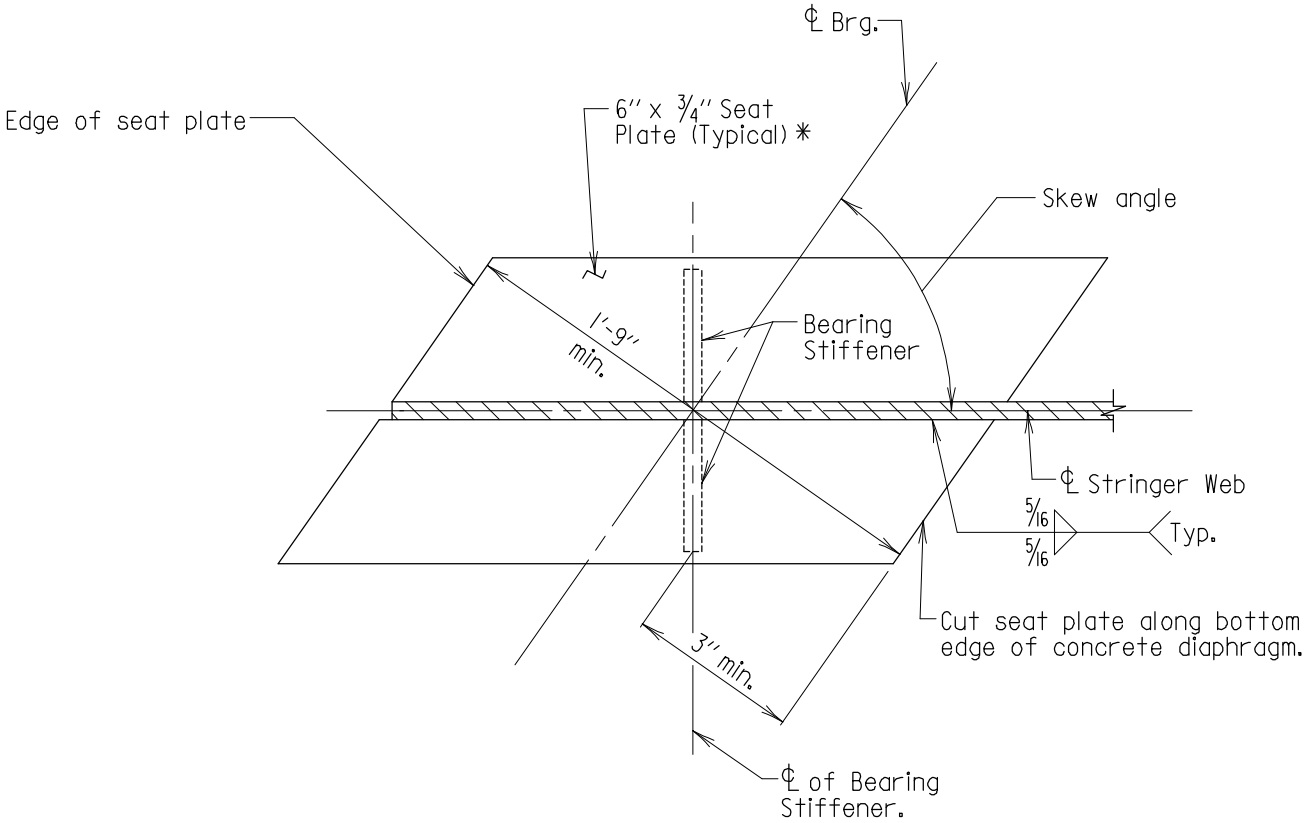

PLAN VIEW OF STRINGER BELOW TOP FLANGE

Scale: 1 1/2'' =1'-0''

* Seat plate width shall be increased as necessary so that plate exceeds stiffener width by at least 1/2''.

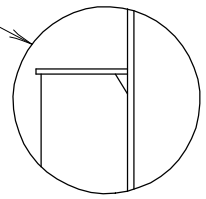

Notes:

1. Contractor has the option of using seat plates or seat angles, only one type shall be used per bridge.
2. Concrete diaphragm not shown.

APPROVAL	
R.S. Freedman DIRECTOR OFFICE OF STRUCTURES	
DATE: 2/14/00	
REVISIONS	
SHA	FHWA
11-27-12	
3-7-13	
FHWA APPROVAL	
DATE:	

STATE OF MARYLAND
DEPARTMENT OF TRANSPORTATION
STATE HIGHWAY ADMINISTRATION
OFFICE OF STRUCTURES

STEEL SEAT PLATES FOR SKEWED CONCRETE DIAPHRAGMS

STANDARD NO. SUP-SS(GEN)-204 SHEET 1 OF 2

SUPERSTRUCTURE STEEL

OLD NO. BR-SS(8.12)-85-170

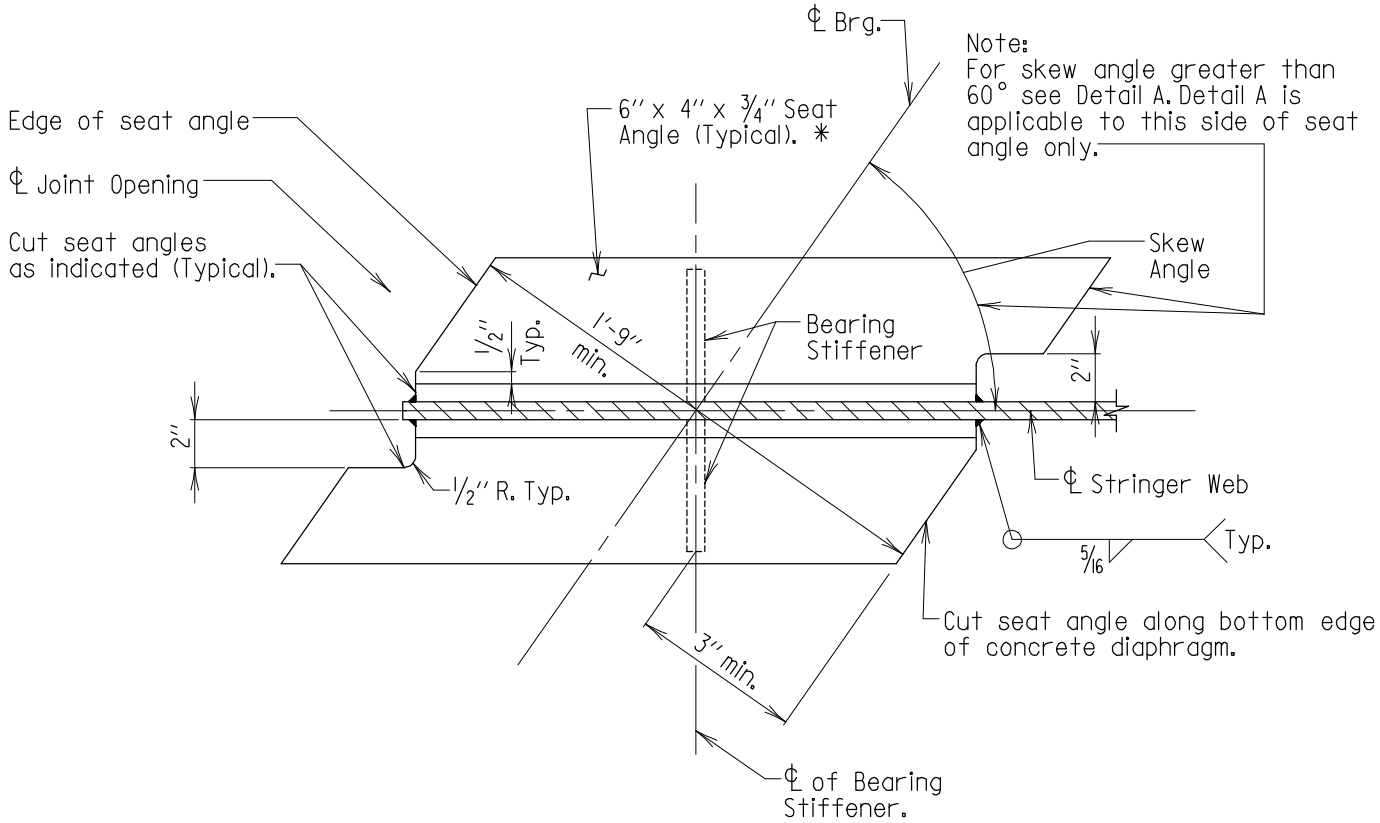

PLAN VIEW OF STRINGER BELOW TOP FLANGE

Scale: 1 1/2" = 1'-0"

* Longest leg of angle shall be increased as necessary so that angle exceeds stiffener width by at least 1/2". If angle size is not available to satisfy this requirement, stiffener shall be tapered at end to meet this requirement.

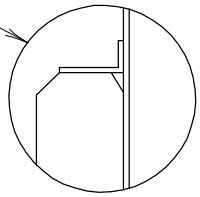

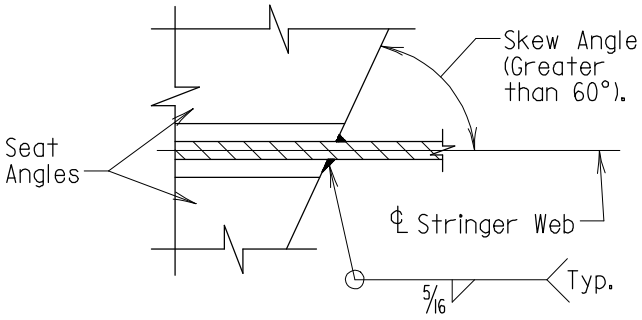

DETAIL A

Scale: 1 1/2" = 1'-0"

Note:
Concrete diaphragm not shown.

APPROVAL		
R.S. Freedman DIRECTOR OFFICE OF STRUCTURES DATE: 11/13/85		
REVISIONS		
SHA	FHWA	
5-24-89	6-8-90	
2-14-00		
11-27-12		
3-7-13		

FHWA APPROVAL
DATE: 6-8-90

STATE OF MARYLAND
DEPARTMENT OF TRANSPORTATION
STATE HIGHWAY ADMINISTRATION
OFFICE OF STRUCTURES

STEEL SEAT ANGLES FOR SKEWED CONCRETE DIAPHRAGMS

STANDARD NO. SUP-SS(GEN)-204 SHEET 2 OF 2

SUPERSTRUCTURE STEEL

OLD NO. BR-SS(8.12)-85-170

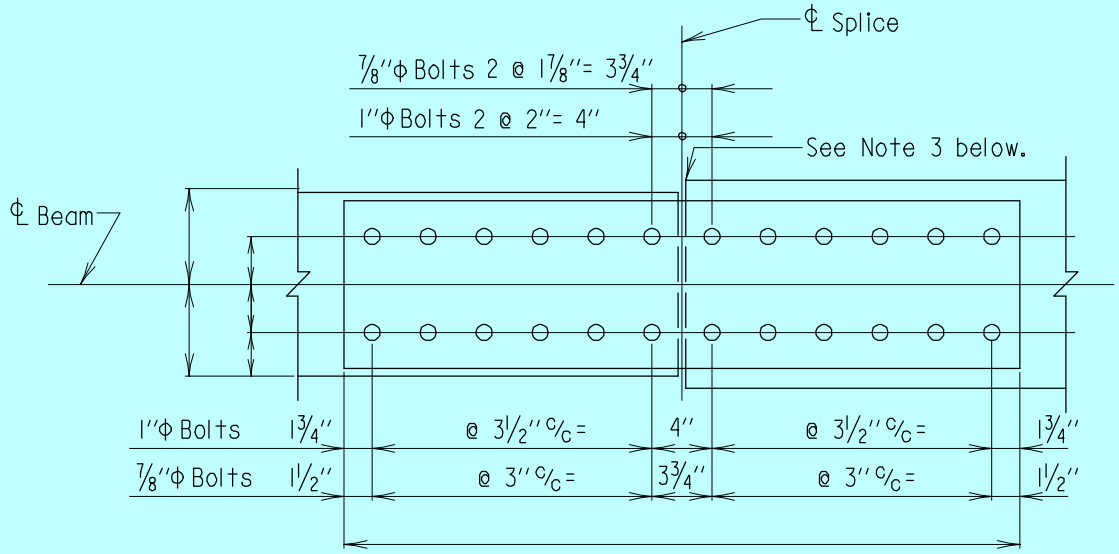

PLAN

Scale: 1" = 1'-0"

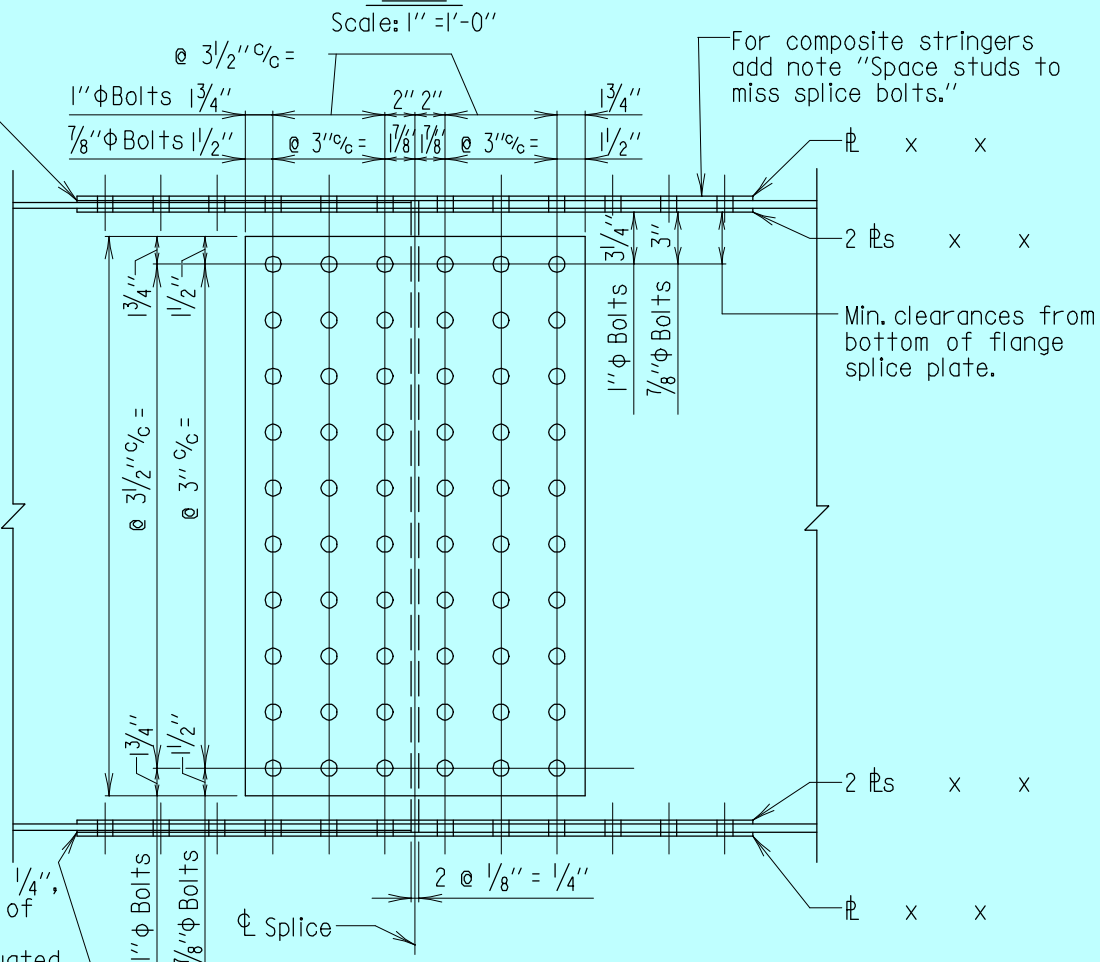

ELEVATION

Scale: 1" = 1'-0"

Notes:

1. All bolts to be 7/8"Φ High Strength Bolts (15/16"Φ open holes), ASTM A 325 unless 1"Φ High Strength Bolts are required by design (1 1/16" open holes). Bolts to be used when weathering structural steel is called for shall be ASTM A 325, Type 3.
2. All splice plates to be a minimum 1/2" thick.
3. If flange widths of adjacent stringers vary more than 2", then larger flange shall be tapered to smaller flange width in a distance of 1/2 length of cover plate. This only applies to bottom flange.
4. Bolts not shown in splice.
5. Bolt heads shall be on the exterior face of the fascia stringer and the bottom of bottom flange.

APPROVAL	
R.S. Freedman DIRECTOR OFFICE OF STRUCTURES	
DATE: 6/25/81	
REVISIONS	
SHA	FHWA
6-8-93	
12-27-93	
3-10-95	
10-9-07	
FHWA APPROVAL	
DATE:	

* FOR OFFICE USE ONLY *

STATE OF MARYLAND
DEPARTMENT OF TRANSPORTATION
STATE HIGHWAY ADMINISTRATION
OFFICE OF STRUCTURES

TYPICAL STEEL STRINGER SPLICE DETAIL

STANDARD NO. SUP-SS(GEN)-301 SHEET 1 OF 1

SUPERSTRUCTURE STEEL

OLD NO. BR-SS(8.09)-81-124

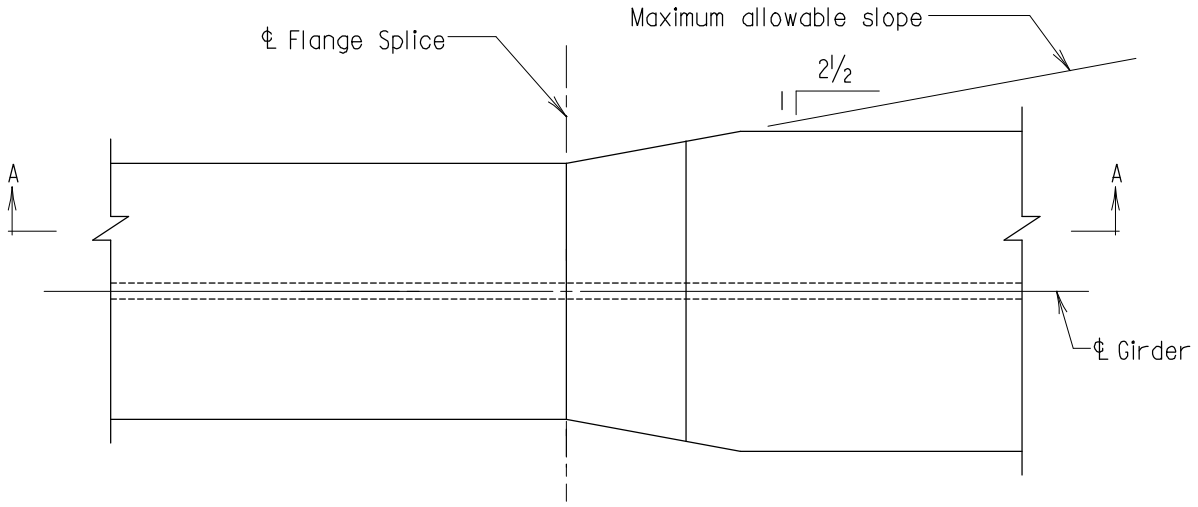

PLAN OF STRAIGHT TAPERED TRANSITION FLANGE SPLICE

Scale: None

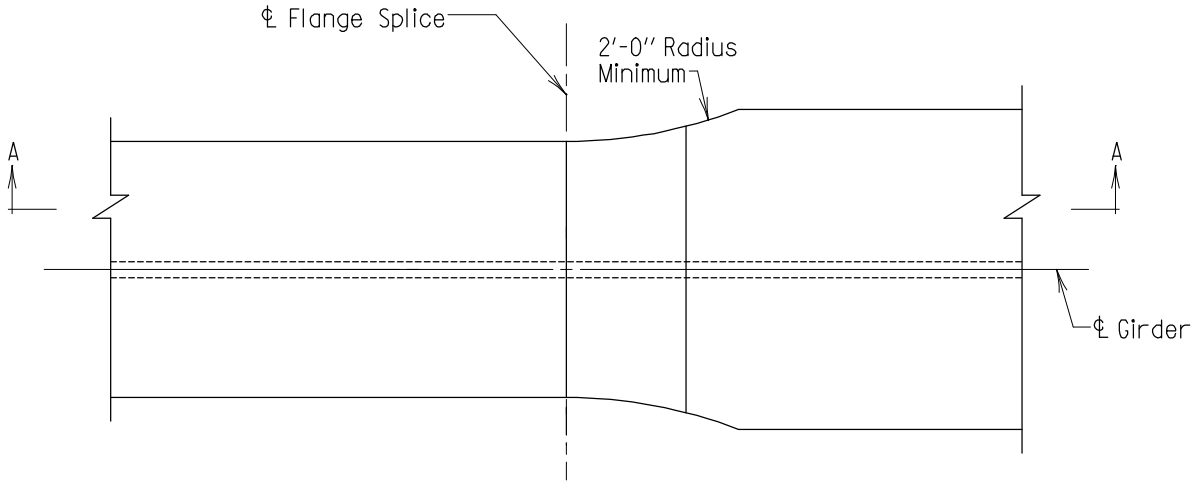

PLAN OF RADIAL TRANSITION FLANGE SPLICE

Scale: None

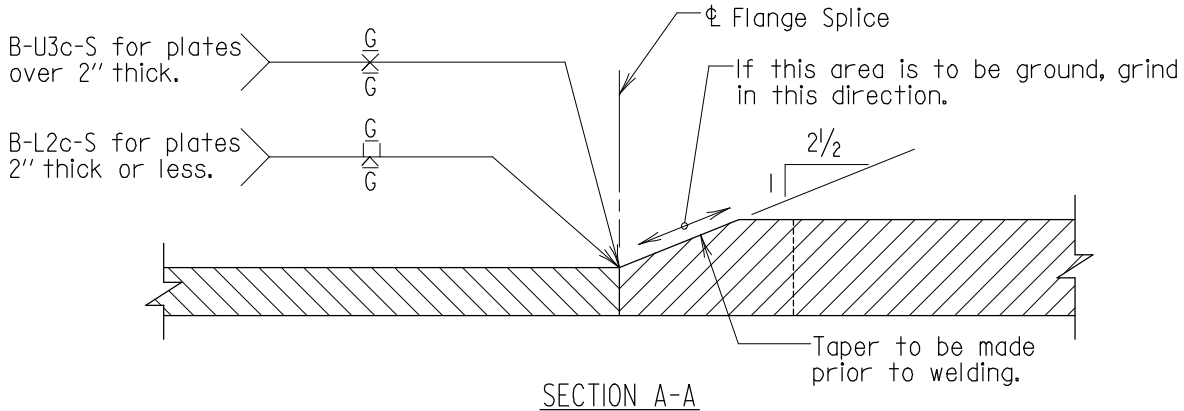

SECTION A-A

Scale: None

Notes:

1. Butt welds of flange splice plates to be ground flush prior to attaching web plates.
2. Splice shown is for different width and different thickness flanges; if only one variation is present use pertinent portion of standard.
3. Fabricator may use either of the above transition details.

APPROVAL	
R.S. Friedman DIRECTOR OFFICE OF STRUCTURES	
DATE: 4/25/85	
REVISIONS	
SHA	FHWA
11-14-85	6-8-90
1-2-86	6-8-90
6-20-89	6-8-90
8-16-92	

FHWA APPROVAL
DATE: 6-8-90

STATE OF MARYLAND
DEPARTMENT OF TRANSPORTATION
STATE HIGHWAY ADMINISTRATION
OFFICE OF STRUCTURES

SHOP SPLICE DETAILS FOR
PLATE GIRDER STRINGERS

STANDARD NO. SUP-SS(GEN)-401

SHEET 1 OF 2

SUPERSTRUCTURE STEEL

OLD NO. BR-SS(8.11)-85-173

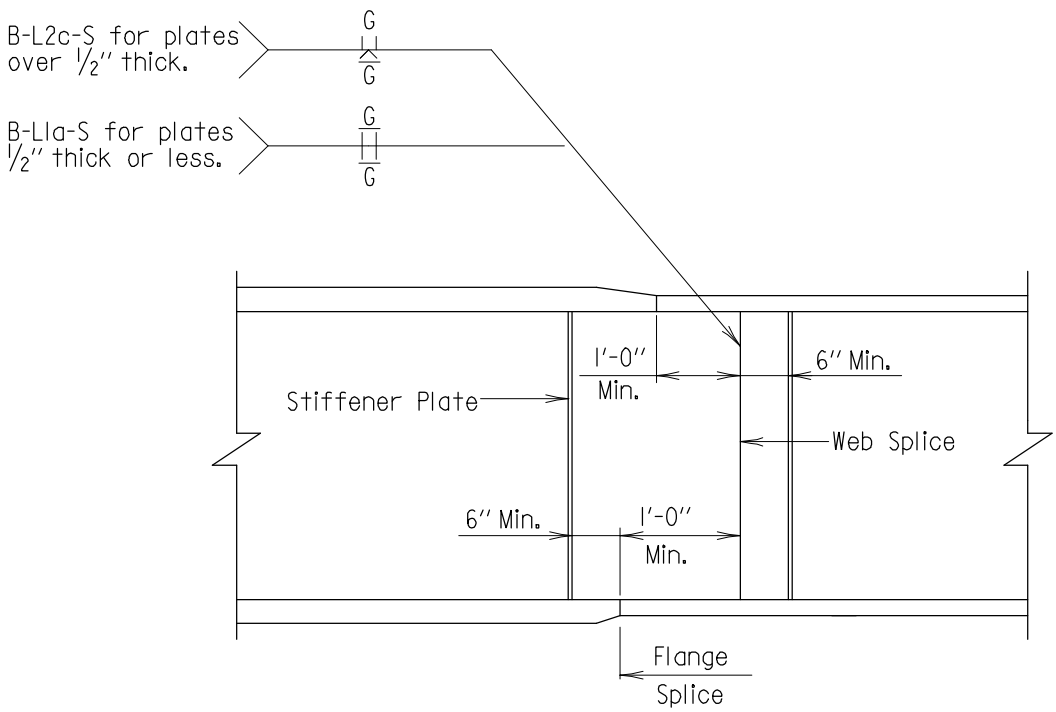

ELEVATION OF GIRDER

Scale: None

APPROVAL		
R.S. Freedman DIRECTOR OFFICE OF STRUCTURES DATE: 8/16/92		
REVISIONS		
SHA	FHWA	
8-16-92		
FHWA APPROVAL		
DATE:		

STATE OF MARYLAND
DEPARTMENT OF TRANSPORTATION
STATE HIGHWAY ADMINISTRATION
OFFICE OF STRUCTURES

SHOP SPLICE DETAILS FOR PLATE GIRDER STRINGERS

STANDARD NO. SUP-SS(GEN)-401 SHEET 2 OF 2

SUPERSTRUCTURE STEEL

OLD NO. BR-SS(8,11)-85-173

SUPERSTRUCTURE

STRUCTURAL STEEL

CROSS FRAMES

(SUP-SS(CF))

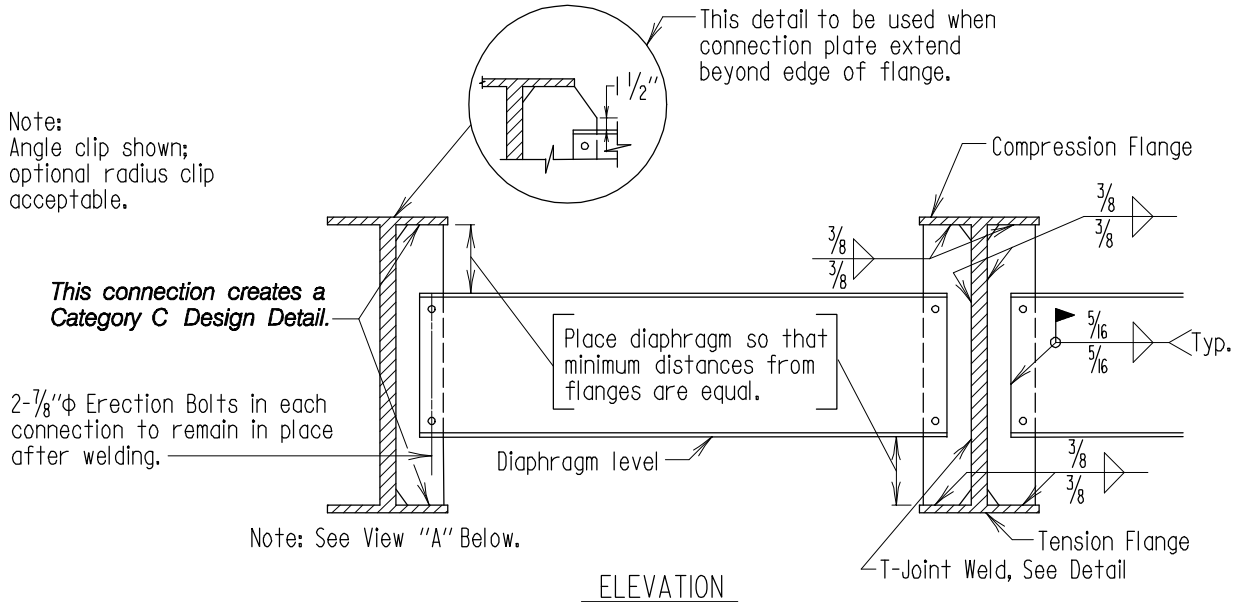

ELEVATION

Scale: None

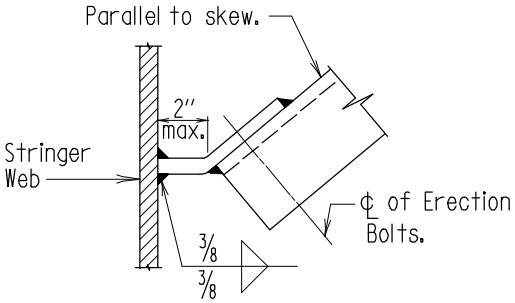

T-JOINT WELD DETAIL FOR SKEW ANGLE OVER 70° TO 90°

Scale: None

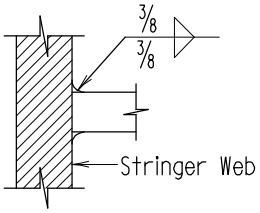

T-JOINT WELD DETAIL FOR SKEW ANGLE 70° OR LESS

Scale: None

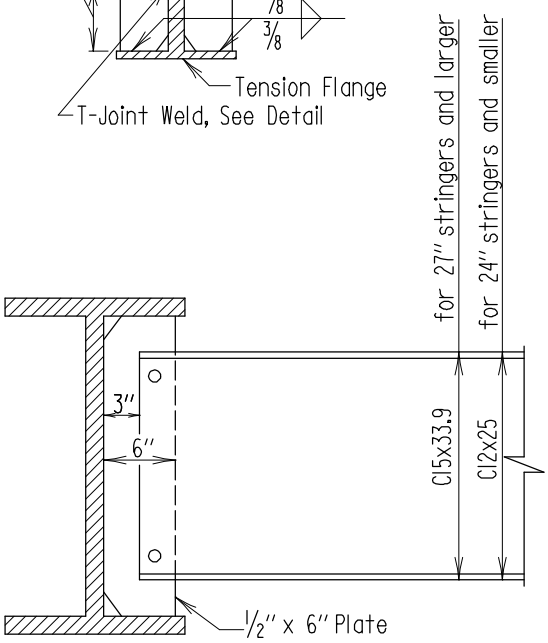

VIEW A

Scale: None

Notes:

1. *Slant lettering indicates note "For Office Use Only"*
2. Where the angle between the center line of roadway and the center line of bearing is 70° or less place diaphragms at 90 to the stringers. diaphragms shall be spaced as shown in detail this sheet and as noted below.
3. Where aforementioned angle is greater than 70°, the diaphragms shall be parallel to the center line of bearing of the stringers.
4. Space intermediate diaphragms at 20'± to 25'± ℄; i.e. for spans. (Non-curved bridges only).
   Up to 25' ℄ bearings-no intermediate Diaphragm.
   From 25' to 50' ℄ bearings-One Intermediate Diaphragm.
   From 50' to 75' ℄ bearings-Two Intermediate Diaphragms, etc.
   (See Framing Plan).
5. All diaphragms are to be completely connected to stringers before deck slab is poured.

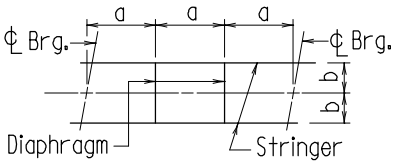

DIAPHRAGM SPACING 70° OR LESS SKEW

Scale: None

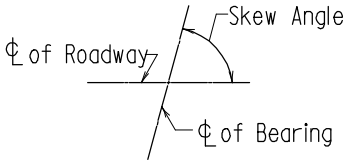

SKEW ANGLE

Scale: None

APPROVAL		
R.S. Friedman DIRECTOR OFFICE OF STRUCTURES		
DATE: 6/20/75		
REVISIONS		
SHA	FHWA	
7-20-93		
3-3-94		
1-22-01		
10-22-03		
FHWA APPROVAL DATE: 11-9-76		

STATE OF MARYLAND
DEPARTMENT OF TRANSPORTATION
STATE HIGHWAY ADMINISTRATION
OFFICE OF STRUCTURES

ROLLED STEEL BEAMS
INTERMEDIATE DIAPHRAGM DETAILS
WELDED CONNECTIONS

STANDARD NO. SUP-SS(CF)-101 SHEET 1 OF 2

SUPERSTRUCTURE - STEEL

OLD NO. BR-SS(8.03)-75-11

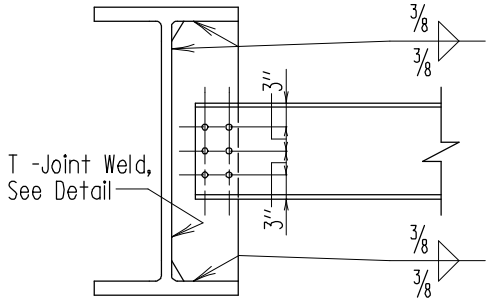

24" & SMALLER STRINGERS

See View "A" Below.

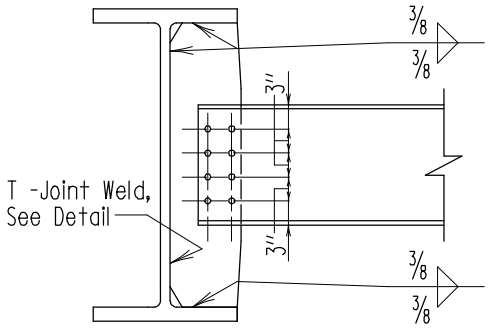

27" & LARGER STRINGERS

Note:
Angle clip shown;
optional radius clip
acceptable.

ELEVATIONS
Scale: 1/2" = 1'-0"

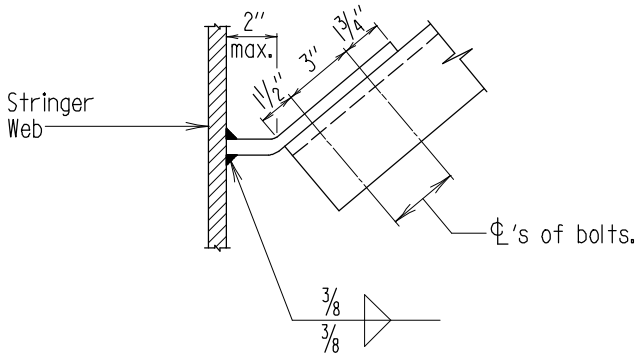

T-JOINT WELD DETAIL FOR SKEW ANGLE OVER 70° TO 90°
Scale: None

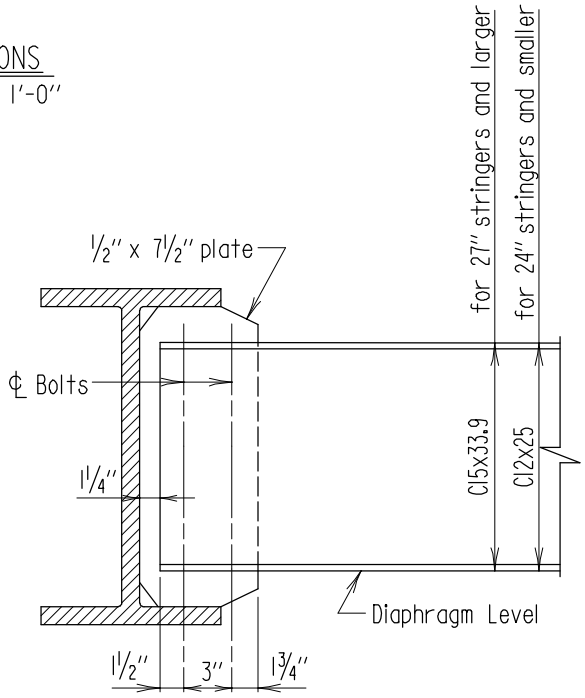

Note: Dimensions shown are for 90° connections.

VIEW 'A'
Scale: None

Notes:
1. For notes and all details not shown see sheet 1 of 2.
2. Contractor has option to use either welded or bolted connection. However only one type of connection may be used per bridge.
3. All bolts to be 7/8" Φ ASTM A325.
4. All bolts holes to be 15/16" Φ.
5. Bolt spacing applies regardless of skew.

APPROVAL	
R.S. Freedman DIRECTOR OFFICE OF STRUCTURES	
DATE: 6/20/75	
REVISIONS	
SHA	FHWA
10-20-87	12-1-87
7-20-93	
3-3-94	
10-22-03	

FHWA APPROVAL
DATE: 10-17-78

STATE OF MARYLAND
DEPARTMENT OF TRANSPORTATION
STATE HIGHWAY ADMINISTRATION
OFFICE OF STRUCTURES

ROLLED STEEL BEAMS
INTERMEDIATE DIAPHRAGM DETAILS
BOLTED CONNECTIONS

STANDARD NO. SUP-SS(CF)-101 SHEET 2 OF 2

SUPERSTRUCTURE - STEEL

OLD NO. BR-SS(8.03)-75-11

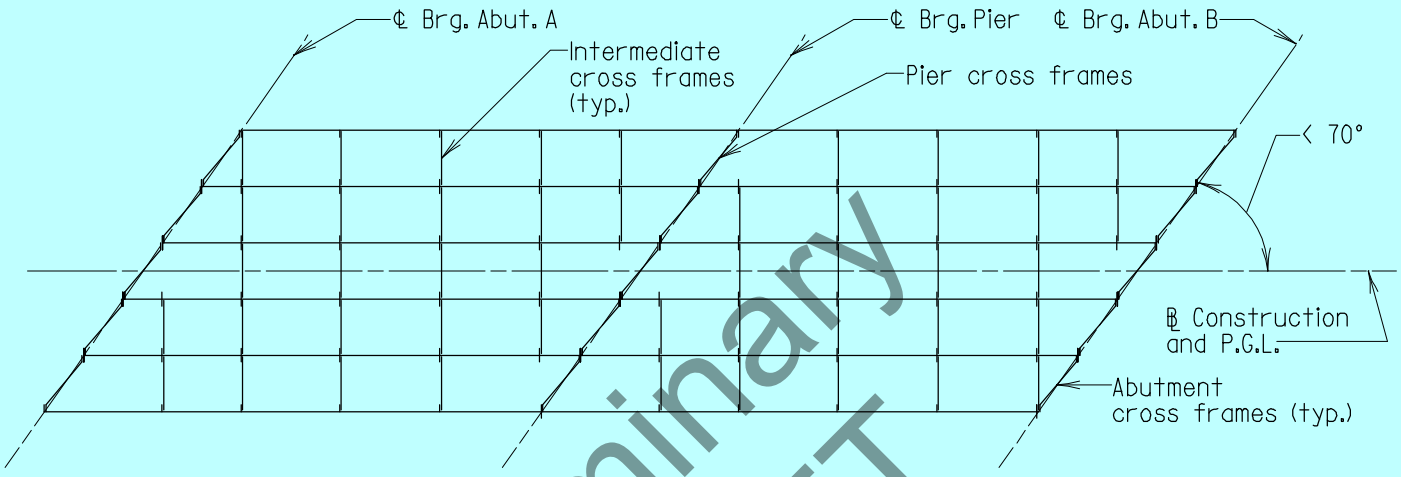

FRAMING PLAN
Scale: None

Preliminary DRAFT

Note:
All cross frames are to be placed normal to girders or to the girder tangent and shall be continuous lines.

Note to Designer:
The skew angle shown is the compliment of the skew angle as defined in AASHTO Section 6:7.4.

* PRELIMINARY DRAFT *
FOR OFFICE USE ONLY

APPROVAL	
_____ DEPUTY CHIEF ENGR. BRIDGE DEVEL. DATE: 09/01/15	
REVISIONS	
SHA	FHWA

STATE OF MARYLAND
DEPARTMENT OF TRANSPORTATION
STATE HIGHWAY ADMINISTRATION
OFFICE OF BRIDGE DEVELOPMENT

CROSS FRAME LAYOUT
SKEW ANGLE IS LESS THAN 70°

FHWA APPROVAL
DATE:

NO. SUP-SS(CF)-201 SHEET 1 OF 1

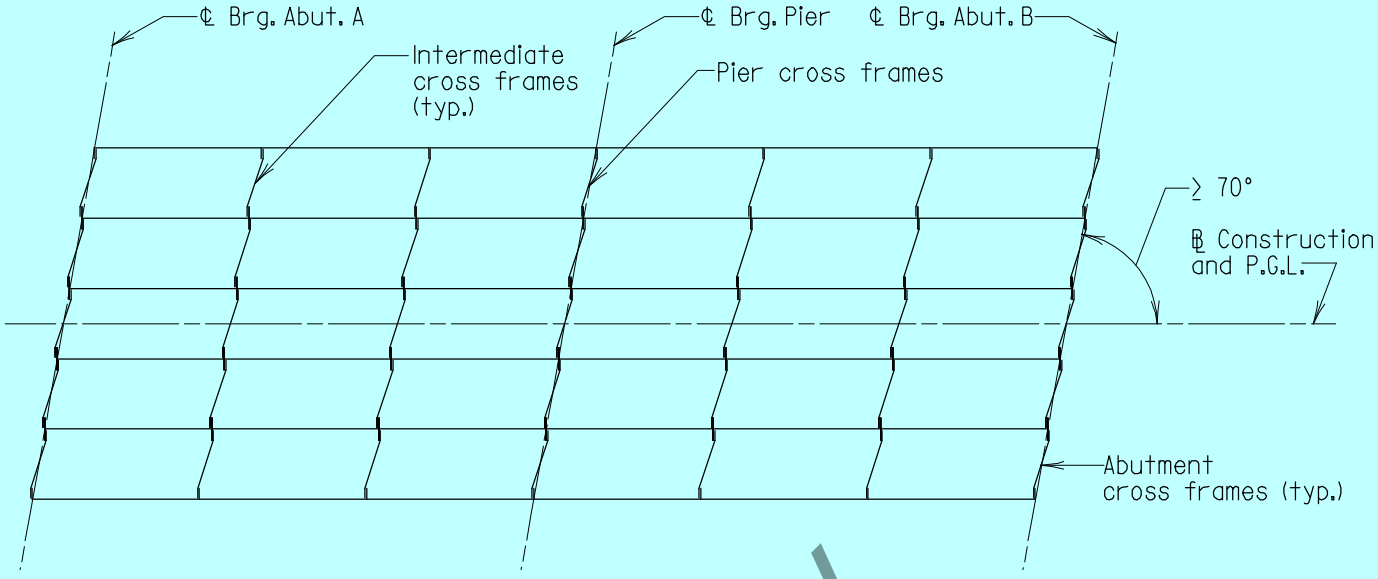

TANGENT FRAMING PLAN

Scale: None

Note:
All cross frames are to be placed parallel to abutments and pier in a continuous line.
For curved girders with radial supports cross frames shall be in continuous lines normal to girder tangents.

Preliminary DRAFT

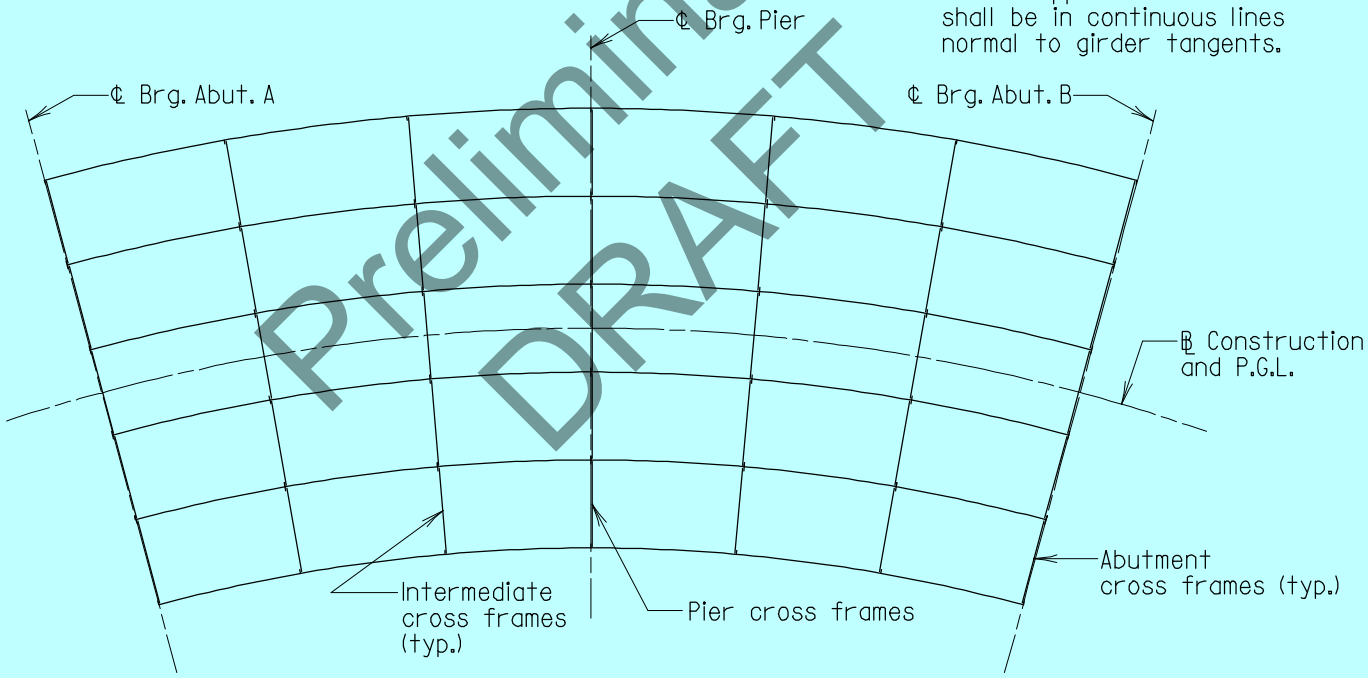

CURVED FRAMING PLAN

Scale: None

* PRELIMINARY DRAFT *
FOR OFFICE USE ONLY

Note to Designer:
The skew angle shown is the compliment of the skew angle as defined in AASHTO Section 6:7.4.

APPROVAL	
_____ DEPUTY CHIEF ENGR. BRIDGE DEVEL.	
DATE: 09/01/15	
REVISIONS	
SHA	FHWA

FHWA APPROVAL
DATE:

STATE OF MARYLAND
DEPARTMENT OF TRANSPORTATION
STATE HIGHWAY ADMINISTRATION
OFFICE OF BRIDGE DEVELOPMENT

CROSS FRAME LAYOUT
SKEW ANGLE IS GREATER THAN OF EQUAL TO 70°
OR RADIAL SUPPORTS

NO. SUP-SS(CF)-202 SHEET 1 OF 1

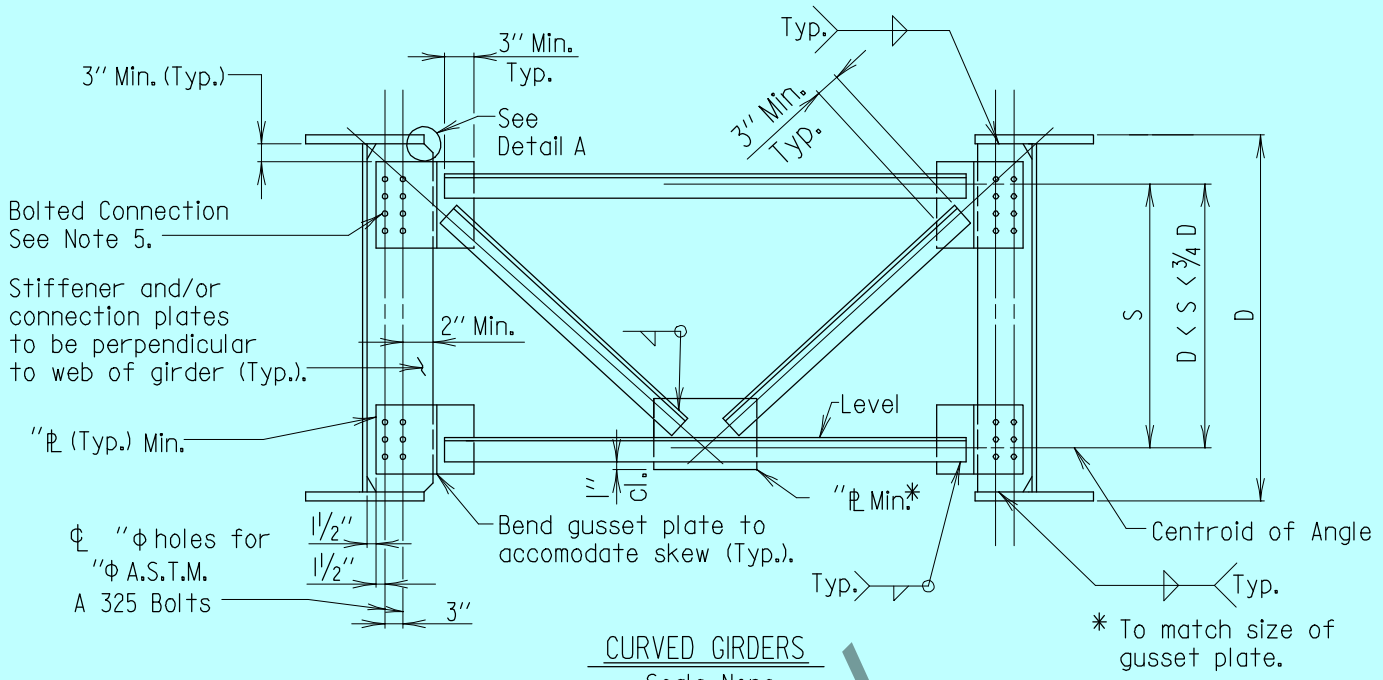

CURVED GIRDERS

Scale: None

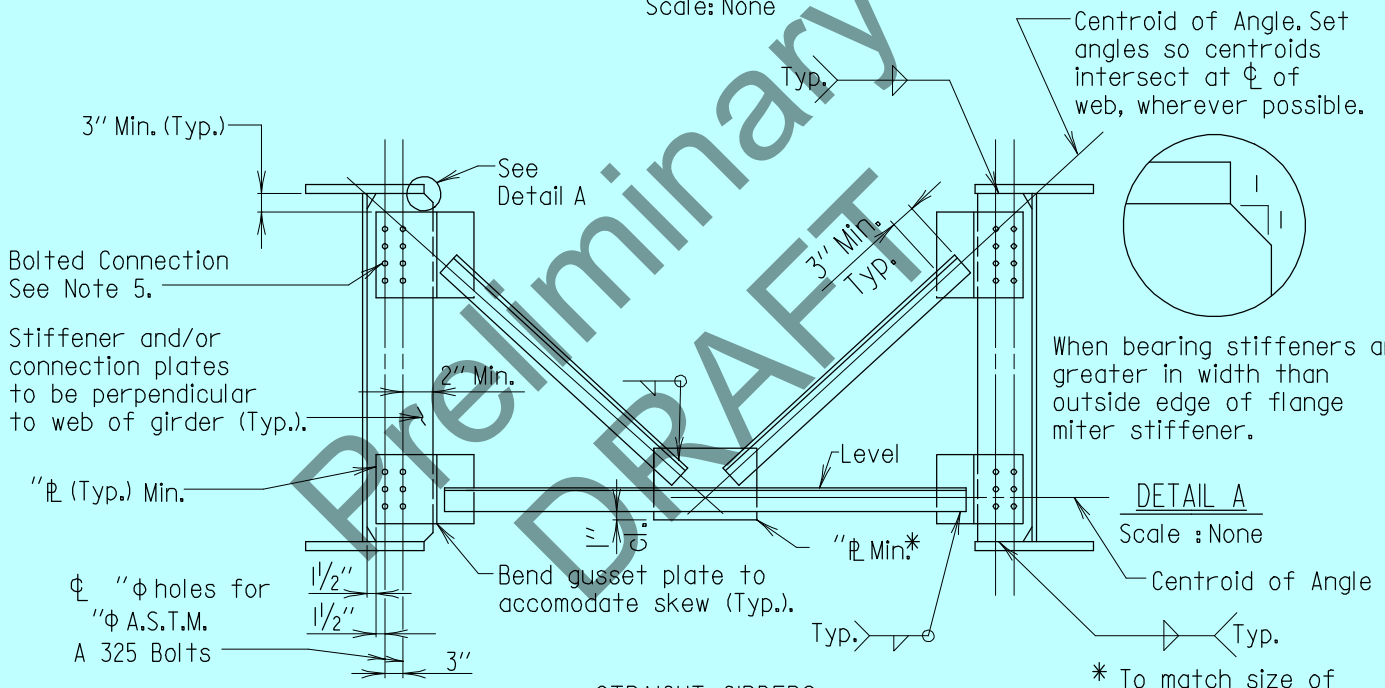

STRAIGHT GIRDERS

Scale: None

Preliminary DRAFT

Notes:

1. Intermediate cross frames on curved girders shall be designed as main members.
2. Intermediate cross frames shall be placed as follows:
   - Curved Girders: Cross Frames shall be placed radially; and shall extend to intersection of ℄ bearing and ℄ girder at supports; wherever possible. Additional diaphragms shall be provided at all support areas.
   - Straight Girders: Where the skew angle between the center line of roadway and center line of bearing is 70° or less, place cross frames at 90° to the girders. Where aforementioned angle is greater than 70°, the cross frames shall be parallel to the center line of bearing of the girders.
3. Maximum interior cross frame spacing shall be 25 feet.
4. The smallest angle used for bracing shall be 3 1/2 x 3 1/2 x 3/8 inches.
5. Weld sizes and number of 7/8''φ ASTM A 325 bolts shall be determined by the Designer. Minimum size weld is 5/16 in.
6. All cross frames are to be completely bolted and torqued before deck slab is poured.

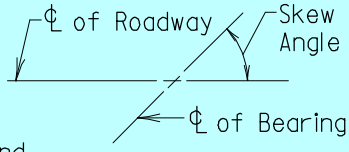

SKEW ANGLE

* PRELIMINARY DRAFT *
FOR OFFICE USE ONLY

APPROVAL	
DEPUTY CHIEF ENGR. BRIDGE DEVEL.	
DATE: 09/01/15	
REVISIONS	
SHA	FHWA

FHWA APPROVAL
DATE:

STATE OF MARYLAND
DEPARTMENT OF TRANSPORTATION
STATE HIGHWAY ADMINISTRATION
OFFICE OF BRIDGE DEVELOPMENT

INTERMEDIATE CROSS FRAMES (K-FRAMES)
FOR FABRICATED STEEL GIRDERS

NO. SUP-SS(CF)-301 SHEET 1 OF 1

SUPERSTRUCTURE STEEL

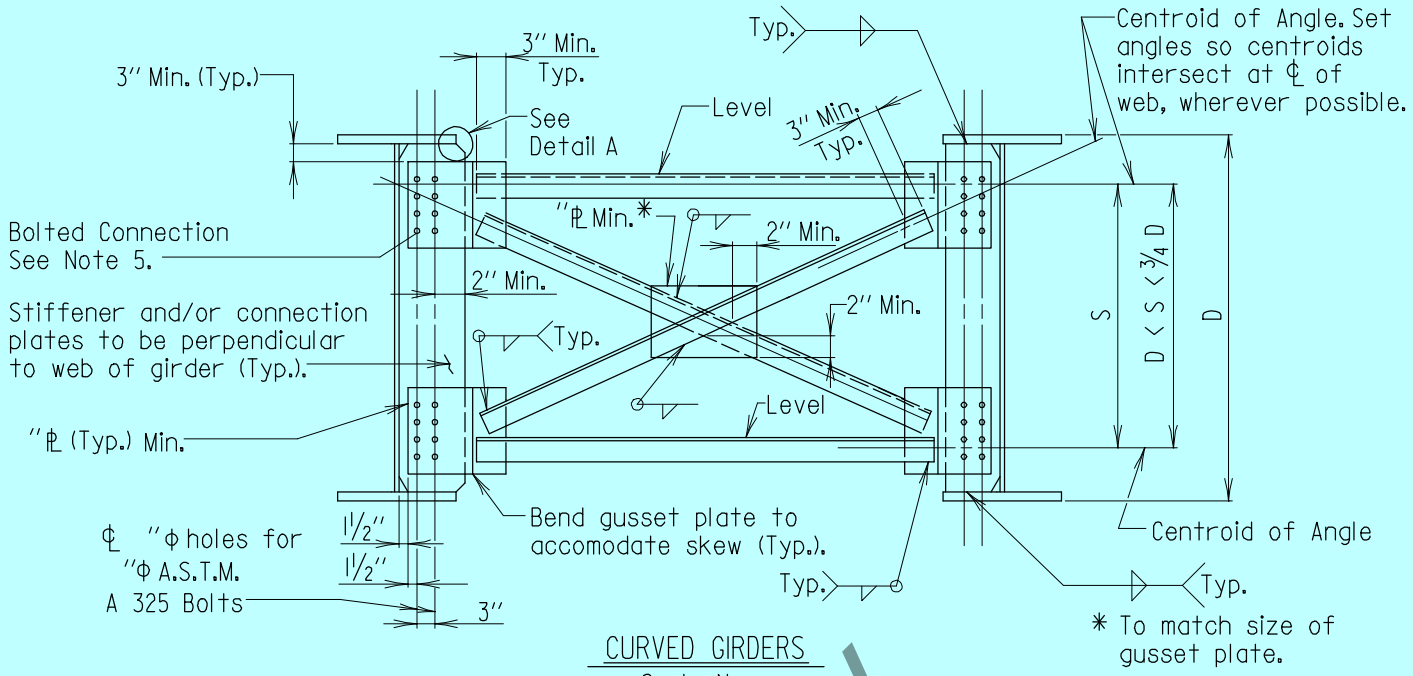

CURVED GIRDERS

Scale: None

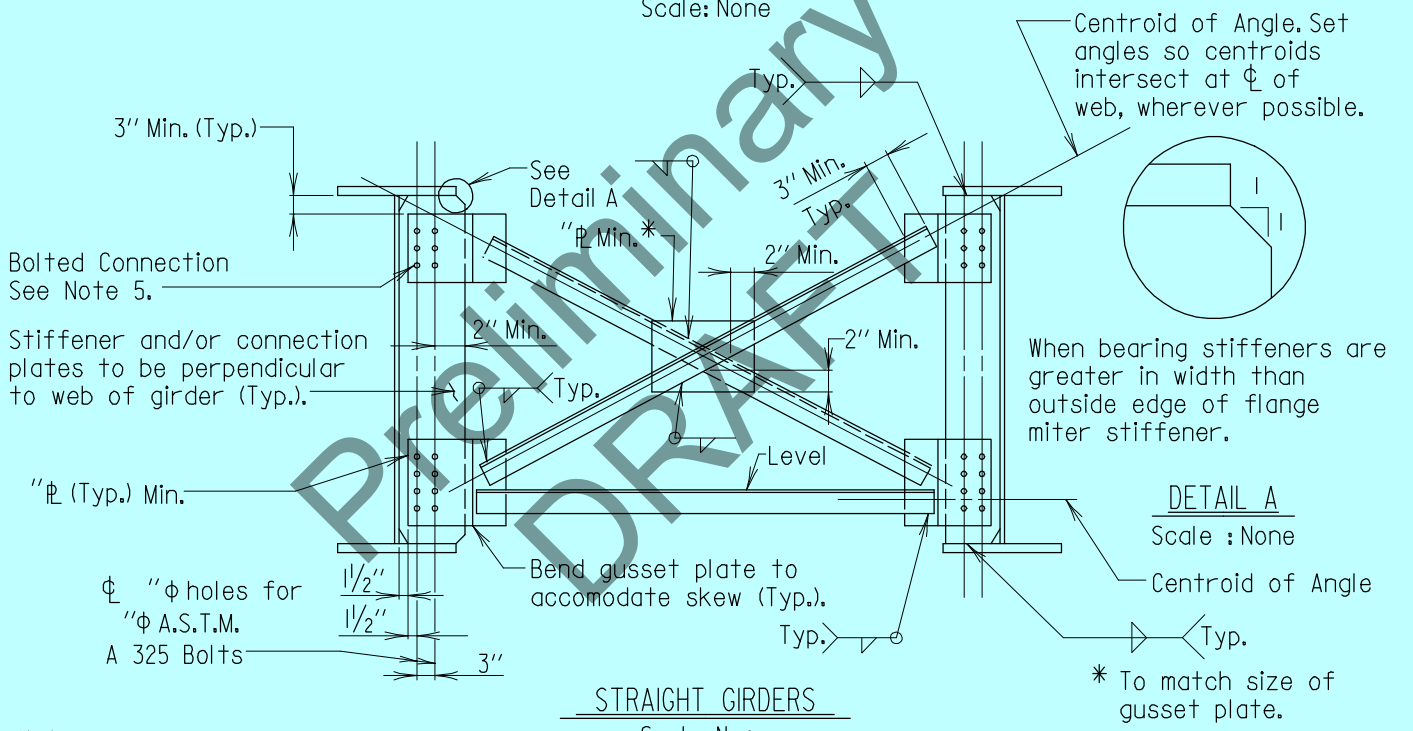

STRAIGHT GIRDERS

Scale: None

Preliminary DRAFT

Notes:

1. Intermediate cross frames on curved girders shall be designed as main members.
2. Intermediate cross frames shall be placed as follows:
   - Curved Girders: Cross Frames shall be placed radially; and shall extend to intersection of ℄ bearing and ℄ girder at supports; wherever possible. Additional diaphragms shall be provided at all support areas.
   - Straight Girders: Where the skew angle between the center line of roadway and center line of bearing is 70° or less, place cross frames at 90° to the girders. Where aforementioned angle is greater than 70°, the cross frames shall be parallel to the center line of bearing of the girders.
3. Maximum interior cross frame spacing shall be 25 feet.
4. The smallest angle used for bracing shall be 3 1/2 x 3 1/2 x 3/8 inches.
5. Weld sizes and number of 7/8''ϕ ASTM A 325 bolts shall be determined by the Designer. Minimum size weld is 5/16 in.
6. All cross frames are to be completely bolted and torqued before deck slab is poured.

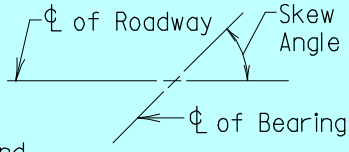

SKEW ANGLE

* PRELIMINARY DRAFT *
FOR OFFICE USE ONLY

APPROVAL	
DEPUTY CHIEF ENGR. BRIDGE DEVEL.	
DATE: 09/01/15	
REVISIONS	
SHA	FHWA

FHWA APPROVAL
DATE:

STATE OF MARYLAND
DEPARTMENT OF TRANSPORTATION
STATE HIGHWAY ADMINISTRATION
OFFICE OF BRIDGE DEVELOPMENT

INTERMEDIATE CROSS FRAMES (X-FRAMES)
FOR FABRICATED STEEL GIRDERS

NO. SUP-SS(CF)-302 SHEET 1 OF 1

SUPERSTRUCTURE STEEL

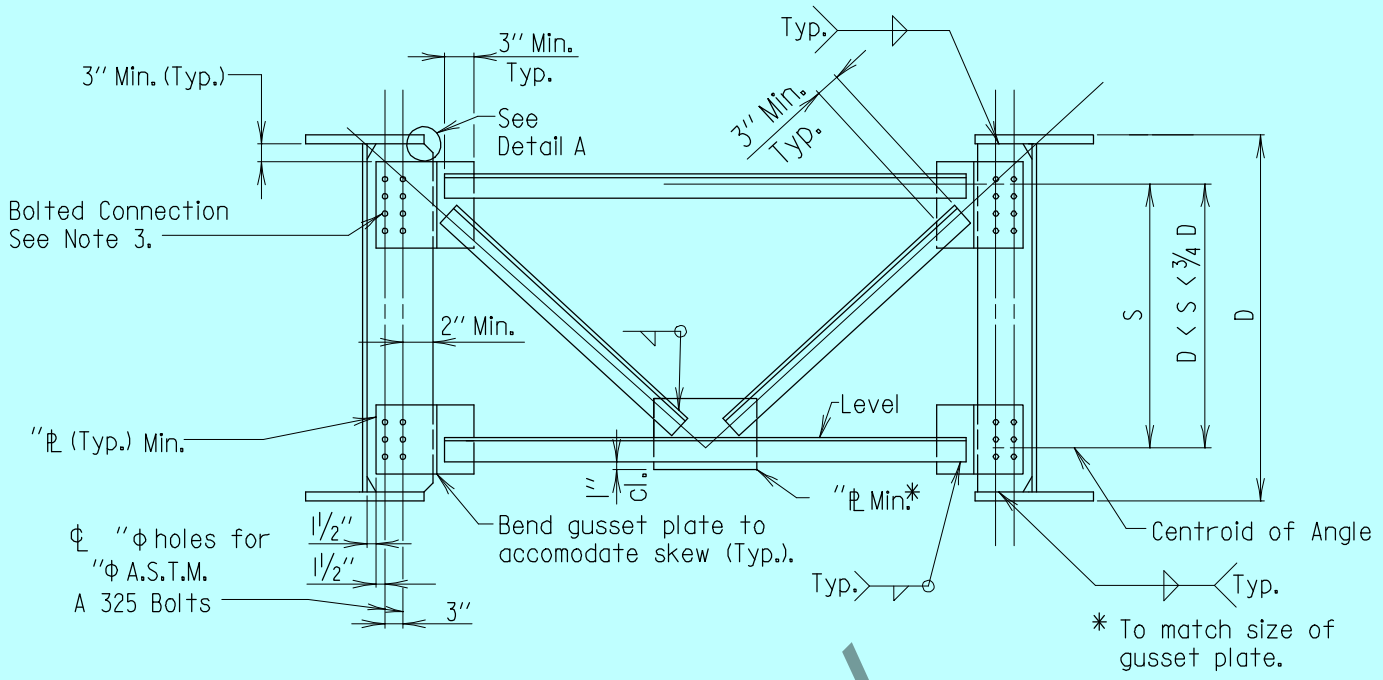

CURVED AND STRAIGHT GIRDERS

Scale: None

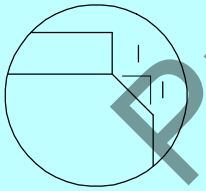

When bearing stiffeners are greater in width than outside edge of flange miter stiffener.

DETAIL A

Scale : None

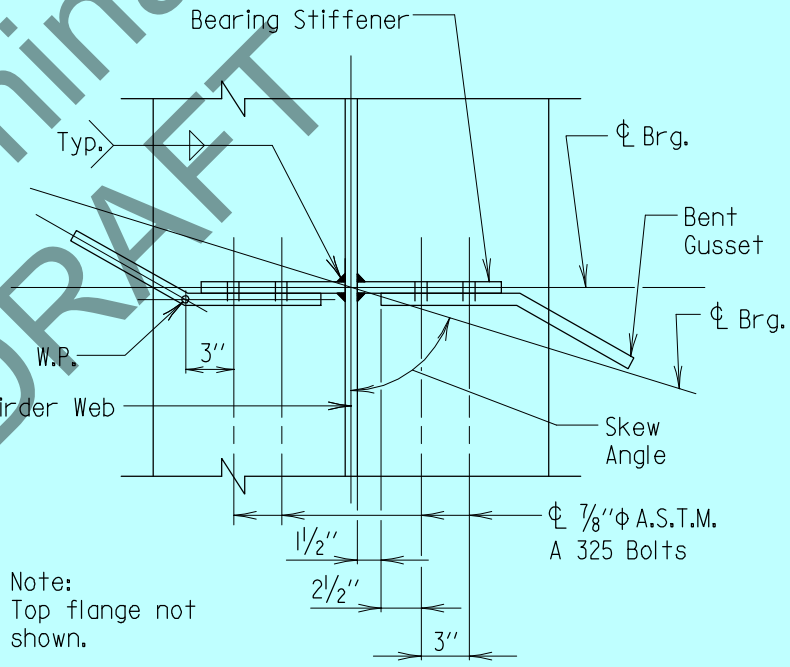

Note:
Top flange not shown.

CONNECTION DETAIL AT SKEWED PIER

Scale : None

Preliminary DRAFT

Notes:

1. The smallest angle used for bracing shall be 3 1/2 x 3 1/2 x 3/8 inches.
2. Weld sizes and number of ASTM A 325 bolts shall be determined by the Designer. Minimum size weld is 5/16 in.
3. All cross frames shall be completely bolted and torqued before deck slab is poured.
4. For bearing stiffener attachment see SUP-SS(GEN)-201.

* PRELIMINARY DRAFT *
FOR OFFICE USE ONLY

APPROVAL	
_____ DEPUTY CHIEF ENGR. BRIDGE DEVEL.	
DATE: 09/01/15	
REVISIONS	
SHA	FHWA

FHWA APPROVAL
DATE:

STATE OF MARYLAND
DEPARTMENT OF TRANSPORTATION
STATE HIGHWAY ADMINISTRATION
OFFICE OF BRIDGE DEVELOPMENT

CROSS FRAMES (K-FRAMES) AT PIERS WHERE FABRICATED STEEL GIRDERS ARE CONTINUOUS

NO. SUP-SS(CF)-401 SHEET 1 OF 1

SUPERSTRUCTURE STEEL

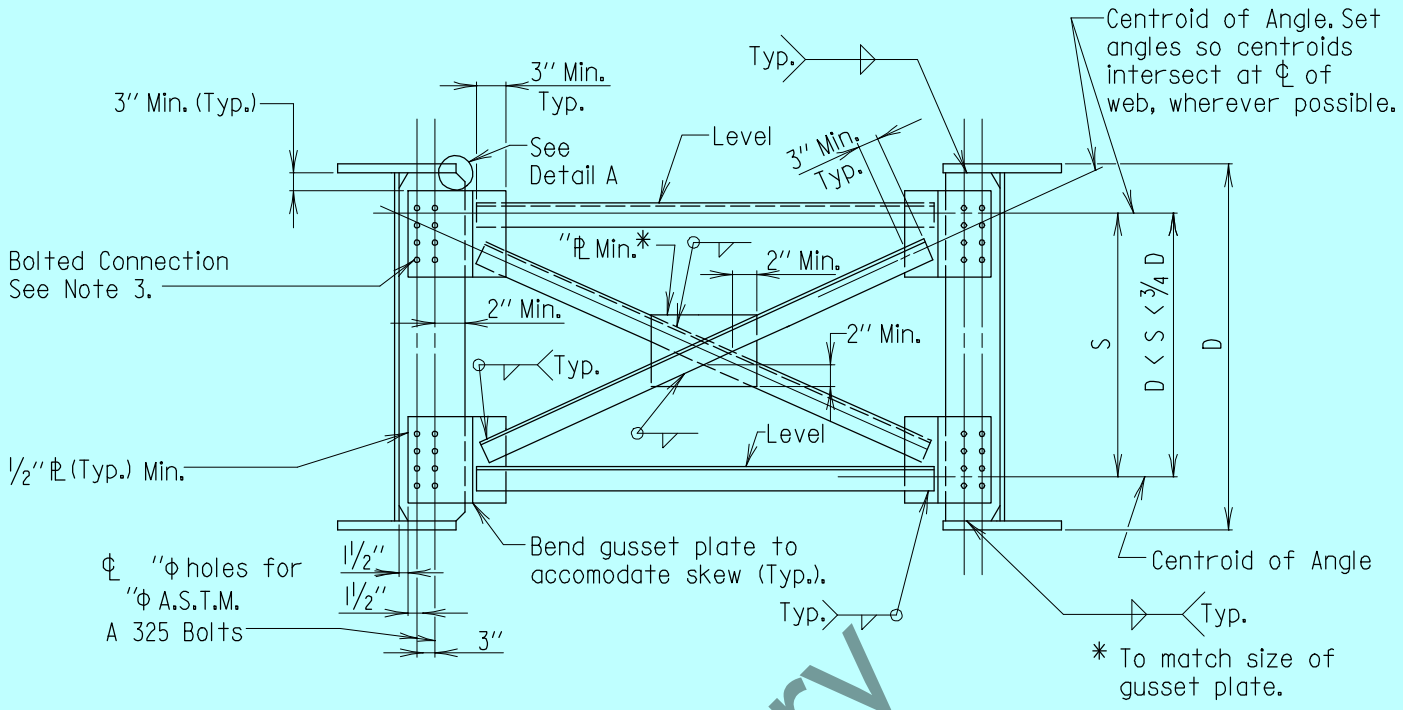

CURVED AND STRAIGHT GIRDERS

Scale: None

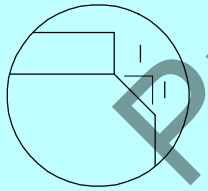

When bearing stiffeners are greater in width than outside edge of flange miter stiffener.

DETAIL A

Scale : None

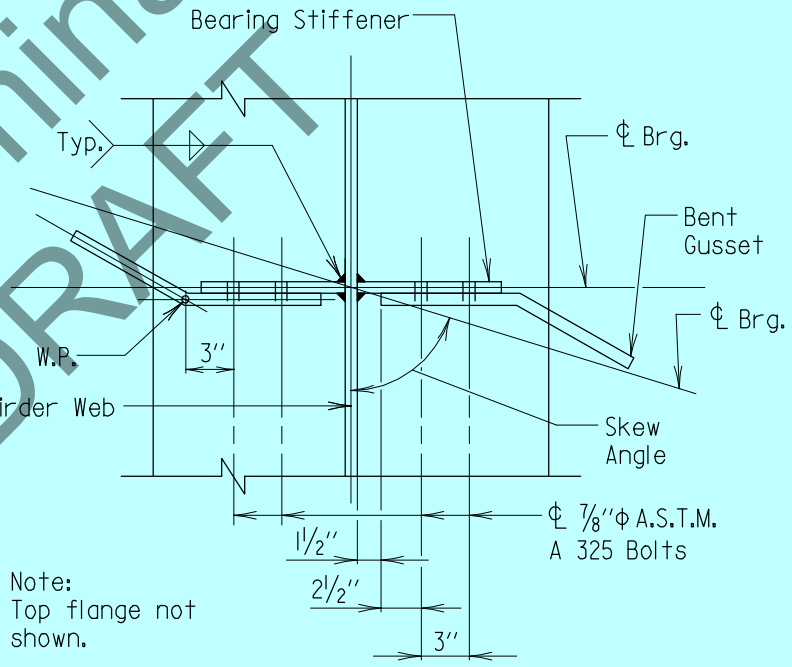

Note:
Top flange not shown.

CONNECTION DETAIL AT SKEWED PIER

Scale : None

Notes:

1. The smallest angle used for bracing shall be 3 1/2 x 3 1/2 x 3/8 inches.
2. Weld sizes and number of ASTM A 325 bolts shall be determined by the Designer. Minimum size weld is 5/16 in.
3. All cross frames shall be completely bolted and torqued before deck slab is poured.
4. For bearing stiffener attachment see SUP-SS(GEN)-201.

* PRELIMINARY DRAFT *
FOR OFFICE USE ONLY

APPROVAL	
_____ DEPUTY CHIEF ENGR. BRIDGE DEVEL.	
DATE: 09/01/15	
REVISIONS	
SHA	FHWA

FHWA APPROVAL
DATE:

STATE OF MARYLAND
DEPARTMENT OF TRANSPORTATION
STATE HIGHWAY ADMINISTRATION
OFFICE OF BRIDGE DEVELOPMENT

CROSS FRAMES (X-FRAMES) AT PIERS WHERE FABRICATED STEEL GIRDERS ARE CONTINUOUS

NO. SUP-SS(CF)-402 SHEET 1 OF 1

SUPERSTRUCTURE STEEL

Preliminary DRAFT

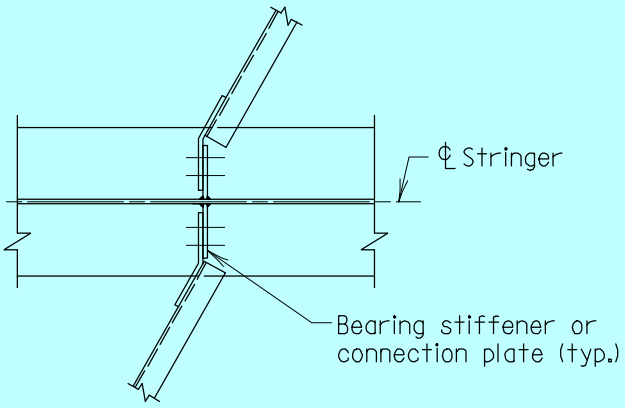

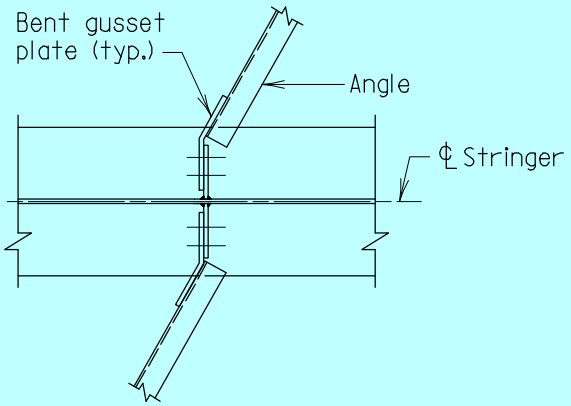

PLAN - 60° TO 90° SKEW ANGLES

Scale : 3/8" = 1'-0"

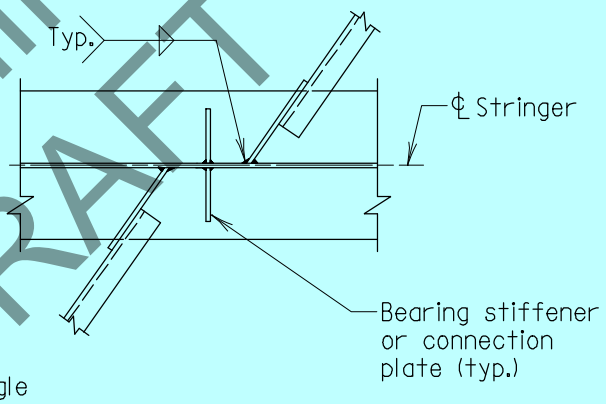

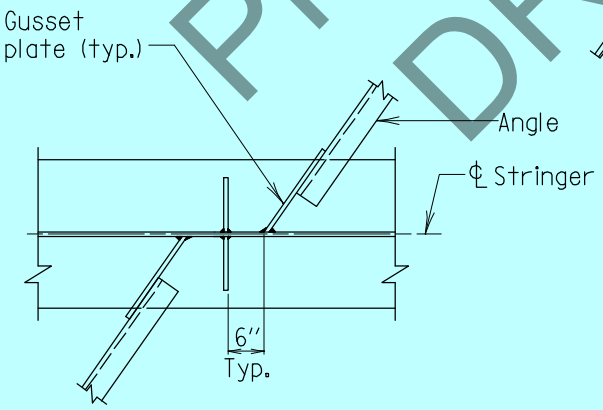

PLAN - 60° OR LESS SKEW ANGLE

Scale : 3/8" = 1'-0"

Preliminary DRAFT

Notes:

1. The smallest angle used for bracing shall be 3 1/2 x 3 1/2 x 3/8 inches.
2. Weld sizes and number of ASTM A 325 bolts shall be determined by the Designer. Minimum size weld is 5/16 in.
3. All cross frames shall be completely bolted and torqued before deck slab is poured.
4. For bearing stiffener attachment see SUP-SS(GEN)-201.

* PRELIMINARY DRAFT *
FOR OFFICE USE ONLY

APPROVAL	
_____ DEPUTY CHIEF ENGR. BRIDGE DEVEL.	
DATE: 09/01/15	
REVISIONS	
SHA	FHWA

FHWA APPROVAL
DATE:

STATE OF MARYLAND
DEPARTMENT OF TRANSPORTATION
STATE HIGHWAY ADMINISTRATION
OFFICE OF BRIDGE DEVELOPMENT

CROSS FRAME CONNECTIONS

NO. SUP-SS(CF)-501 SHEET 1 OF 1

SUPERSTRUCTURE STEEL

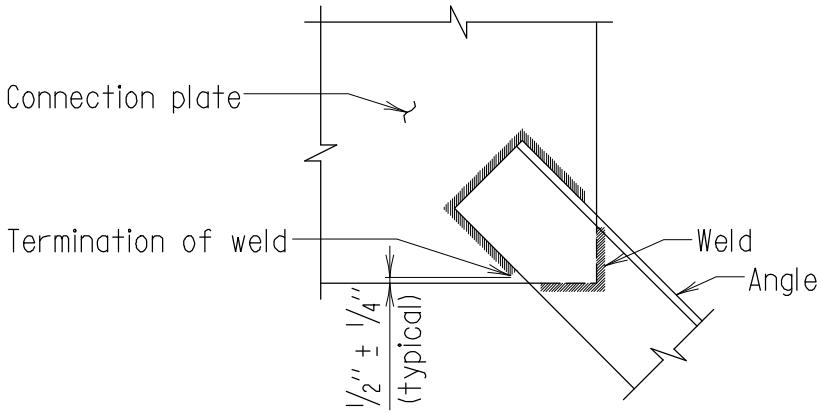

CROSS FRAME WELDING DETAIL

Scale: 1/2" = 1'-0"

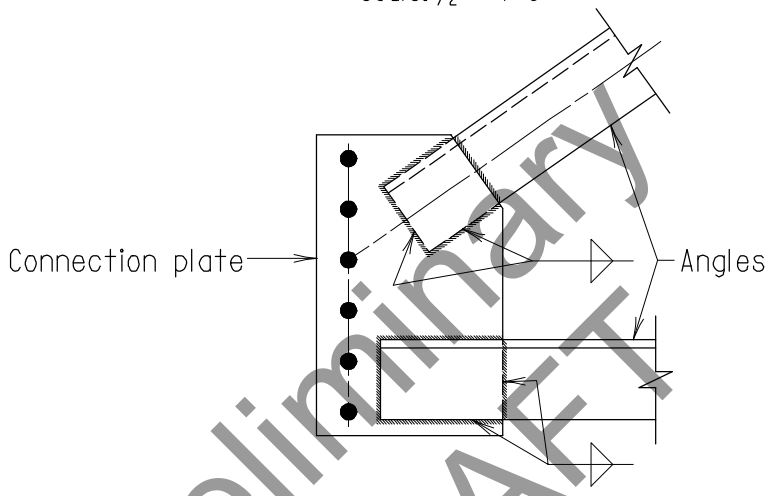

DETAIL A

Scale: 1/2" = 1'-0"

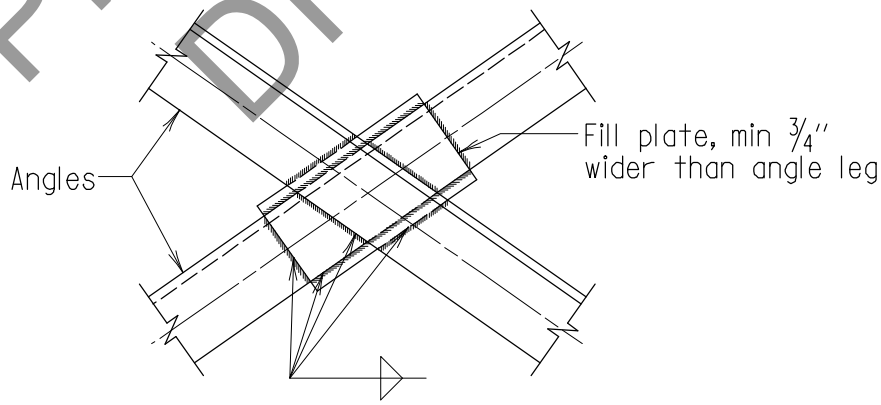

DETAIL B

Scale: 1/2" = 1'-0"

Preliminary
DRAFT

Note:
All cross frame welds to be terminated from edge of gusset plates, fill plates or angles as indicated.

* PRELIMINARY DRAFT *

APPROVAL	
_____ DEPUTY CHIEF ENGR. BRIDGE DEVEL.	
DATE: 09/01/15	
REVISIONS	
SHA	FHWA
FHWA APPROVAL	
DATE:	

STATE OF MARYLAND
DEPARTMENT OF TRANSPORTATION
STATE HIGHWAY ADMINISTRATION
OFFICE OF BRIDGE DEVELOPMENT

WELD TERMINATION DETAILS FOR CROSS FRAMES

NO. SUP-SS(CF)-502 SHEET 1 OF 1

SUPERSTRUCTURE STEEL

SUPERSTRUCTURE

STRUCTURAL STEEL

DETAILS FOR DECK REPLACEMENTS

(SUP-SS(DR))

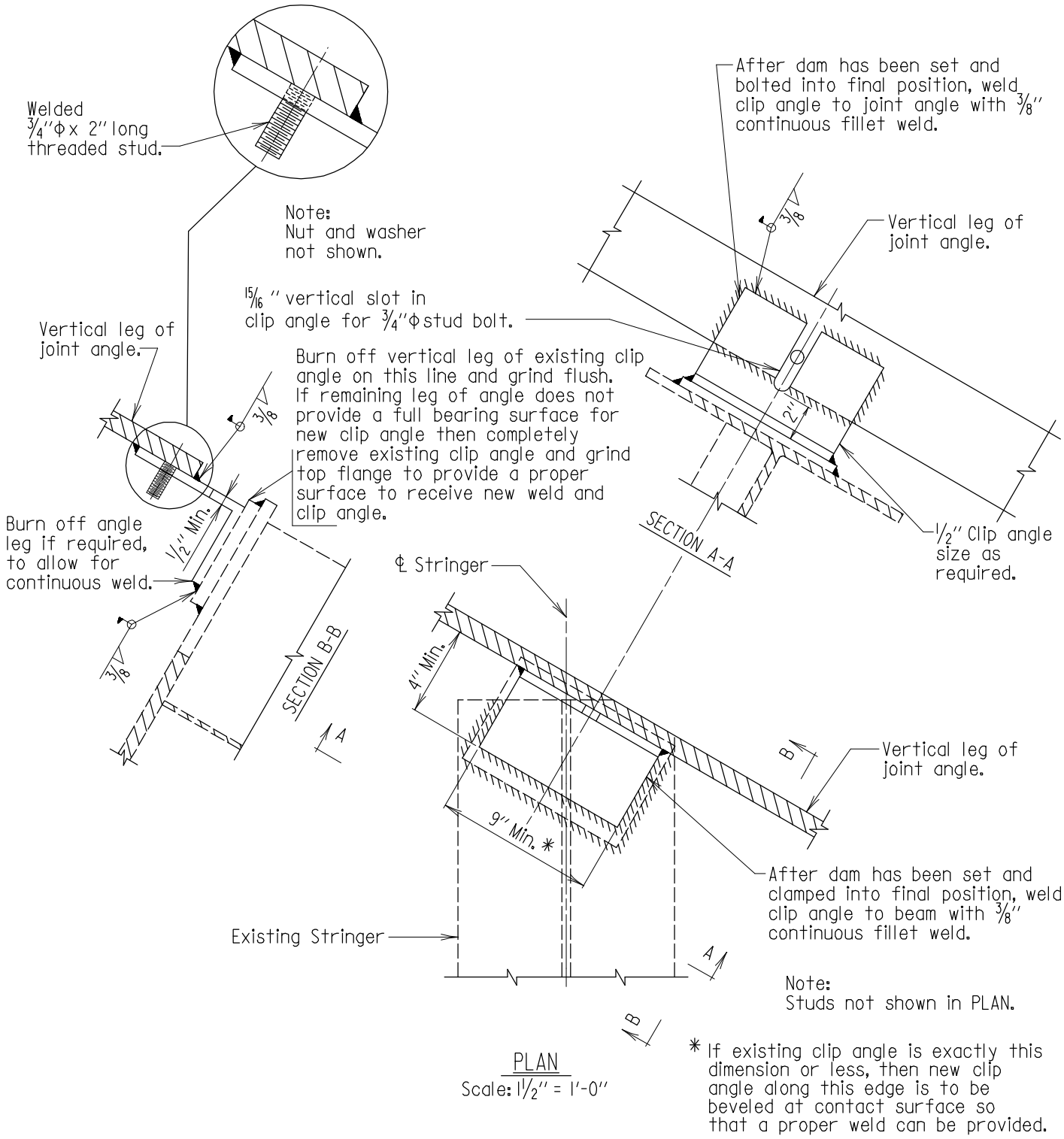

Note:
Existing members shown dashed.

APPROVAL	
E.S. Freedman DIRECTOR OFFICE OF STRUCTURES DATE: 4/12/78	
REVISIONS	
SHA	FHWA
2-23-93	
2-17-94	
5-24-01	
7-24-01	

FHWA APPROVAL	
DATE: 10-17-78	

STATE OF MARYLAND
DEPARTMENT OF TRANSPORTATION
STATE HIGHWAY ADMINISTRATION
OFFICE OF STRUCTURES

ROADWAY JOINT - CLIP ANGLE DETAIL
DECK REPLACEMENT - EXISTING STRINGER

STANDARD NO. SUP-SS(DR)-101 SHEET 1 OF 1

SUPERSTRUCTURE-STEEL

OLD NO. BR-SS(8.06)-78-72

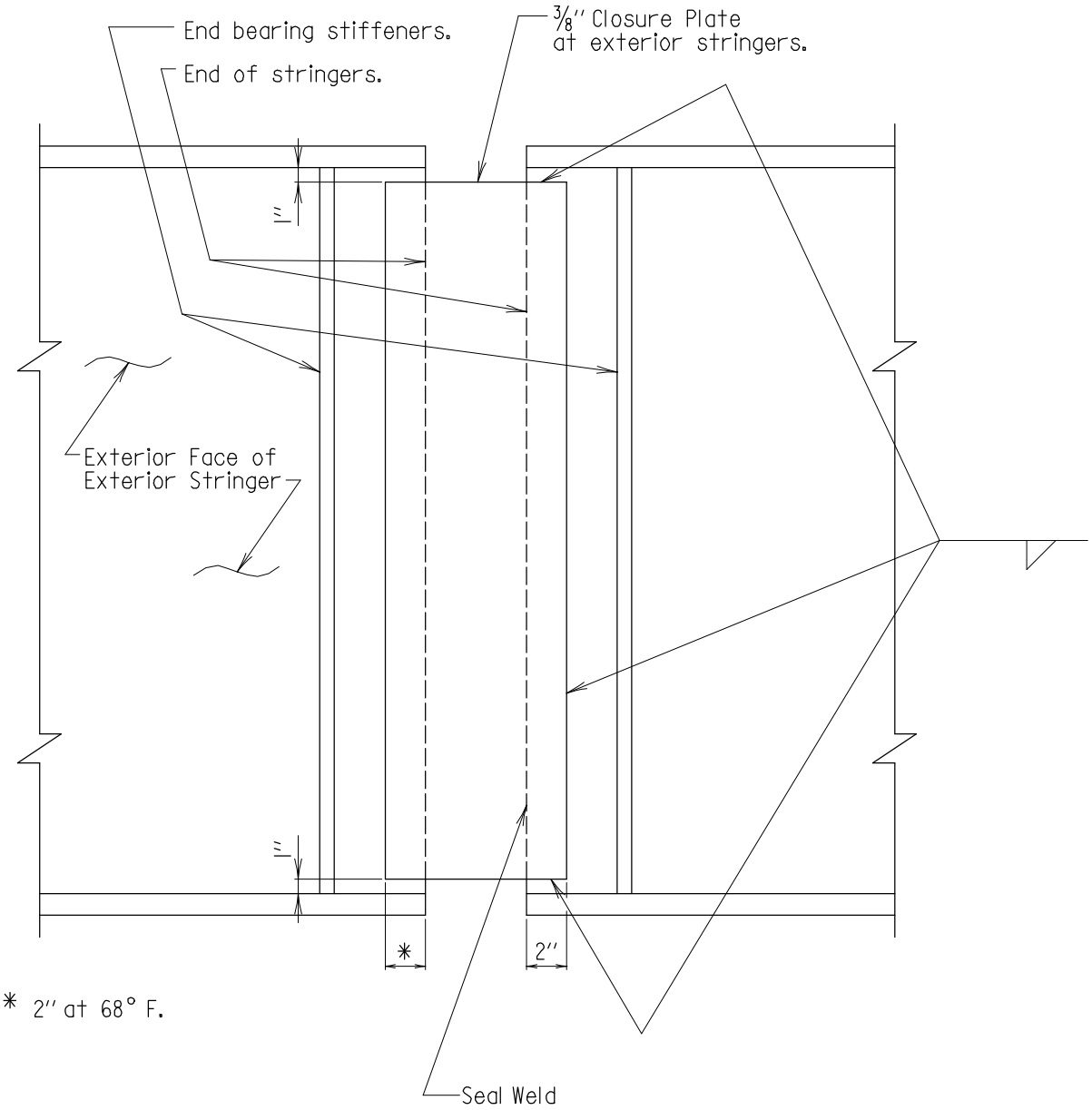

ELEVATION

Scale: None

Notes:

1. Closure plates to be used on all exterior stringers at supports where stringers are not continuous.
2. If stringers are of different depths, at a support, control dimensions shall apply to shallower stringer.
3. Weld to stringer on fixed shoes, if possible, but only weld to one stringer.
4. Do not provide closure plates on the median side of dual bridges where facias are 50' or less apart.

APPROVAL	
E.S. Freedman DIRECTOR OFFICE OF STRUCTURES	
DATE: 6/3/76	
REVISIONS	
SHA	FHWA

FHWA APPROVAL
DATE: 11-9-76

STATE OF MARYLAND
DEPARTMENT OF TRANSPORTATION
STATE HIGHWAY ADMINISTRATION
OFFICE OF STRUCTURES

FASCIA STRINGER
CLOSURE PLATE DETAIL

STANDARD NO. SUP-SS(DR)-201 SHEET 1 OF 1

SUPERSTRUCTURE STEEL

OLD NO. BR-SS(8.04)-75-20

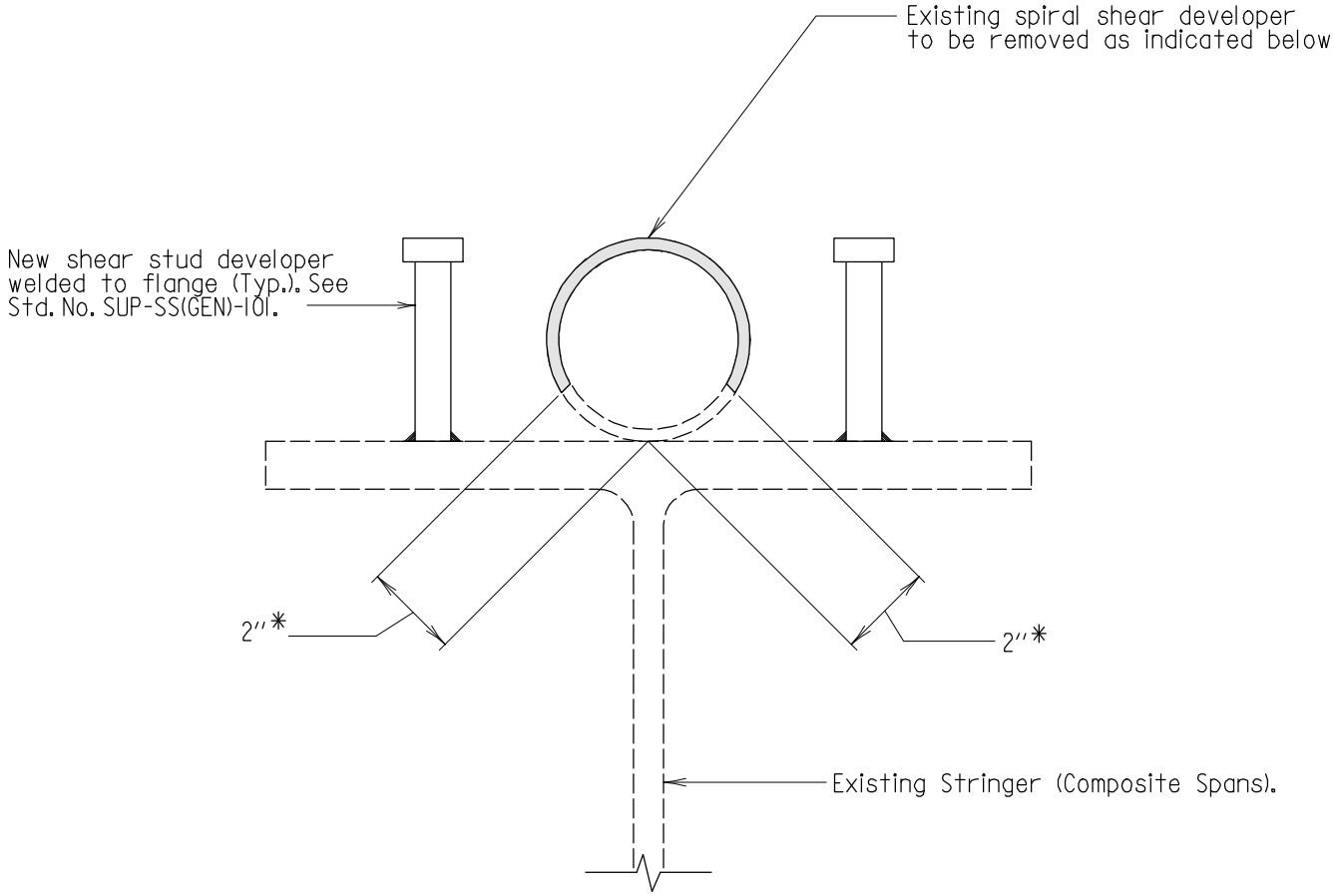

SPIRAL REMOVAL

Scale: 3" = 1'-0"

* Maximum portion of existing spiral to remain.

Notes for Spiral Removal and New Shear Studs:

1. Contractor shall cut all spiral shear developers off as close to flange as possible. Burning off spirals from flange will not be allowed.
2. For size and number of new studs per row and for longitudinal spacing of rows, see pertinent superstructure sheet.

APPROVAL	
R.S. Freedman DIRECTOR OFFICE OF STRUCTURES	
DATE: 5/19/11	
REVISIONS	
SHA	FHWA

FHWA APPROVAL
DATE: 7-19-11

STATE OF MARYLAND
DEPARTMENT OF TRANSPORTATION
STATE HIGHWAY ADMINISTRATION
OFFICE OF STRUCTURES

DETAIL OF EXISTING SPIRAL REMOVAL

STANDARD NO. SUP-SS(DR)-301 SHEET 1 OF 1

SUPERSTRUCTURE STEEL

OLD NO. BR-SS(6.10)-79-76B

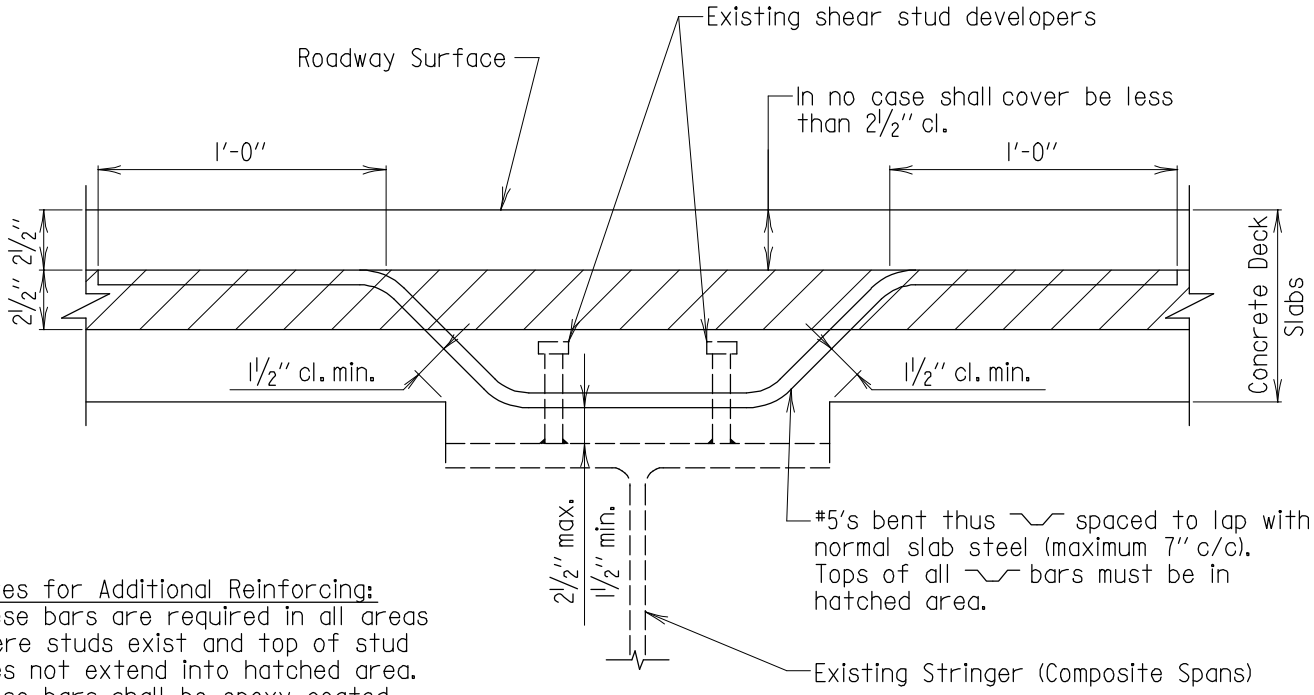

SECTION

Scale: 1½" = 1'-0"

Notes for Additional Reinforcing:

1. These bars are required in all areas where studs exist and top of stud does not extend into hatched area.
2. These bars shall be epoxy coated.

In lieu of additional reinforcing steel, the contractor has the option of welding extension studs on top of the existing studs (typ.). Length of extension to be determined in the field.

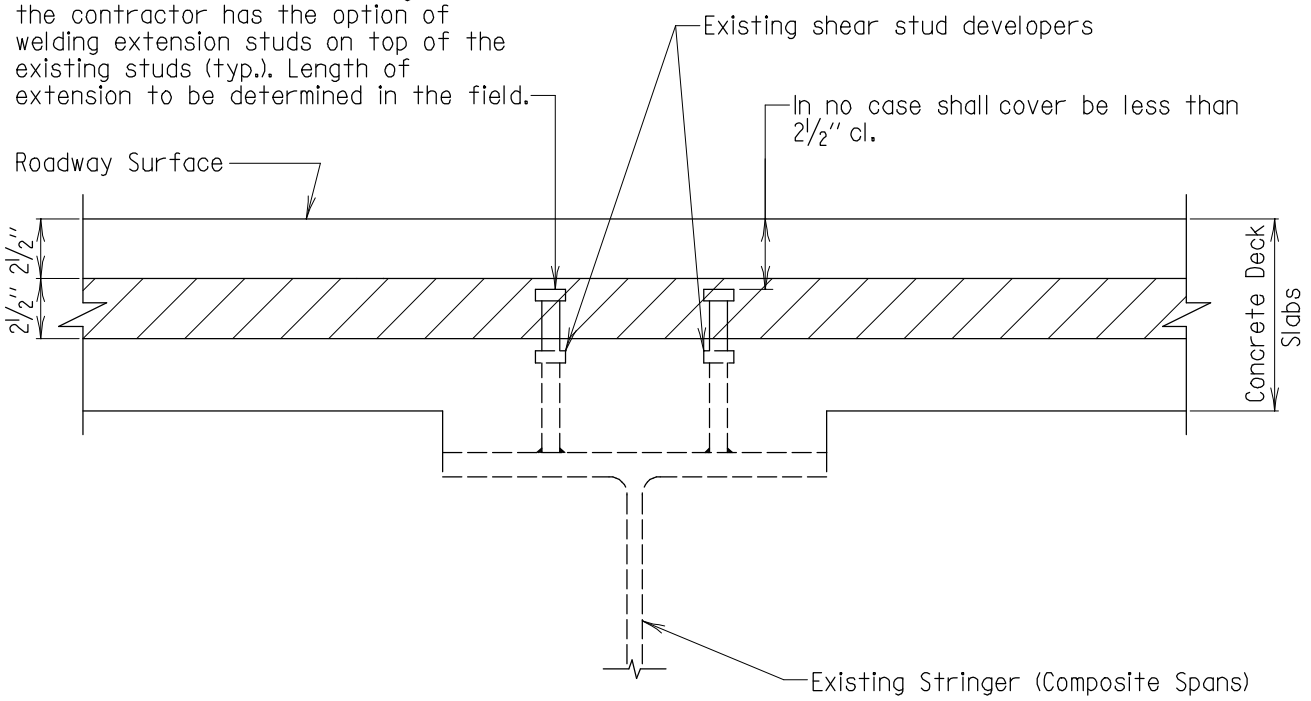

SECTION

Scale: 1½" = 1'-0"

Notes for Optional Extension Studs:

1. Extension studs are required in all areas where studs exist and top of stud does not extend into hatched area.
2. The diameter of the extension studs shall be the same as the existing studs.

APPROVAL	
R.S. Freedman DIRECTOR OFFICE OF STRUCTURES	
DATE: 7/26/79	
REVISIONS	
SHA	FHWA
10-13-87	12-1-87
10-25-90	
5-18-93	
5-19-11	

FHWA APPROVAL	
DATE: 7-19-11	

STATE OF MARYLAND
DEPARTMENT OF TRANSPORTATION
STATE HIGHWAY ADMINISTRATION
OFFICE OF STRUCTURES

DETAIL OF ADDITIONAL REINFORCEMENT AT EXISTING SHEAR STUD DEVELOPERS OR ADDITION OF STUD EXTENSIONS

STANDARD NO. SUP-SS(DR)-302 SHEET 1 OF 1

SUPERSTRUCUTRE STEEL

OLD NO. BR-SS(6.10)-79-76A

SUPERSTRUCTURE

CONCRETE GIRDER

(SUP-CG)

SUPERSTRUCTURE

CONCRETE GIRDER

GENERAL

(SUP-CG(GEN))

GENERAL NOTES

1. All reinforcing (except prestressing strands) in prestressed girders shall be epoxy coated and conform to ASTM A 615 or A 706, Grade 60.

2. At the request of the Contractor, alternate reinforcing details will be considered subject to the approval of the Engineer. All proposed changes will be subject to the notes provided on this sheet. No additional compensation will be allowed, regardless of acceptance or rejection of the alternate type.

3. Clear cover for reinforcing can be reduced to $1\frac{1}{4}''$ on #4 bars and $1\frac{1}{8}''$ on #5 bars for any bar in the top flange.

4. Horizontal splices are allowed for transverse bars in the top and bottom flanges.

5. Vertical splices are prohibited in the main shear stirrups.

6. A 180 or 90 degree hook that conforms to standard no. REBAR-DL-203 must be used on the bottom of every main shear stirrup. This hook can be placed either transverse or longitudinal to the beam. Main shear stirrup bars without hooks at the bottom are prohibited.

7. The main shear stirrup cannot flare out to the sides of the flanges except for the hook at the bottom of the girder.

8. A hook of 180 degrees is required for any bar that protrudes out of the girder.

Useable DRAFT

* USEABLE DRAFT *

APPROVAL		
_____ DEPUTY CHIEF ENGR. BRIDGE DEVEL. DATE: 09/01/15		
REVISIONS		
SHA	FHWA	
FHWA APPROVAL		
DATE:		

STATE OF MARYLAND
DEPARTMENT OF TRANSPORTATION
STATE HIGHWAY ADMINISTRATION
OFFICE OF BRIDGE DEVELOPMENT

TYPICAL REINFORCING DETAIL FOR PRESTRESSED CONCRETE GIRDERS GENERAL NOTES

NO. SUP-CG-101 SHEET 1 OF 1

SUPERSTRUCTURE CONCRETE GIRDER

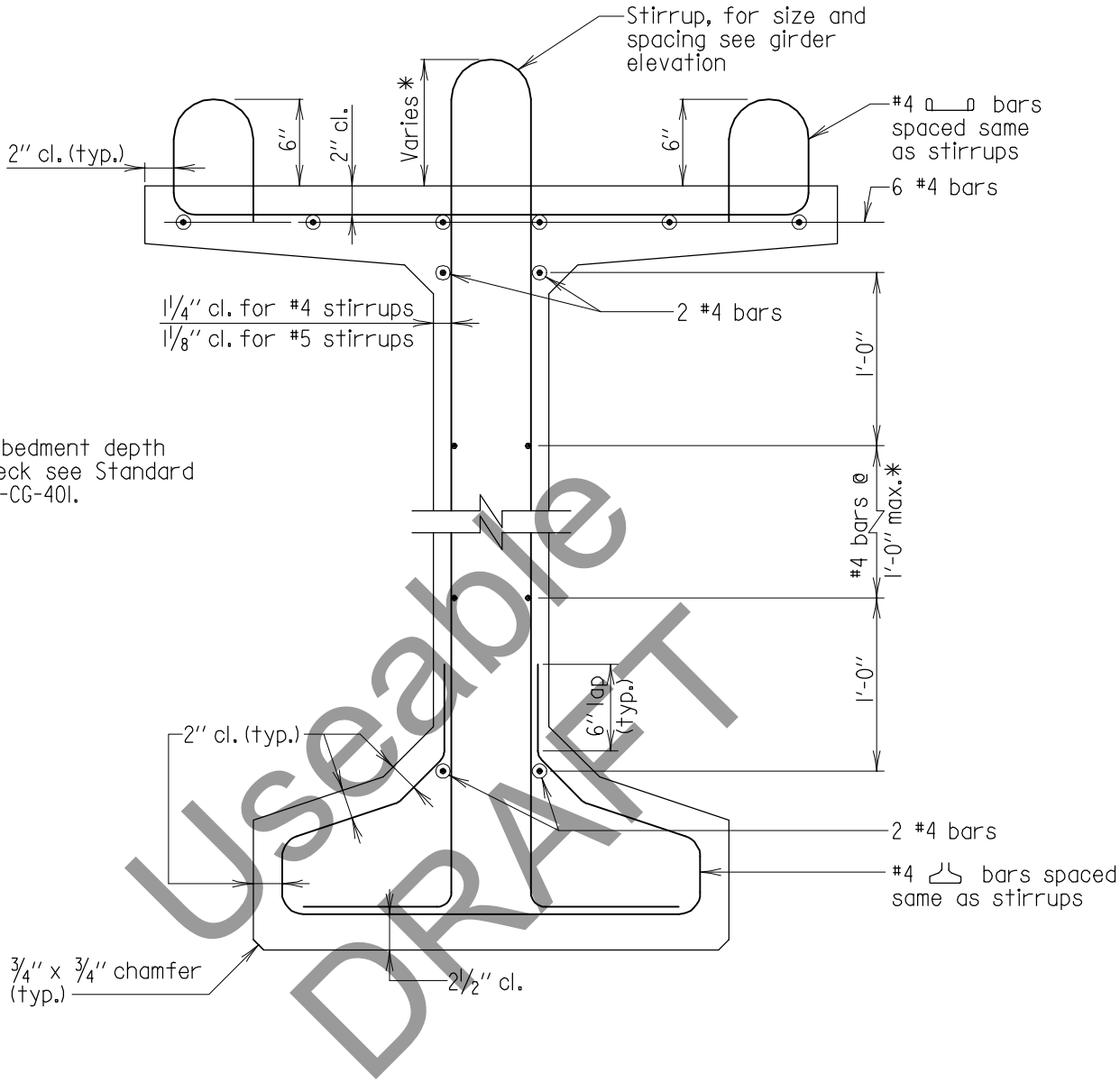

* For embedment depth into deck see Standard No. SUP-CG-401.

Useable DRAFT

TYPICAL REINFORCING DETAIL

Scale: 1" = 1'-0"

* These bars may be discontinuous to allow for passage of deflected strands in girder web.

Note:
Prestressing steel and additional bars at piers not shown.

* USEABLE DRAFT *

APPROVAL	
_____ DEPUTY CHIEF ENGR. BRIDGE DEVEL.	
DATE: 09/01/15	
REVISIONS	
SHA	FHWA
FHWA APPROVAL	
DATE:	

STATE OF MARYLAND
DEPARTMENT OF TRANSPORTATION
STATE HIGHWAY ADMINISTRATION
OFFICE OF BRIDGE DEVELOPMENT

TYPICAL REINFORCING DETAIL FOR PCEF BULB TEE PRESTRESSED CONCRETE GIRDERS

NO. SUP-CG-102 SHEET 1 OF 1

SUPERSTRUCTURE CONCRETE GIRDER

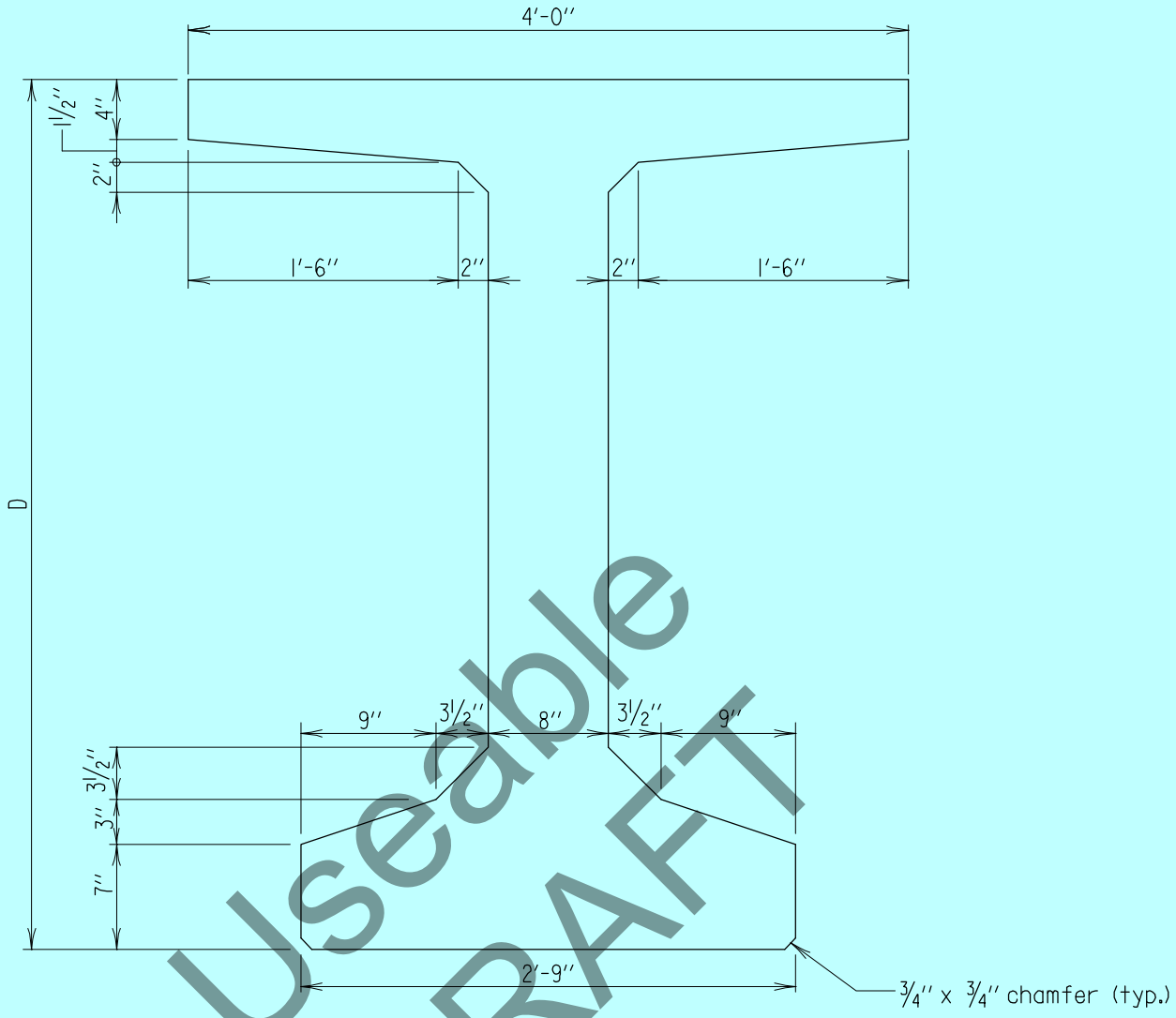

TYPICAL DIMENSION DETAIL

Scale: 1" = 1'-0"

Useable DRAFT

BASIC BEAM PROPERTIES							
D (in)	Volume (CY/FT)	Area (in. 2)	Y_B (in.)	I (in. 4)	Z_t (in. 3)	Z_b (in. 3)	WT/FT KLF
29	0.171	664	14.65	68856	4800	4699	0.691
37	0.187	728	18.43	130254	7016	7066	0.758
45	0.204	792	22.25	214879	9445	9658	0.825
53	0.220	856	26.09	324792	12070	12448	0.891
61	0.237	920	29.96	462050	14884	15424	0.958
69	0.253	984	33.84	628709	17880	18580	1.025
77	0.269	1048	37.73	826821	21057	21912	1.091
85	0.286	1112	41.64	1058440	24412	25417	1.158
93	0.302	1176	45.56	1325617	27944	29095	1.225

* USEABLE DRAFT *
FOR OFFICE USE ONLY

Note:
Prestressing steel and reinforcing steel not shown.

APPROVAL

_____ DEPUTY CHIEF ENGR. BRIDGE DEVEL.

DATE: 09/01/15

REVISIONS

SHA	FHWA

FHWA APPROVAL
DATE:

STATE OF MARYLAND
DEPARTMENT OF TRANSPORTATION
STATE HIGHWAY ADMINISTRATION
OFFICE OF BRIDGE DEVELOPMENT

SECTION PROPERTIES FOR PCEF BULB TEE PRESTRESSED CONCRETE GIRDERS WITH 7" THICK BOTTOM FLANGES

NO. SUP-CG-201

SHEET 1 OF 1

SUPERSTRUCTURE CONCRETE GIRDER

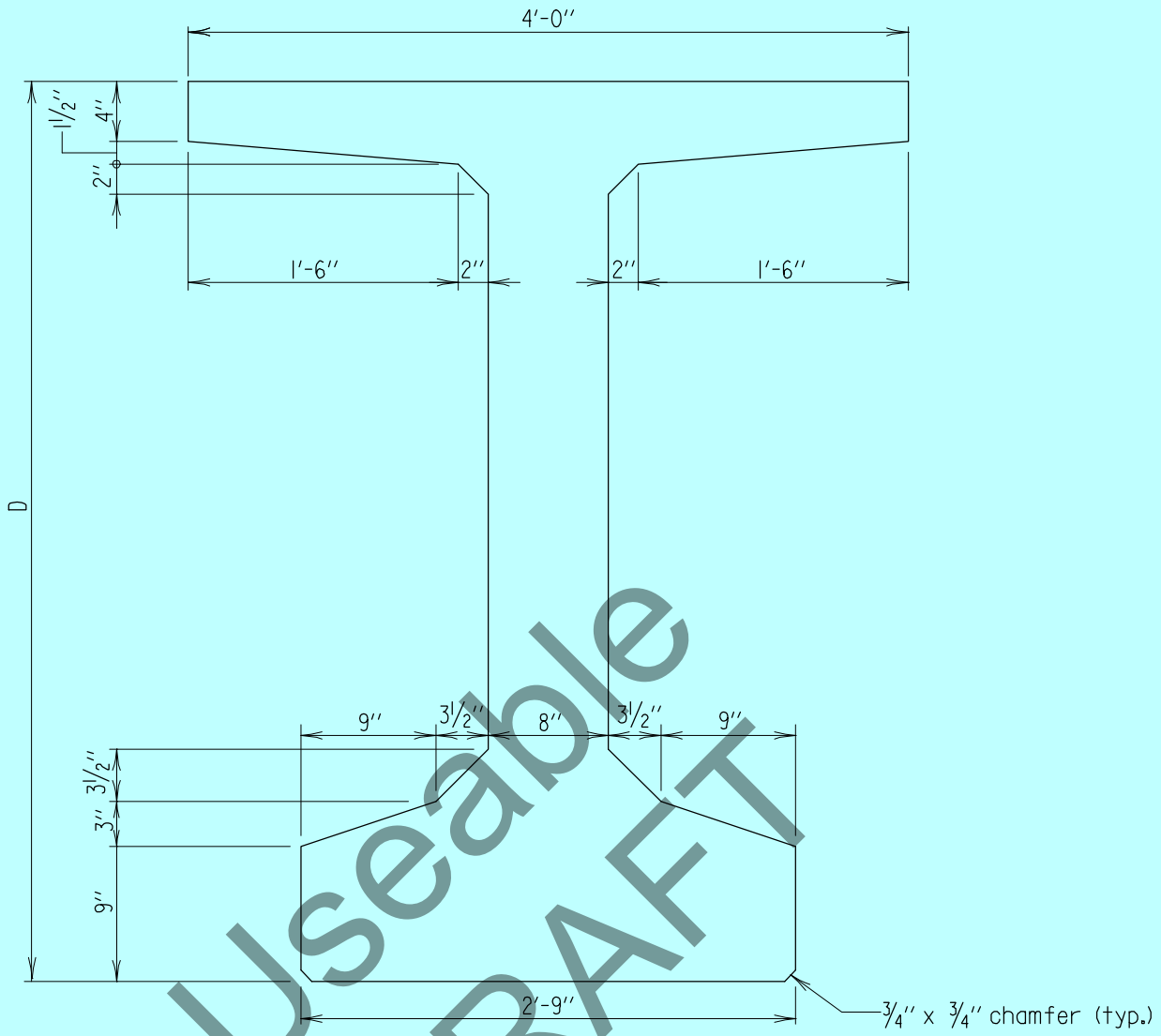

TYPICAL DIMENSION DETAIL

Scale: 1" = 1'-0"

Useable DRAFT

BASIC BEAM PROPERTIES							
D (in)	Volume (CY/FT)	Area (in. 2)	Y_B (in.)	I (in. 4)	Z_t (in. 3)	Z_b (in. 3)	WT/FT KLF
31	0.188	730	15.24	83558	5483	5483	0.760
39	0.204	794	18.82	153090	7586	8135	0.827
47	0.221	858	22.46	247781	10097	11032	0.893
55	0.237	922	26.15	369729	12817	14137	0.960
63	0.254	986	29.88	521018	15733	17435	1.027
71	0.270	1050	33.65	703724	18841	20914	1.093
79	0.286	1114	37.44	919917	22135	24570	1.160
87	0.303	1178	41.25	1171662	25612	28401	1.227
95	0.319	1242	45.09	1461020	29272	32404	1.293

* USEABLE DRAFT *
FOR OFFICE USE ONLY

Note:
Prestressing steel and reinforcing steel not shown.

APPROVAL

_____ DEPUTY CHIEF ENGR. BRIDGE DEVEL.

DATE: 09/01/15

REVISIONS

SHA	FHWA

FHWA APPROVAL
DATE:

STATE OF MARYLAND
DEPARTMENT OF TRANSPORTATION
STATE HIGHWAY ADMINISTRATION
OFFICE OF BRIDGE DEVELOPMENT

SECTION PROPERTIES FOR PCEF BULB TEE PRESTRESSED CONCRETE GIRDERS WITH 9" THICK BOTTOM FLANGES

NO. SUP-CG-202 SHEET 1 OF 1

SUPERSTRUCTURE CONCRETE GIRDER

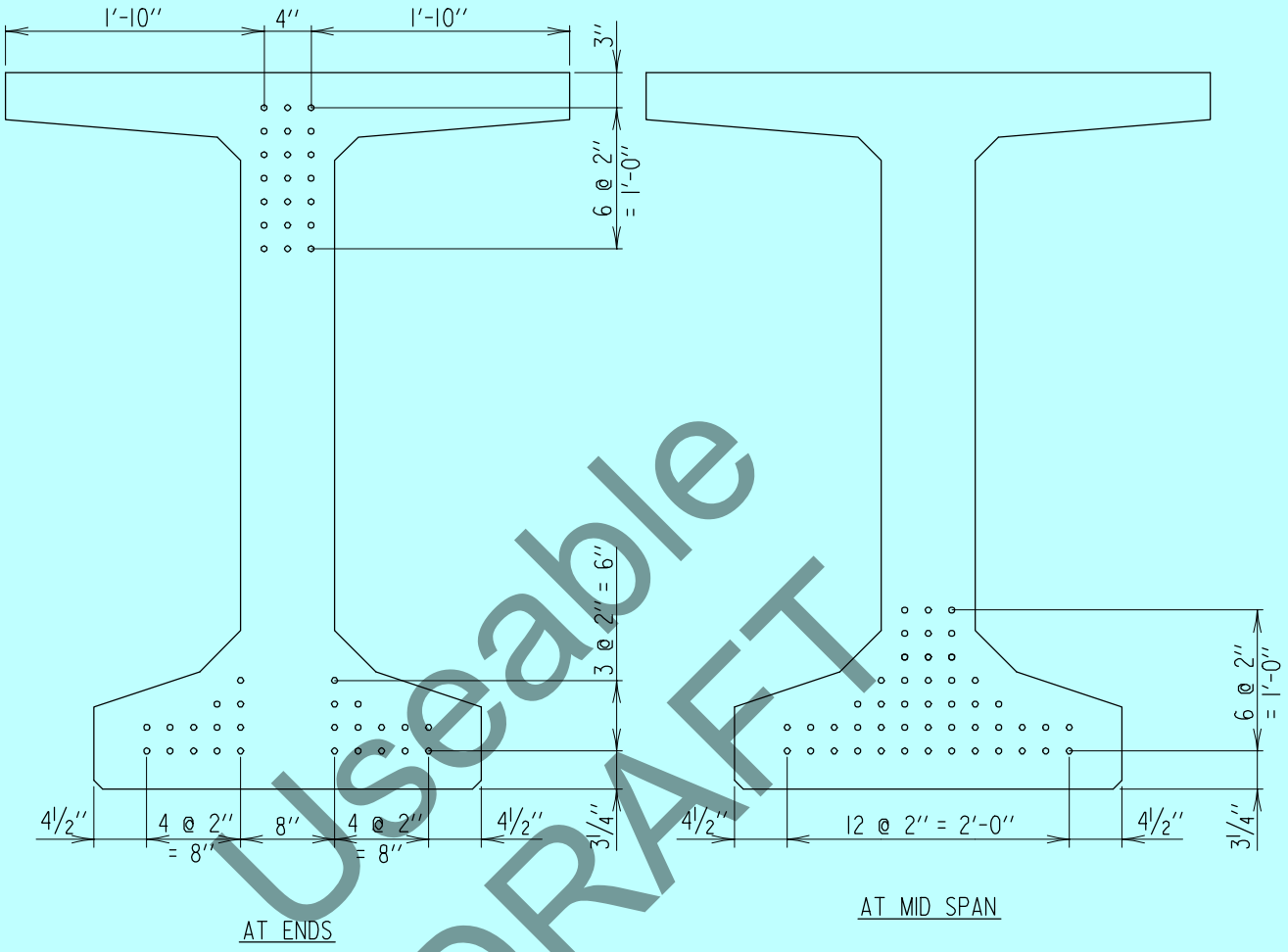

TYPICAL SPACING OF STRANDS

Scale: 3/4" = 1'-0"

Useable DRAFT

Notes:

1. Reinforcing steel bars not shown.
2. Details show maximum number of strand locations. Not all locations will be filled for each girder.
3. The designer shall determine the number of strands based on design loads. Strand shall be placed starting at the bottom row and working upward as needed.
4. Some strands in the girder web locations shall be harped as needed at approximately the 4/10 and 6/10 points along the span length.
5. If more than 12 strands are harped, the harped strands shall be broken into two groups. The harping points shall be separated by approximately 5'-0".

* USEABLE DRAFT *
FOR OFFICE USE ONLY

APPROVAL	
_____ DEPUTY CHIEF ENGR. BRIDGE DEVEL.	
DATE: 09/01/15	
REVISIONS	
SHA	FHWA

FHWA APPROVAL
DATE:

STATE OF MARYLAND
DEPARTMENT OF TRANSPORTATION
STATE HIGHWAY ADMINISTRATION
OFFICE OF BRIDGE DEVELOPMENT

TYPICAL SPACING OF STRANDS FOR PCEF BULB TEE PRESTRESSED CONCRETE GIRDERS WITH 7" THICK BOTTOM FLANGES

NO. SUP-CG-301 SHEET 1 OF 1

SUPERSTRUCTURE CONCRETE GIRDER

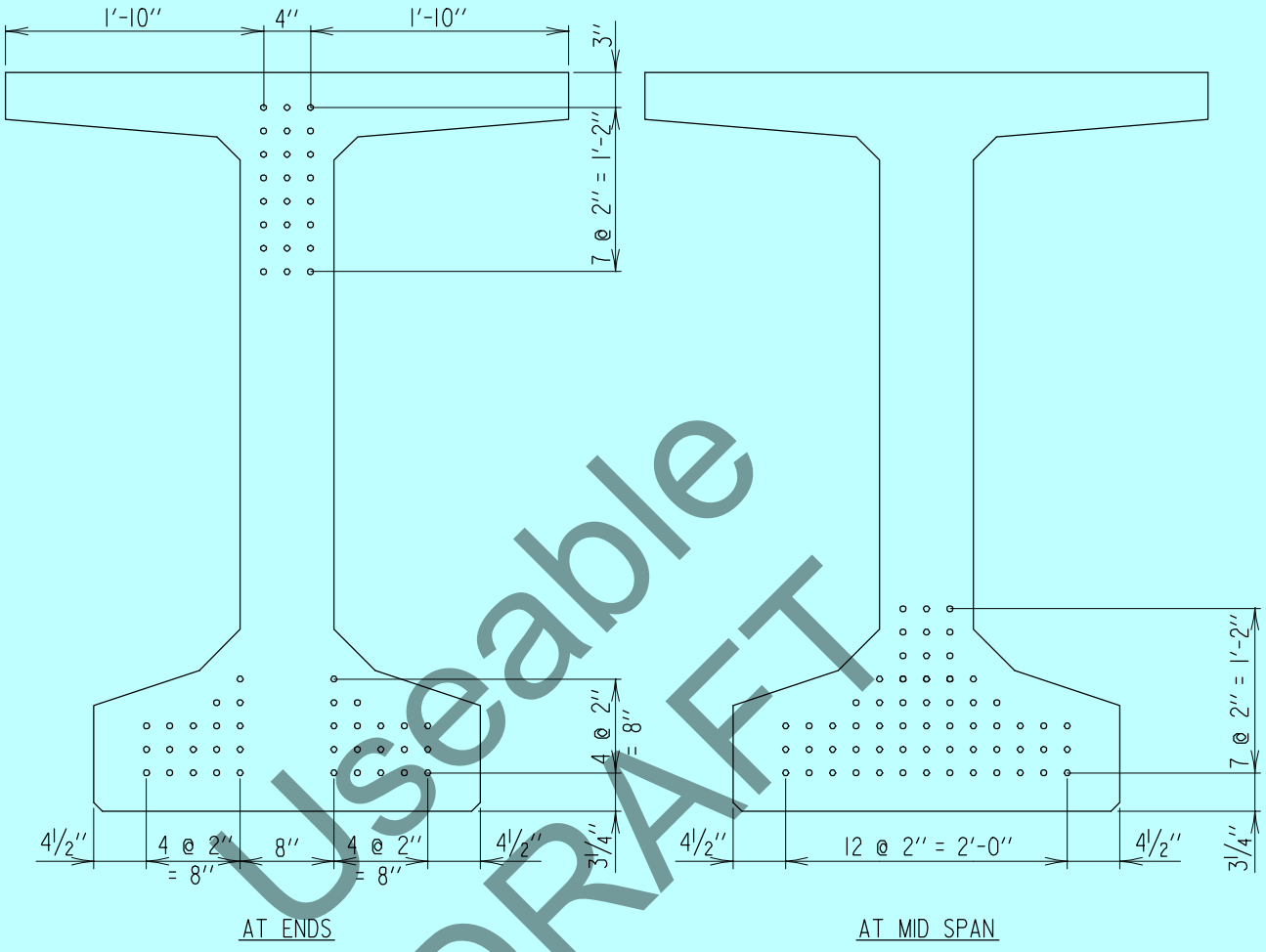

TYPICAL SPACING OF STRANDS

Scale: ¾" = 1'-0"

Useable DRAFT

Notes:

1. Reinforcing steel bars not shown.
2. Details show maximum number of strand locations. Not all locations will be filled for each girder.
3. The designer shall determine the number of strands based on design loads. Strand shall be placed starting at the bottom row and working upward as needed.
4. Some strands in the girder web locations shall be harped as needed at approximately the 4/10 and 6/10 points along the span length.
5. If more than 12 strands are harped, the harped strands shall be broken into two groups. The harping points shall be separated by approximately 5'-0".

* USEABLE DRAFT *
FOR OFFICE USE ONLY

APPROVAL	
_____ DEPUTY CHIEF ENGR. BRIDGE DEVEL. DATE: 09/01/15	
REVISIONS	
SHA	FHWA

FHWA APPROVAL
DATE:

STATE OF MARYLAND
DEPARTMENT OF TRANSPORTATION
STATE HIGHWAY ADMINISTRATION
OFFICE OF BRIDGE DEVELOPMENT

TYPICAL SPACING OF STRANDS FOR PCEF BULB TEE PRESTRESSED CONCRETE GIRDERS WITH 9" THICK BOTTOM FLANGES

NO. SUP-CG-302 SHEET 1 OF 1

SUPERSTRUCTURE CONCRETE GIRDER

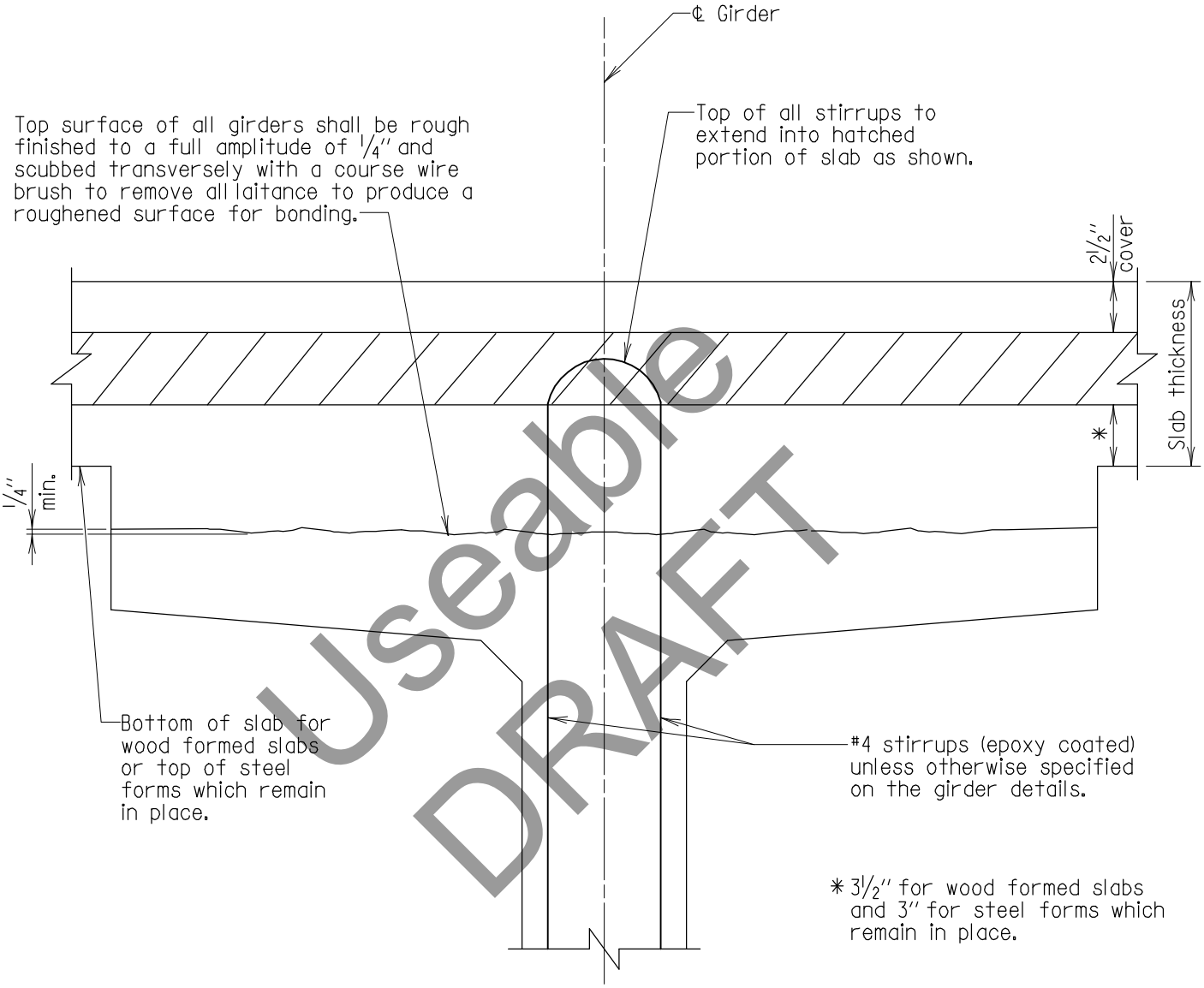

SECTION
Scale: 1 1/2'' = 1'-0''

Useable DRAFT

Note:
For prestressd concrete girder stirrup spacing and details, see pertinent superstructure sheets.

* USEABLE DRAFT *

APPROVAL	
_____ DEPUTY CHIEF ENGR. BRIDGE DEVEL.	
DATE: 09/01/15	
REVISIONS	
SHA	FHWA
FHWA APPROVAL	
DATE:	

STATE OF MARYLAND
DEPARTMENT OF TRANSPORTATION
STATE HIGHWAY ADMINISTRATION
OFFICE OF BRIDGE DEVELOPMENT

PRESTRESSED CONCRETE GIRDER
TOP FINISH AND STIRRUP EMBEDMENT DETAIL

NO. SUP-CG-401 SHEET 1 OF 1

SUPERSTRUCTURE CONCRETE GIRDER

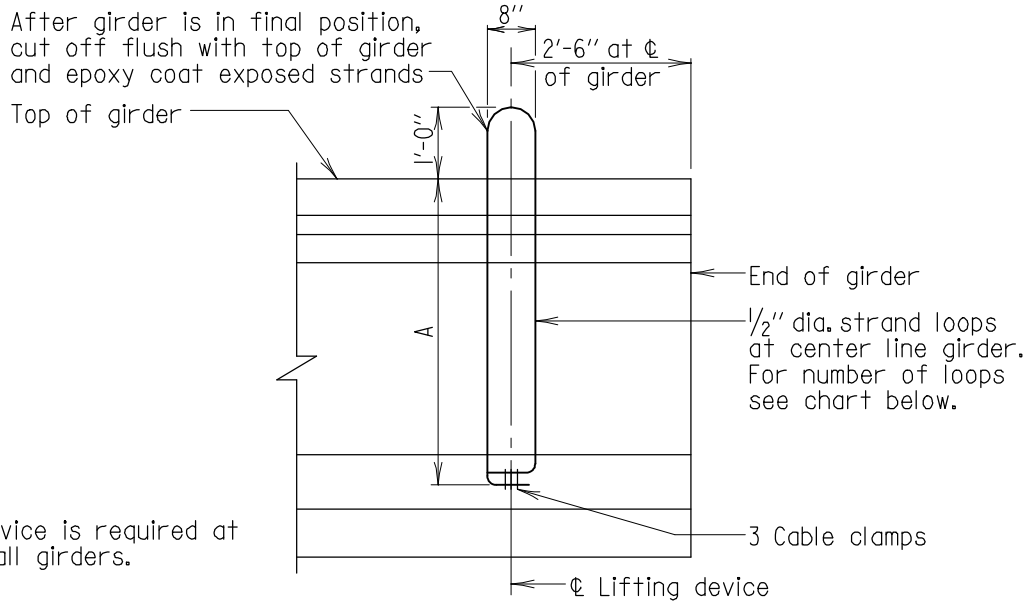

Note:
One lifting device is required at each end of all girders.

GIRDER LIFTING DEVICE DETAIL

Scale: 3/8" = 1'-0"

GIRDER LIFTING DETAIL CHART		
Type of Girder	Number of Loops	Dimension "A"
AASHTO III (45")	3	3'-0"
AASHTO IV (54")	4	3'-6"
AASHTO V (63")	4	4'-3"
AASHTO VI (70")	4	4'-10"
PCEF 29"	3	2'-3"
PCEF 31"	3	2'-5"
PCEF 37" & 39"	3	2'-11"
PCEF 45" & 47"	3	2'-11"
PCEF 53" & 55"	4	3'-5"
PCEF 61" & 63"	4	4'-1"
PCEF 69" & 71"	4	4'-9"
PCEF 77" & 79"	4	5'-5"
PCEF 85" & 87"	4	6'-1"
PCEF 93" & 95"	4	6'-9"

Notes:
1. The lifting devices shown are designed with a minimum factor of safety of 2 for an assumed 180 ft. maximum girder length.
2. At the Contractor's option, alternate lifting details with a minimum factor of safety of 2 will be considered subject to the approval of the Engineer, befroe use.
3. All loops shall consist of 1/2" diameter 7-wire low relaxation strands conforming to the requirements of ASTM A416 grade 270.
4. The exact location of the lifting device may be altered to avoid all prestressing strands, stirrups, mild reinforcing steel and studs on plates as long as the embedment depth of the lifting device and a clear cover of 2" on each face of the web is maintained.

Useable DRAFT

* USEABLE DRAFT *

APPROVAL	
_____ DEPUTY CHIEF ENGR. BRIDGE DEVEL.	
DATE: 09/01/15	
REVISIONS	
SHA	FHWA
FHWA APPROVAL	
DATE:	

STATE OF MARYLAND
DEPARTMENT OF TRANSPORTATION
STATE HIGHWAY ADMINISTRATION
OFFICE OF BRIDGE DEVELOPMENT

LIFTING DEVICE DETAILS FOR PRESTRESSED CONCRETE GIRDERS

NO. SUP-CG-501 SHEET 1 OF 1

SUPERSTRUCTURE CONCRETE GIRDER

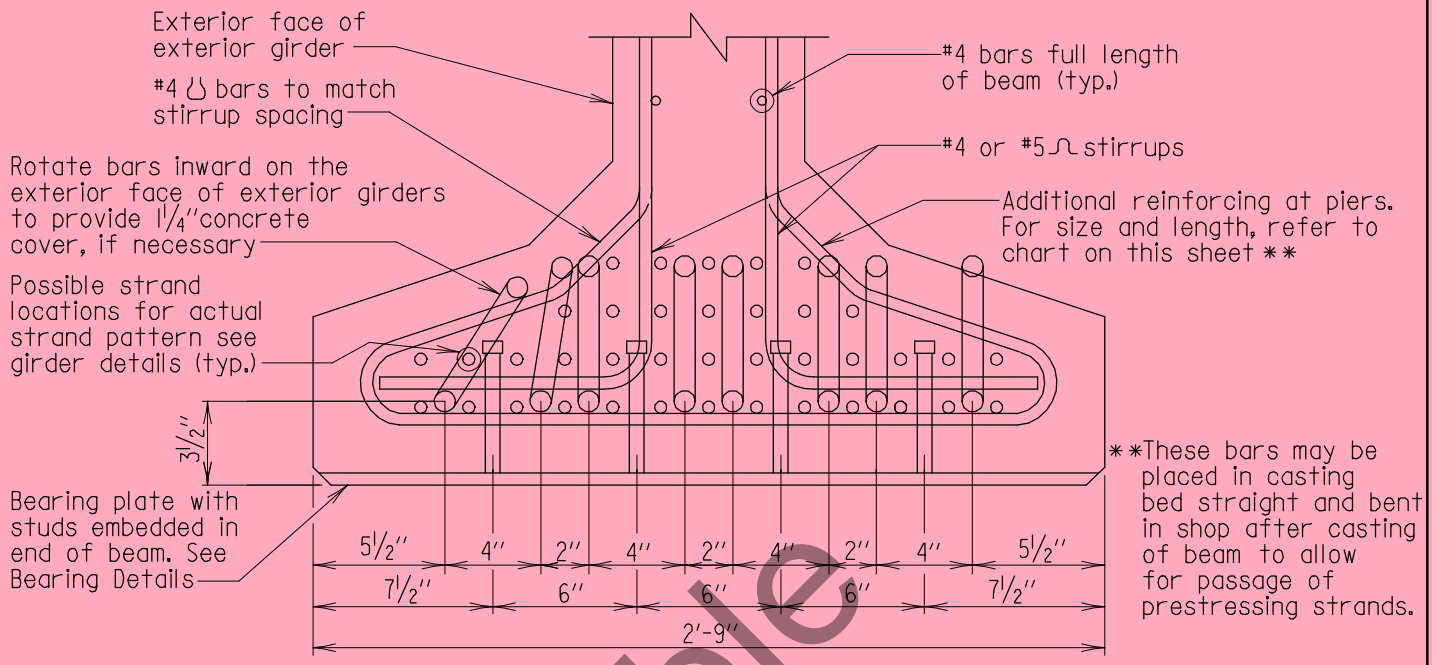

END OF BEAM REINFORCING SECTION AT PIER

Scale: 1½″ = 1′-0″

Bridge # _____ Description: _____		
Location	Development Length	Bar Size *
Pier _____		
Pier _____		
Pier _____		
Pier _____		
Pier _____		
Pier _____		

*All additional reinforcing bars to be #5 unless otherwise noted in this column.

* USEABLE DRAFT *

APPROVAL	
_____ DIRECTOR OFFICE OF BRIDGE DEVEL. DATE: 09/01/15	
REVISIONS	
SHA	FHWA
FHWA APPROVAL	
DATE:	

STATE OF MARYLAND
DEPARTMENT OF TRANSPORTATION
STATE HIGHWAY ADMINISTRATION
OFFICE OF BRIDGE DEVELOPMENT

PIER CONNECTION DETAILS FOR PCEF BULB TEE PRESTRESSED CONCRETE GIRDERS WITH 7″ BOTTOM FLANGES

NO. SUP-CG-601 SHEET 1 OF 2

Useable DRAFT

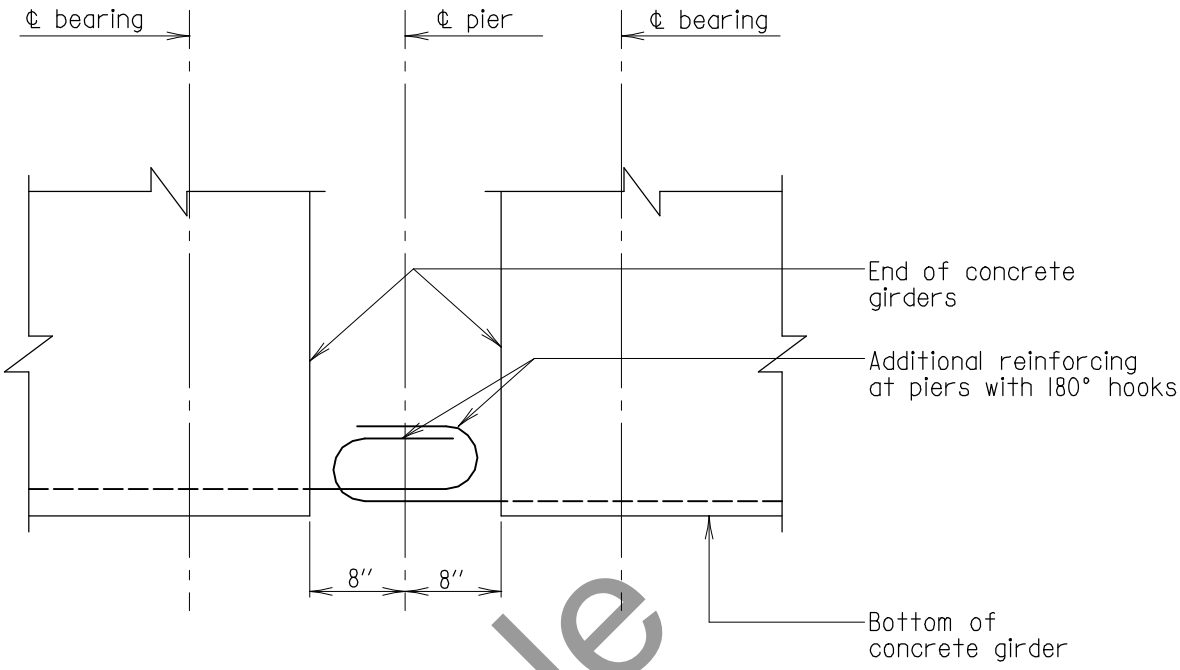

ELEVATION

Scale: 3/4″ = 1′-0″

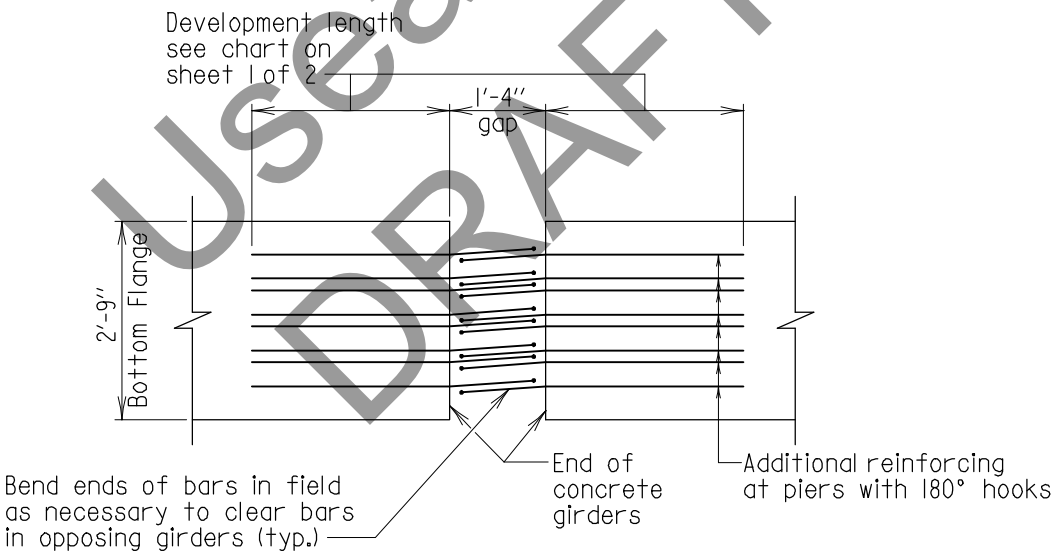

PIER CONNECTION PLAN VIEW

Scale: 3/8″ = 1′-0″

Useable DRAFT

Notes:
1. Prestressing strands, typical reinforcing, and studs not shown for clarity.
2. For bar size and development length see sheet 1 of 2.
3. For hook dimensions see Standard No. REBAR-DL-103.

* USEABLE DRAFT *

APPROVAL	
_____ DEPUTY CHIEF ENGR. BRIDGE DEVEL.	
DATE: 09/01/15	
REVISIONS	
SHA	FHWA

FHWA APPROVAL
DATE:

STATE OF MARYLAND
DEPARTMENT OF TRANSPORTATION
STATE HIGHWAY ADMINISTRATION
OFFICE OF BRIDGE DEVELOPMENT

PIER CONNECTION DETAILS FOR PCEF BULB TEE PRESTRESSED CONCRETE GIRDERS WITH 7″ BOTTOM FLANGES

NO. SUP-CG-601

SHEET 2 OF 2

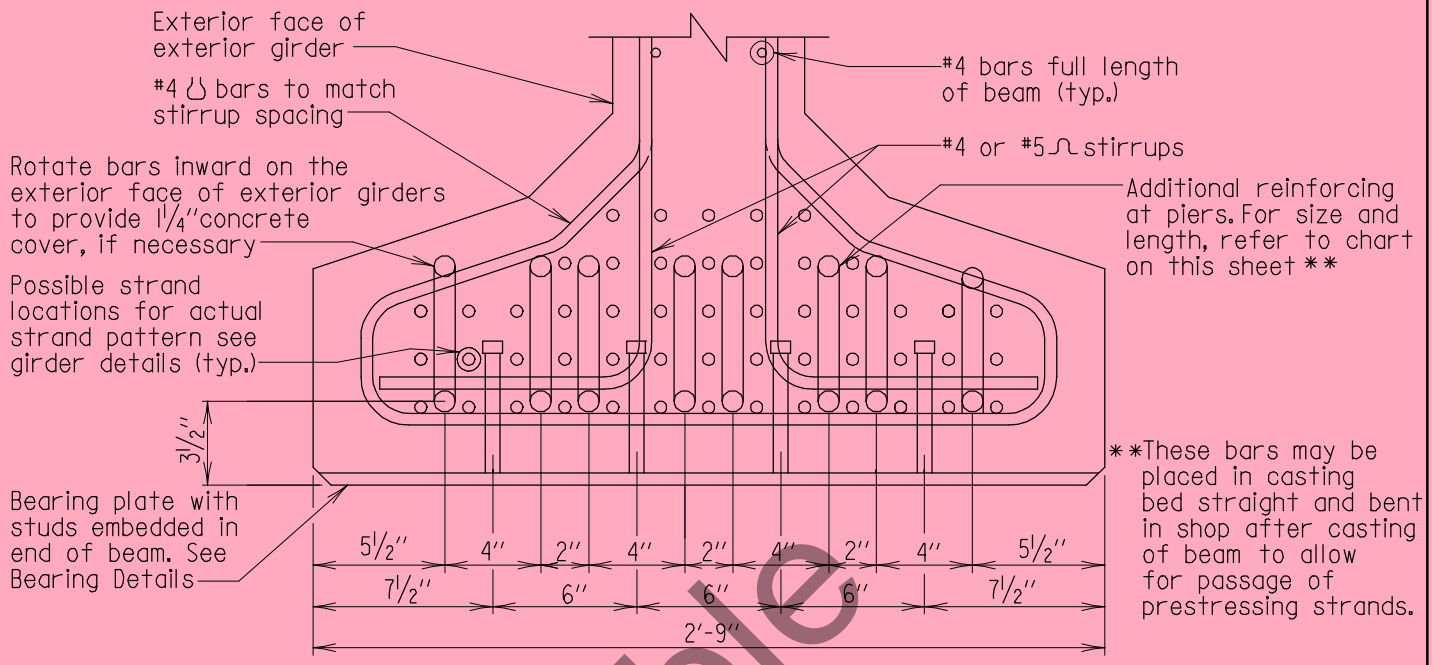

END OF BEAM REINFORCING SECTION AT PIER

Scale: 1½″ = 1′-0″

Bridge # _____ Description: _____		
Location	Development Length	Bar Size *
Pier _____		
Pier _____		
Pier _____		
Pier _____		
Pier _____		
Pier _____		

*All additional reinforcing bars to be #5 unless otherwise noted in this column.

* USEABLE DRAFT *

APPROVAL	
_____ DIRECTOR OFFICE OF BRIDGE DEVEL. DATE: 09/01/15	
REVISIONS	
SHA	FHWA

FHWA APPROVAL
DATE:

STATE OF MARYLAND
DEPARTMENT OF TRANSPORTATION
STATE HIGHWAY ADMINISTRATION
OFFICE OF BRIDGE DEVELOPMENT

PIER CONNECTION DETAILS FOR PCEF BULB TEE PRESTRESSED CONCRETE GIRDERS WITH 9″ BOTTOM FLANGES

NO. SUP-CG-602 SHEET 1 OF 2

Useable DRAFT

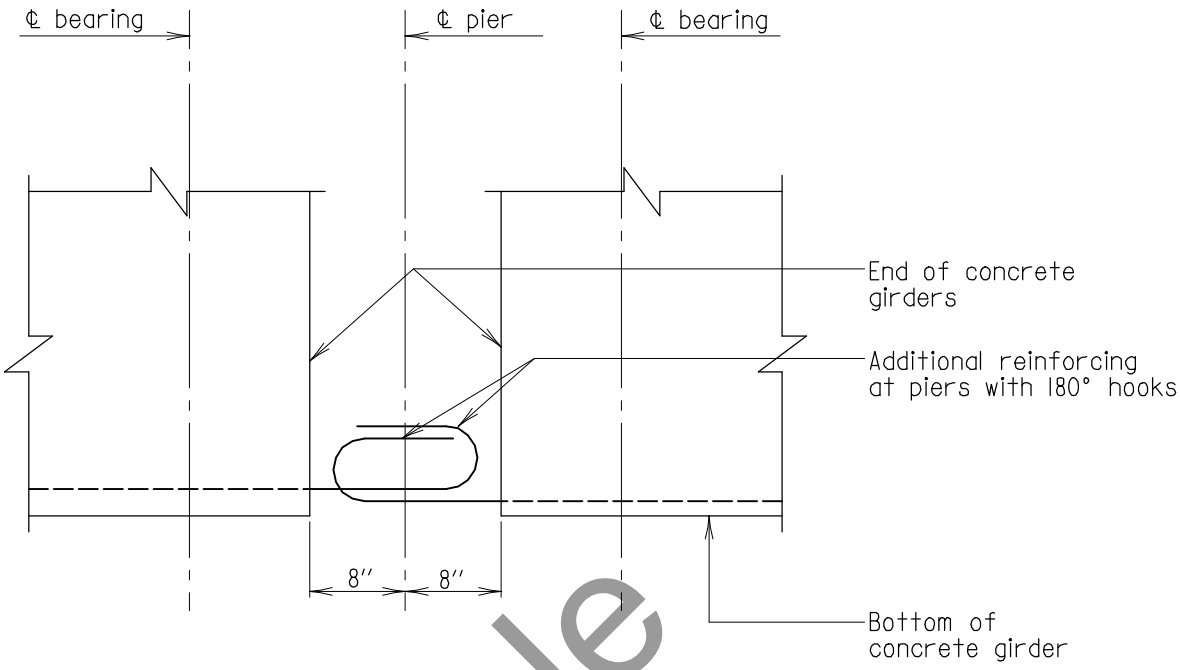

ELEVATION

Scale: 3/4″ = 1′-0″

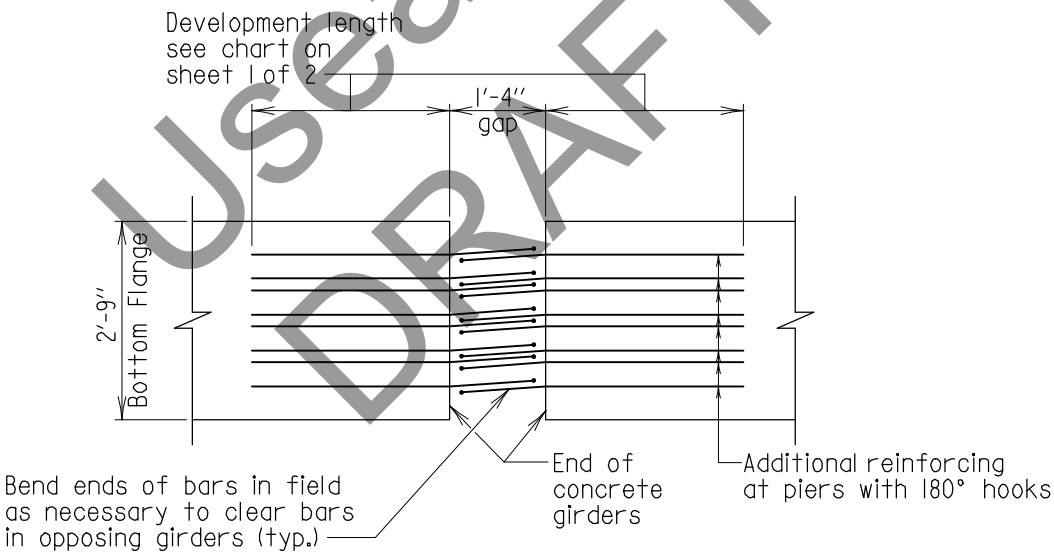

PIER CONNECTION PLAN VIEW

Scale: 3/8″ = 1′-0″

Useable DRAFT

Notes:
1. Prestressing strands, typical reinforcing, and studs not shown for clarity.
2. For bar size and development length see sheet 1 of 2.
3. For hook dimensions see Standard No. REBAR-DL-103.

* USEABLE DRAFT *

APPROVAL	
_____ DEPUTY CHIEF ENGR. BRIDGE DEVEL.	
DATE: 09/01/15	
REVISIONS	
SHA	FHWA

FHWA APPROVAL
DATE:

STATE OF MARYLAND
DEPARTMENT OF TRANSPORTATION
STATE HIGHWAY ADMINISTRATION
OFFICE OF BRIDGE DEVELOPMENT

PIER CONNECTION DETAILS FOR PCEF BULB TEE PRESTRESSED CONCRETE GIRDERS WITH 9″ BOTTOM FLANGES

NO. SUP-CG-602

SHEET 2 OF 2

SUPERSTRUCTURE

CONCRETE GIRDER

INTERMEDIATE DIAPHRAGMS

(SUP-CG(DIA))

Notes:
1. For Section A-A see sheet 2 of 3.
2. Normal concrete girder, slab and parapet reinforcing not shown.
3. All reinforcing steel, threaded bars and threaded inserts shall be epoxy coated.

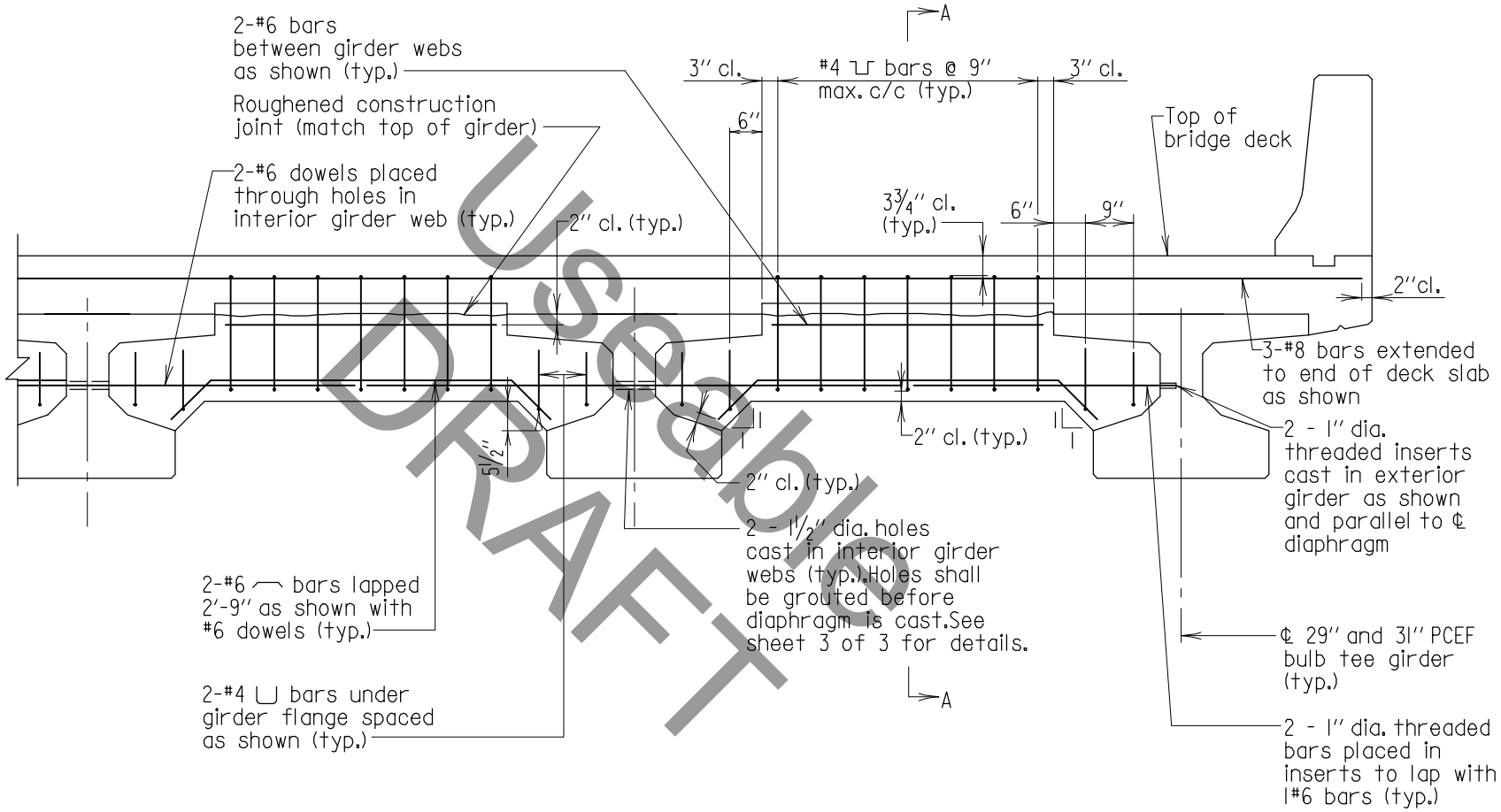

INTERMEDIATE DIAPHRAGM - ELEVATION
Scale: ⅜" = 1'-0"

Usable DRAFT

FHWA APPROVAL
DATE:

APPROVAL
OFFICE OF BRIDGE DEVEL. DIRECTOR
DATE: 09/01/15

REVISIONS
SHA
FHWA

STATE OF MARYLAND
DEPARTMENT OF TRANSPORTATION
STATE HIGHWAY ADMINISTRATION
OFFICE OF BRIDGE DEVELOPMENT

INTERMEDIATE DIAPHRAGM FOR
29" AND 31" PCEF BULB TEE GIRDER

NO. SUP-CG(DIA)-101

SHEET 1 OF 3

* USEABLE DRAFT *

SUPERSTRUCTURE CONCRETE GIRDER

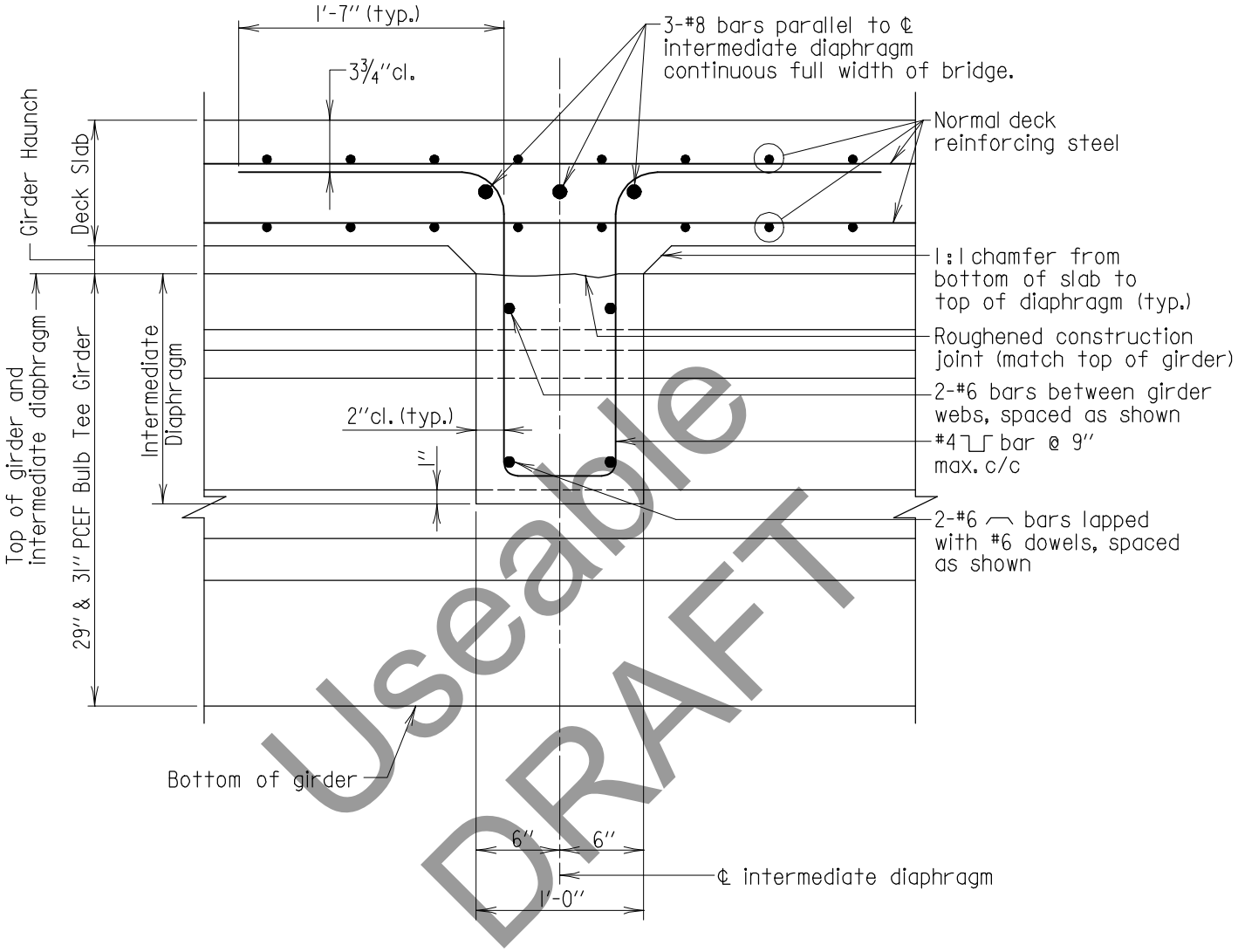

Useable DRAFT

SECTION A-A
Scale: 1" = 1'-0"

Notes:
1. All reinforcing steel and threaded bars shall be epoxy coated.
2. All reinforcing steel in girders shall be spaced to miss holes and threaded inserts in web.
3. Intermediate diaphragms shall be in place at least 40 hours prior to placement of deck.

* USEABLE DRAFT *

APPROVAL	
_____ DIRECTOR OFFICE OF BRIDGE DEVEL.	
DATE: 09/01/15	
REVISIONS	
SHA	FHWA

FHWA APPROVAL
DATE:

STATE OF MARYLAND
DEPARTMENT OF TRANSPORTATION
STATE HIGHWAY ADMINISTRATION
OFFICE OF BRIDGE DEVELOPMENT

INTERMEDIATE DIAPHRAGM FOR
29" AND 31" PCEF BULB TEE GIRDER

NO. SUP-CG(DIA)-101 SHEET 2 OF 3

SUPERSTRUCTURE CONCRETE GIRDER

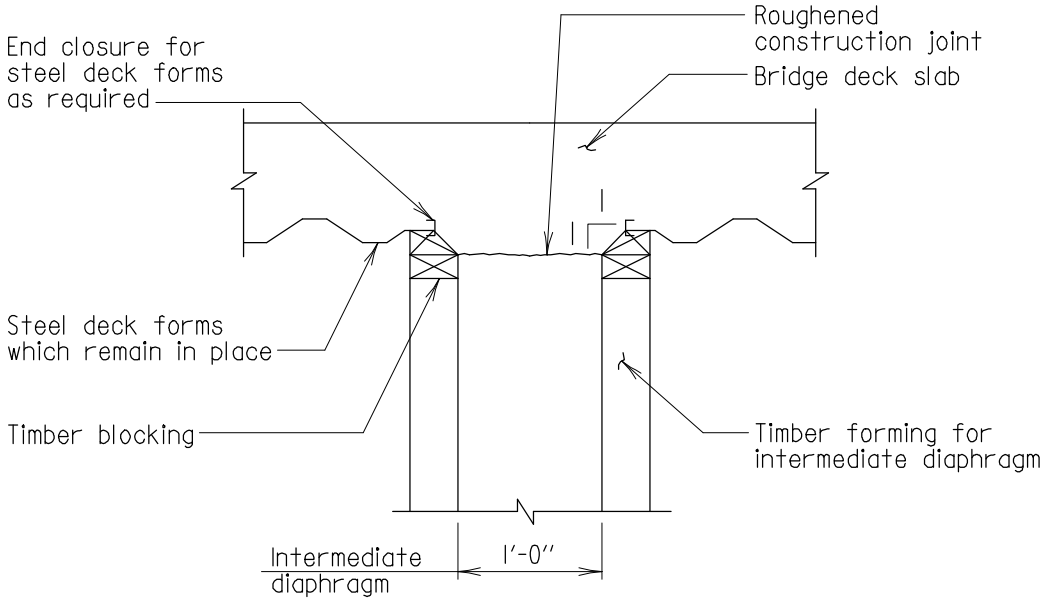

DECK FORMING DETAIL AT INTERMEDIATE DIAPHRAGM

Scale: 3/4" = 1'-0"

Useable DRAFT

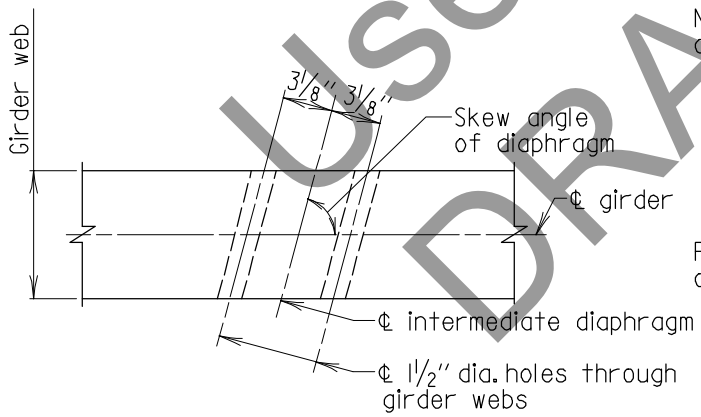

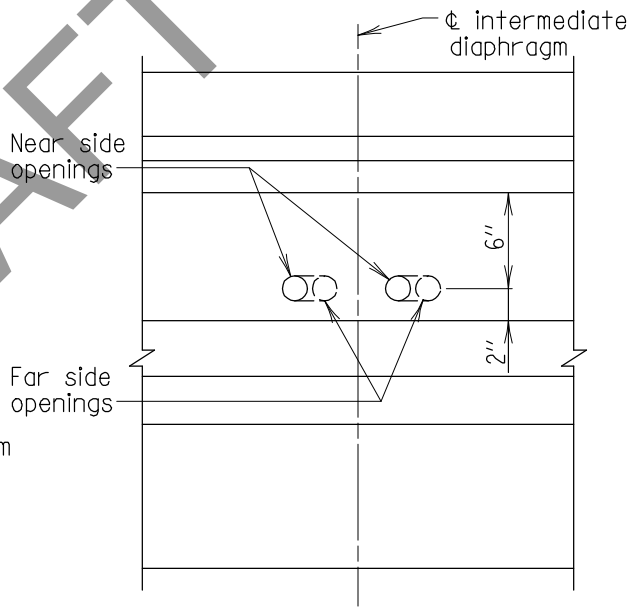

Note:
Holes shall be cast parallel to ℄ diaphragm and follow the slope of the bottom of the diaphragm.

PLAN

ELEVATION

DIAPHRAGM HOLE DETAIL

Scale: 1" = 1'-0"

* USEABLE DRAFT *

APPROVAL	
_____ DIRECTOR OFFICE OF BRIDGE DEVEL. DATE: 09/01/15	
REVISIONS	
SHA	FHWA

FHWA APPROVAL
DATE:

STATE OF MARYLAND
DEPARTMENT OF TRANSPORTATION
STATE HIGHWAY ADMINISTRATION
OFFICE OF BRIDGE DEVELOPMENT

INTERMEDIATE DIAPHRAGM FOR 29" AND 31" PCEF BULB TEE GIRDER

NO. SUP-CG(DIA)-101 SHEET 3 OF 3

SUPERSTRUCTURE CONCRETE GIRDER

Notes:
1. For Section A-A see sheet 2 of 3.
2. Normal concrete girder, slab and parapet reinforcing not shown.
3. All reinforcing steel, threaded bars and threaded inserts shall be epoxy coated.

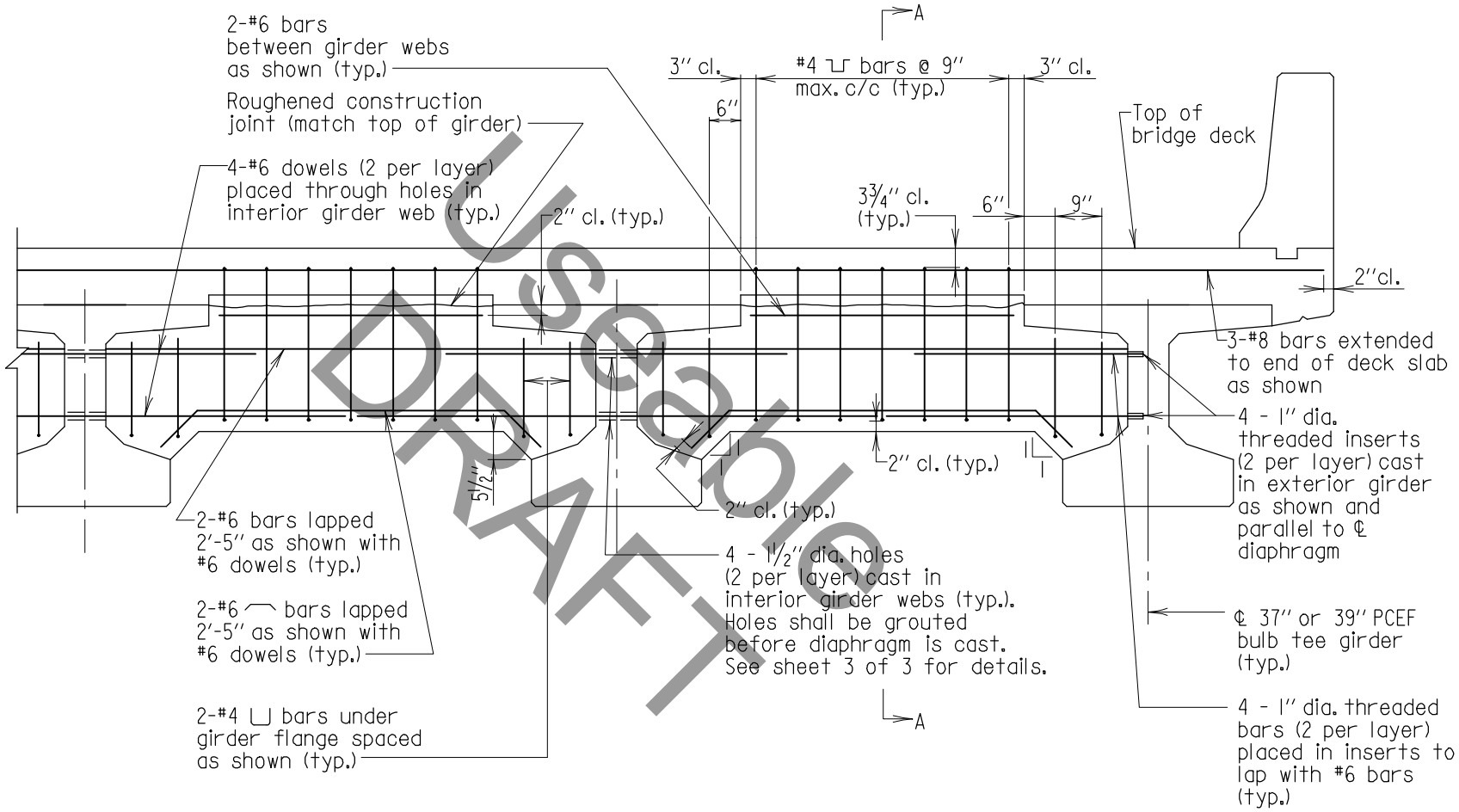

INTERMEDIATE DIAPHRAGM - ELEVATION
Scale: ⅜" = 1'-0"

Useable DRAFT

FHWA APPROVAL
DATE:

APPROVAL
OFFICE OF BRIDGE DEVEL. DIRECTOR
DATE: 09/01/15

REVISIONS
SHA
FHWA

STATE OF MARYLAND
DEPARTMENT OF TRANSPORTATION
STATE HIGHWAY ADMINISTRATION
OFFICE OF BRIDGE DEVELOPMENT

INTERMEDIATE DIAPHRAGM FOR
37" AND 39" PCEF BULB TEE GIRDERS

NO. SUP-CG(DIA)-102

SHEET 1 OF 3

* USEABLE DRAFT *

SUPERSTRUCTURE CONCRETE GIRDER

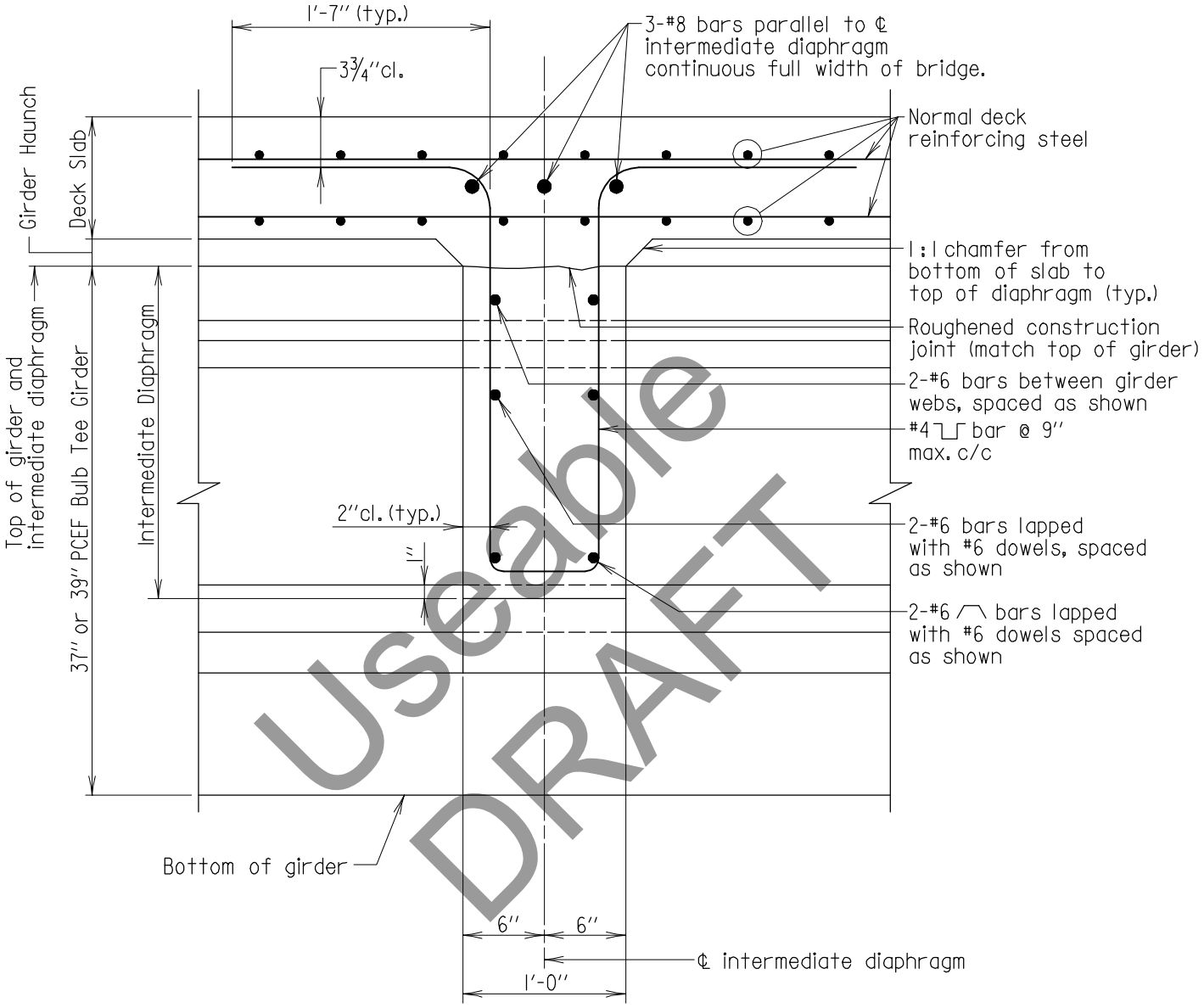

Useable DRAFT

SECTION A-A
Scale: 1" = 1'-0"

Notes:
1. All reinforcing steel and threaded bars shall be epoxy coated.
2. All reinforcing steel in girders shall be spaced to miss holes and threaded inserts in web.
3. Intermediate diaphragms shall be in place at least 40 hours prior to placement of deck.

* USEABLE DRAFT *

APPROVAL	
_____ DIRECTOR OFFICE OF BRIDGE DEVEL.	
DATE: 09/01/15	
REVISIONS	
SHA	FHWA

FHWA APPROVAL
DATE:

STATE OF MARYLAND
DEPARTMENT OF TRANSPORTATION
STATE HIGHWAY ADMINISTRATION
OFFICE OF BRIDGE DEVELOPMENT

INTERMEDIATE DIAPHRAGM FOR
37" AND 39" PCEF BULB TEE GIRDERS

NO. SUP-CG(DIA)-102 SHEET 2 OF 3

SUPERSTRUCTURE CONCRETE GIRDER

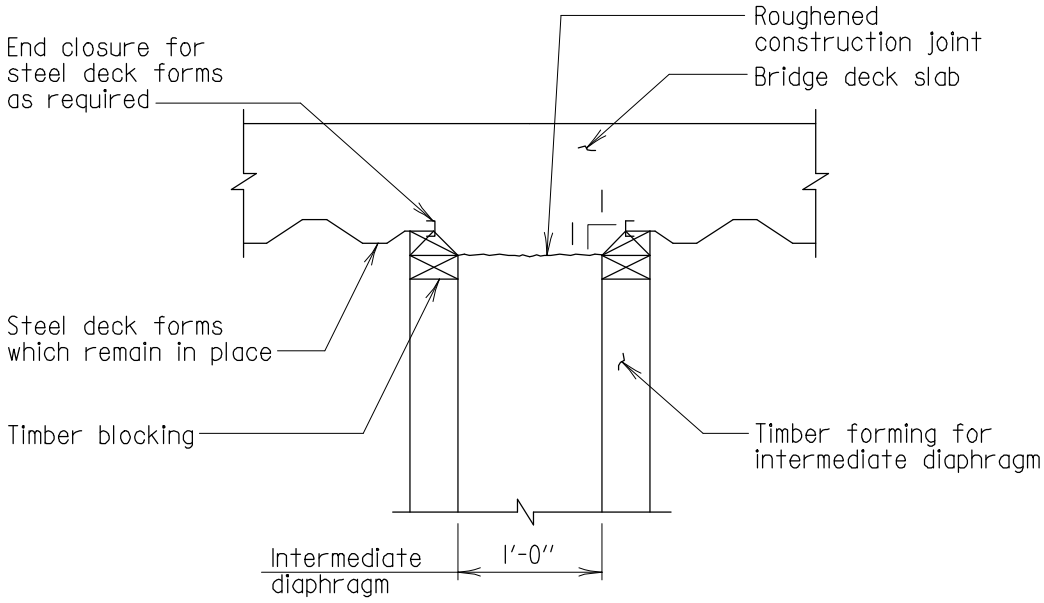

DECK FORMING DETAIL AT INTERMEDIATE DIAPHRAGM

Scale: 3/4" = 1'-0"

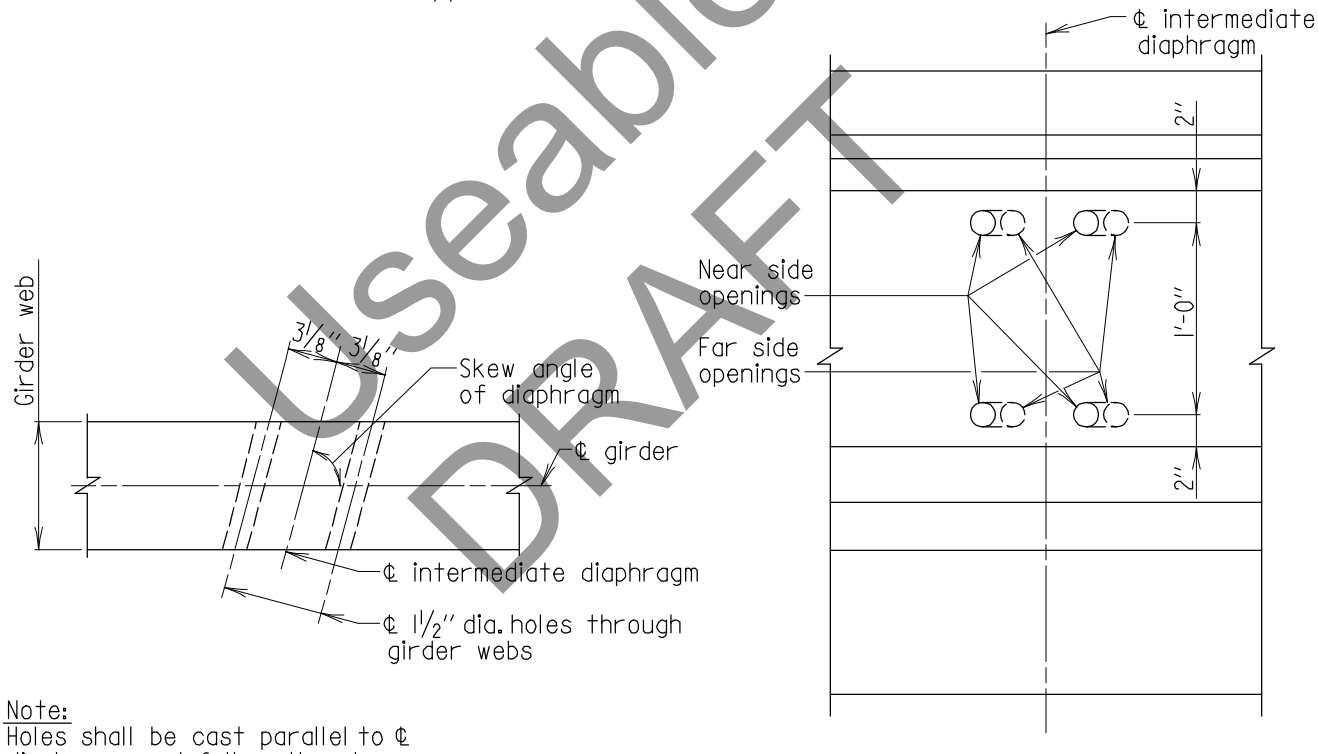

Note:
Holes shall be cast parallel to ℄ diaphragm and follow the slope of the bottom of the diaphragm.

PLAN

ELEVATION

DIAPHRAGM HOLE DETAIL

Scale: 1" = 1'-0"

Useable DRAFT

* USEABLE DRAFT *

APPROVAL	
_____ DIRECTOR OFFICE OF BRIDGE DEVEL. DATE: 09/01/15	
REVISIONS	
SHA	FHWA
FHWA APPROVAL	
DATE:	

STATE OF MARYLAND
DEPARTMENT OF TRANSPORTATION
STATE HIGHWAY ADMINISTRATION
OFFICE OF BRIDGE DEVELOPMENT

INTERMEDIATE DIAPHRAGM FOR
37" AND 39" PCEF BULB TEE GIRDERS

NO. SUP-CG(DIA)-102 SHEET 3 OF 3

SUPERSTRUCTURE CONCRETE GIRDER

Notes:
1. For Section A-A see sheet 2 of 3.
2. Normal concrete girder, slab and parapet reinforcing not shown.
3. All reinforcing steel, threaded bars and threaded inserts shall be epoxy coated.

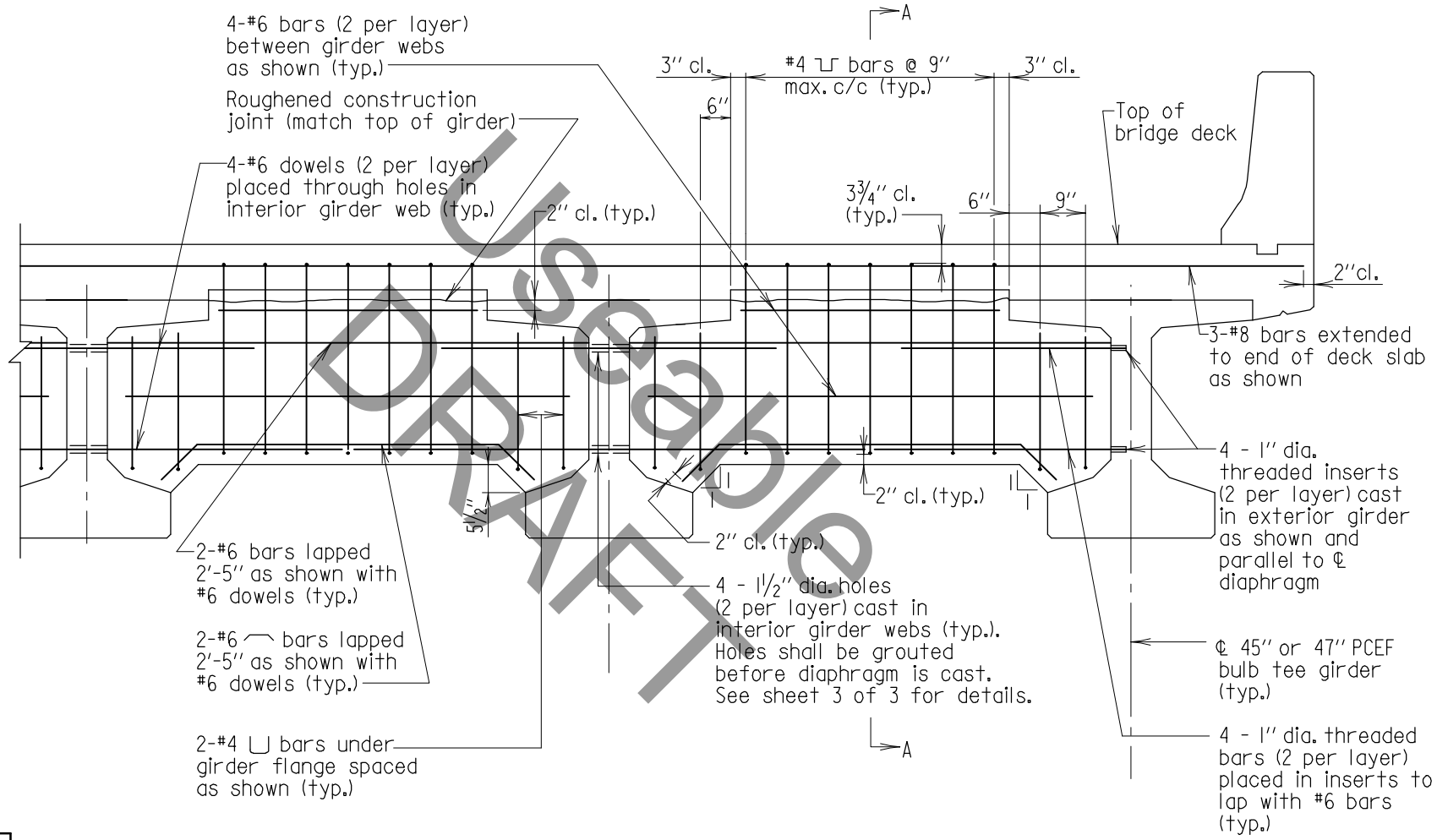

INTERMEDIATE DIAPHRAGM - ELEVATION
Scale: ⅜" = 1'-0"

Usable DRAFT

FHWA APPROVAL
DATE:

APPROVAL
OFFICE OF BRIDGE DEVEL. DIRECTOR
DATE: 09/01/15

REVISIONS
SHA
FHWA

STATE OF MARYLAND
DEPARTMENT OF TRANSPORTATION
STATE HIGHWAY ADMINISTRATION
OFFICE OF BRIDGE DEVELOPMENT

INTERMEDIATE DIAPHRAGM FOR
45" AND 47" PCEF BULB TEE GIRDERS

NO. SUP-CG(DIA)-103

SHEET 1 OF 3

* USEABLE DRAFT *

SUPERSTRUCTURE CONCRETE GIRDER

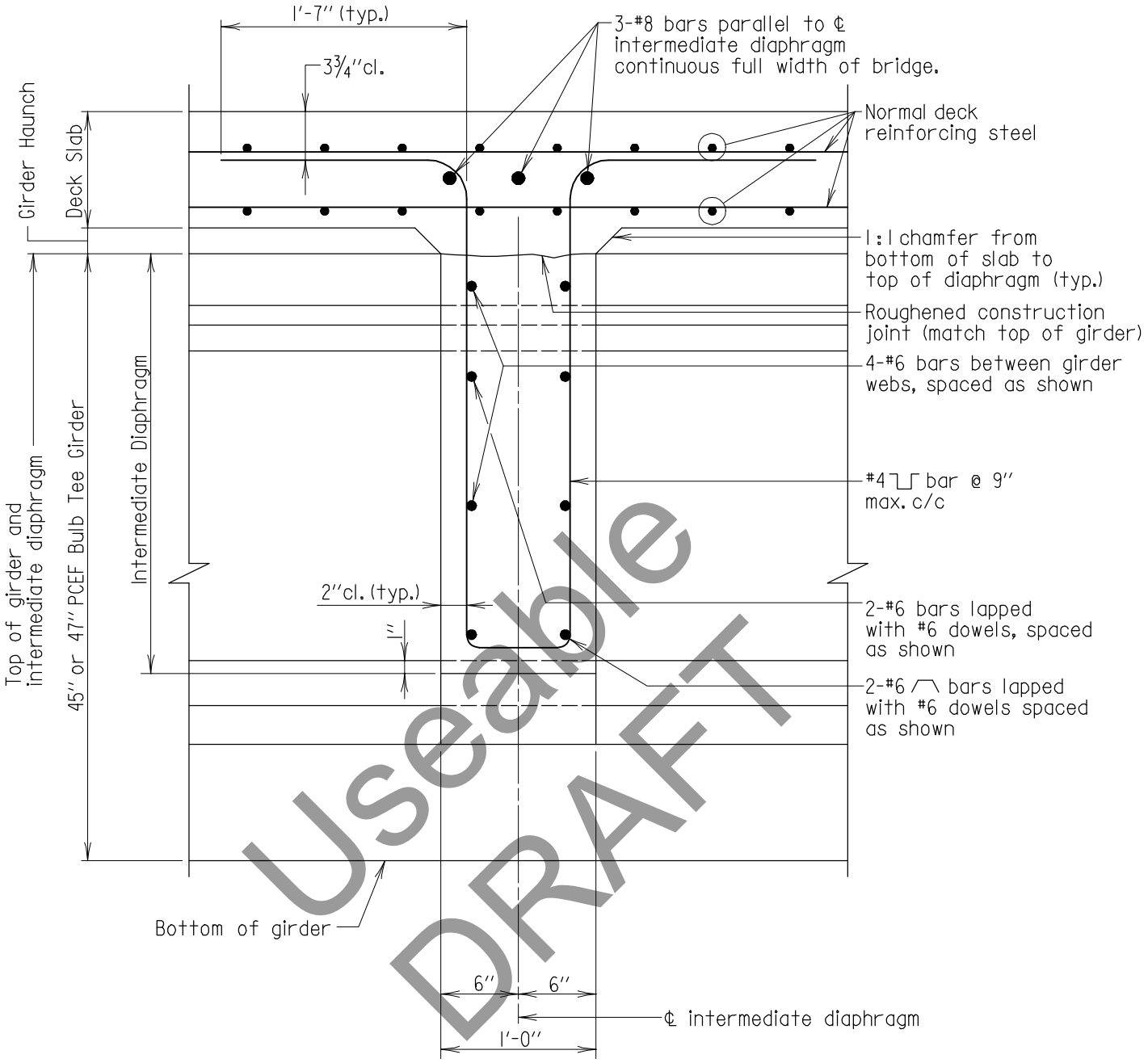

Useable DRAFT

SECTION A-A
Scale: 1" = 1'-0"

Notes:
1. All reinforcing steel and threaded bars shall be epoxy coated.
2. All reinforcing steel in girders shall be spaced to miss holes and threaded inserts in web.
3. Intermediate diaphragms shall be in place at least 40 hours prior to placement of deck.

* USEABLE DRAFT *

APPROVAL	
_____ DIRECTOR OFFICE OF BRIDGE DEVEL.	
DATE: 09/01/15	
REVISIONS	
SHA	FHWA

STATE OF MARYLAND
DEPARTMENT OF TRANSPORTATION
STATE HIGHWAY ADMINISTRATION
OFFICE OF BRIDGE DEVELOPMENT

INTERMEDIATE DIAPHRAGM FOR
45" AND 47" PCEF BULB TEE GIRDERS

FHWA APPROVAL
DATE:

NO. SUP-CG(DIA)-103 SHEET 2 OF 3

SUPERSTRUCTURE CONCRETE GIRDER

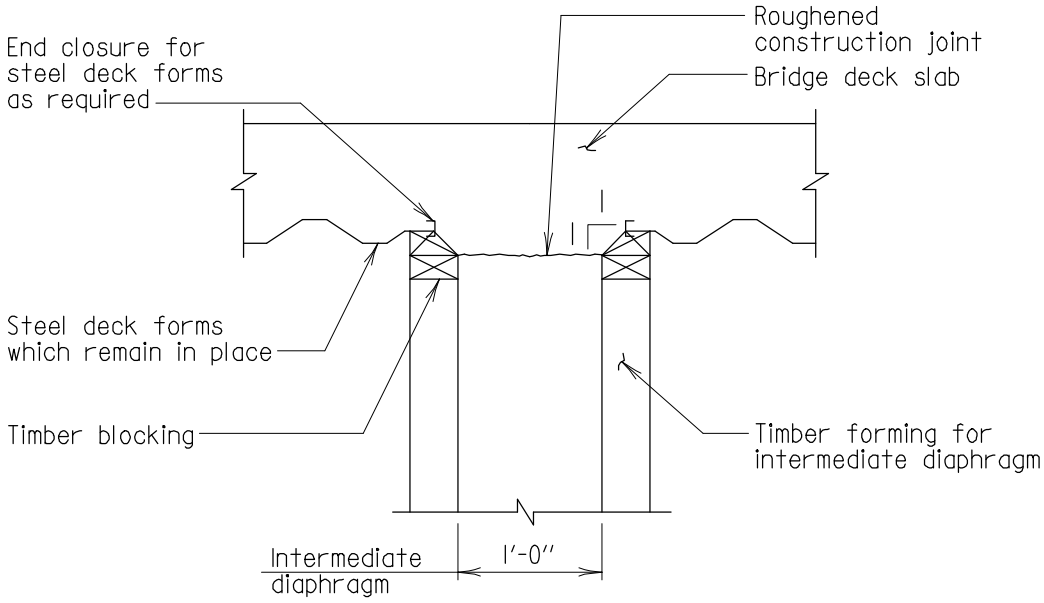

DECK FORMING DETAIL AT INTERMEDIATE DIAPHRAGM

Scale: 3/4" = 1'-0"

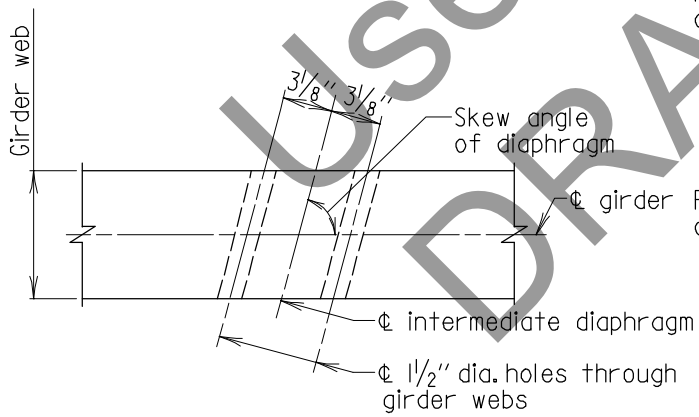

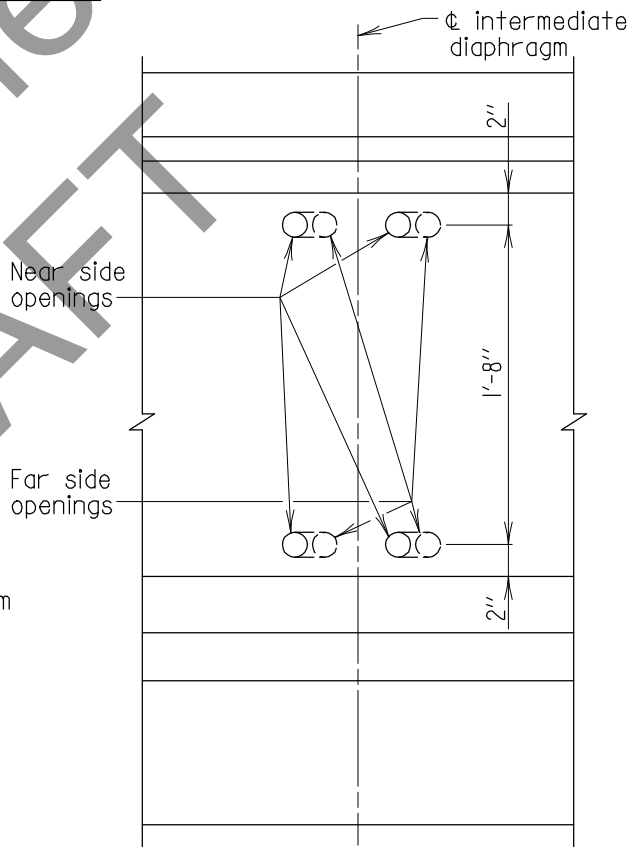

Note:
Holes shall be cast parallel to ℄ diaphragm and follow the slope of the bottom of the diaphragm.

PLAN

ELEVATION

DIAPHRAGM HOLE DETAIL

Scale: 1" = 1'-0"

Useable DRAFT

* USEABLE DRAFT *

APPROVAL	
_____ DIRECTOR OFFICE OF BRIDGE DEVEL. DATE: 09/01/15	
REVISIONS	
SHA	FHWA
FHWA APPROVAL	
DATE:	

STATE OF MARYLAND
DEPARTMENT OF TRANSPORTATION
STATE HIGHWAY ADMINISTRATION
OFFICE OF BRIDGE DEVELOPMENT

INTERMEDIATE DIAPHRAGM FOR 45" AND 47" PCEF BULB TEE GIRDERS

NO. SUP-CG(DIA)-103 SHEET 3 OF 3

SUPERSTRUCTURE CONCRETE GIRDER

Notes:
1. For Section A-A see sheet 2 of 3.
2. Normal concrete girder, slab and parapet reinforcing not shown.
3. All reinforcing steel, threaded bars and threaded inserts shall be epoxy coated.

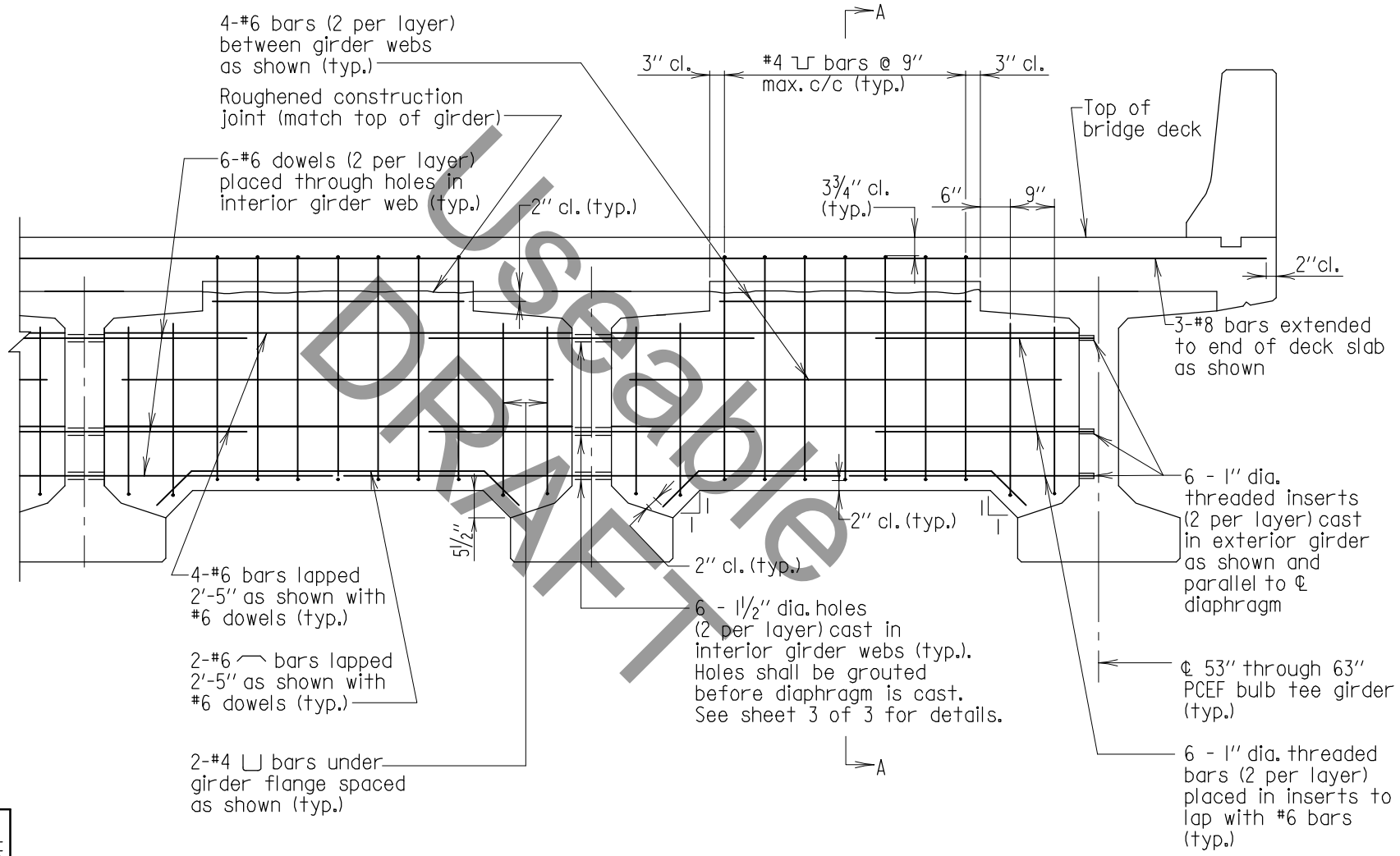

INTERMEDIATE DIAPHRAGM - ELEVATION
Scale: ⅜" = 1'-0"

Useable DRAFT

FHWA APPROVAL
DATE:

APPROVAL
OFFICE OF BRIDGE DEVEL. DIRECTOR
DATE: 09/01/15

REVISIONS
SHA
FHWA

STATE OF MARYLAND
DEPARTMENT OF TRANSPORTATION
STATE HIGHWAY ADMINISTRATION
OFFICE OF BRIDGE DEVELOPMENT

INTERMEDIATE DIAPHRAGM FOR
53" THROUGH 63" PCEF BULB TEE GIRDERS

NO. SUP-CG(DIA)-104 SHEET 1 OF 3

* USEABLE DRAFT *

SUPERSTRUCTURE CONCRETE GIRDER

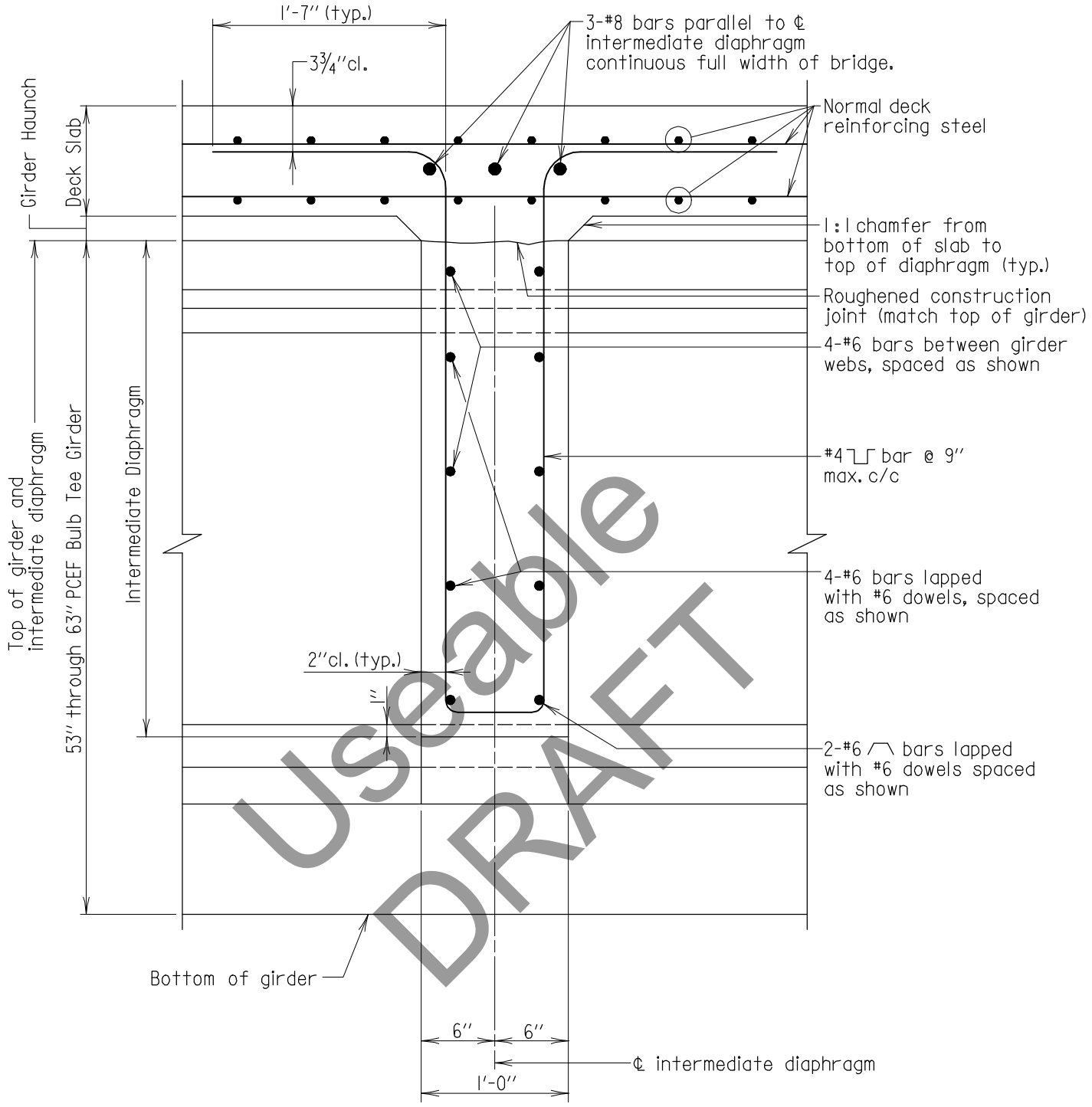

Useable DRAFT

SECTION A-A
Scale: 1" = 1'-0"

Notes:
1. All reinforcing steel and threaded bars shall be epoxy coated.
2. All reinforcing steel in girders shall be spaced to miss holes and threaded inserts in web.
3. Intermediate diaphragms shall be in place at least 40 hours prior to placement of deck.

* USEABLE DRAFT *

APPROVAL	
_____ DIRECTOR OFFICE OF BRIDGE DEVEL.	
DATE: 09/01/15	
REVISIONS	
SHA	FHWA

STATE OF MARYLAND
DEPARTMENT OF TRANSPORTATION
STATE HIGHWAY ADMINISTRATION
OFFICE OF BRIDGE DEVELOPMENT

INTERMEDIATE DIAPHRAGM FOR
53" THROUGH 63" PCEF BULB TEE GIRDERS

FHWA APPROVAL
DATE:

NO. SUP-CG(DIA)-104 SHEET 2 OF 3

SUPERSTRUCTURE CONCRETE GIRDER

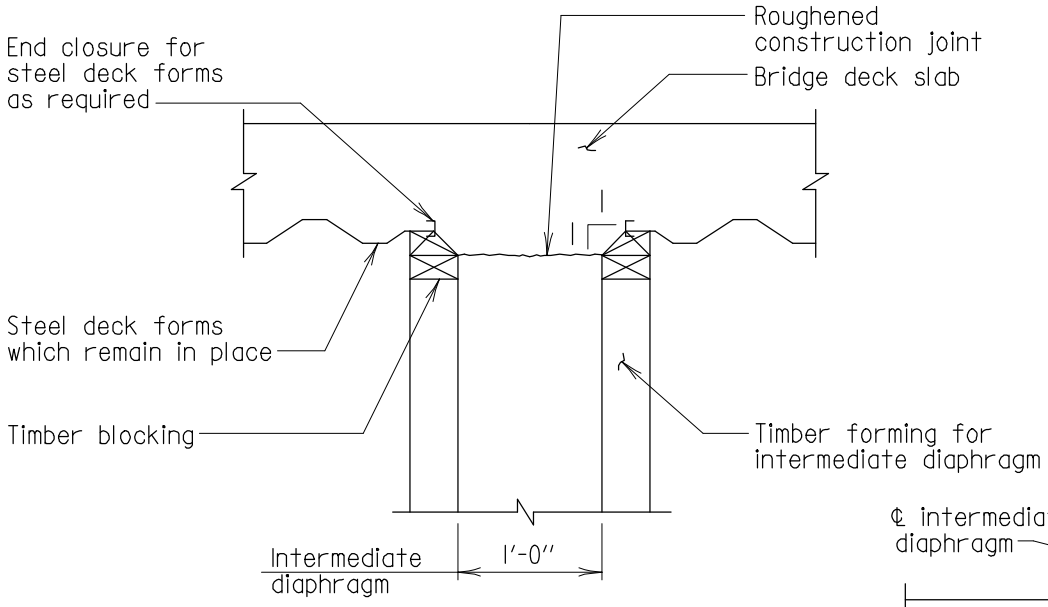

DECK FORMING DETAIL AT INTERMEDIATE DIAPHRAGM
Scale: 3/4" = 1'-0"

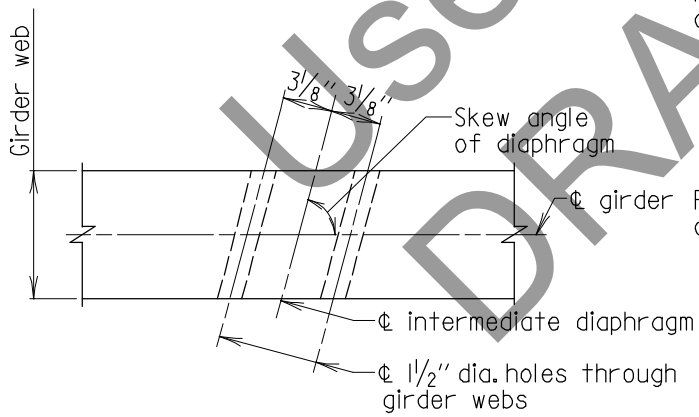

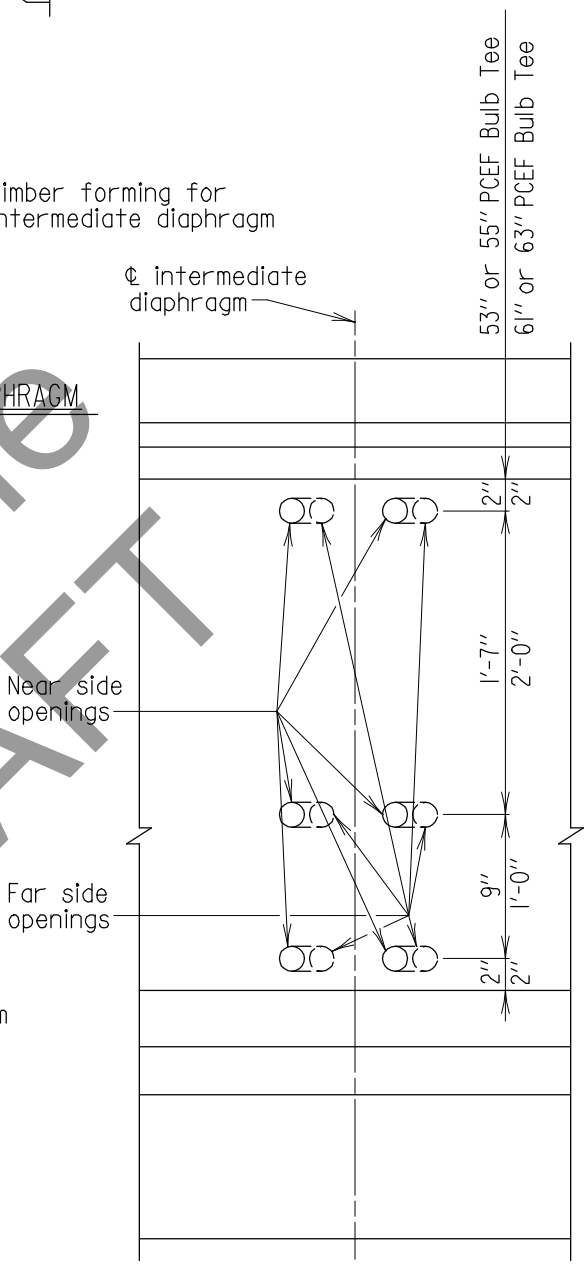

Note:
Holes shall be cast parallel to ℄ diaphragm and follow the slope of the bottom of the diaphragm.

PLAN

ELEVATION

DIAPHRAGM HOLE DETAIL
Scale: 1" = 1'-0"

Useable DRAFT

* USEABLE DRAFT *

APPROVAL	
_____ DIRECTOR OFFICE OF BRIDGE DEVEL. DATE: 09/01/15	
REVISIONS	
SHA	FHWA

FHWA APPROVAL
DATE:

STATE OF MARYLAND
DEPARTMENT OF TRANSPORTATION
STATE HIGHWAY ADMINISTRATION
OFFICE OF BRIDGE DEVELOPMENT

INTERMEDIATE DIAPHRAGM FOR
53" THROUGH 63" PCEF BULB TEE GIRDERS

NO. SUP-CG(DIA)-104 SHEET 3 OF 3

SUPERSTRUCTURE CONCRETE GIRDER

Notes:
1. For Section A-A see sheet 2 of 3.
2. Normal concrete girder, slab and parapet reinforcing not shown.
3. All reinforcing steel, threaded bars and threaded inserts shall be epoxy coated.

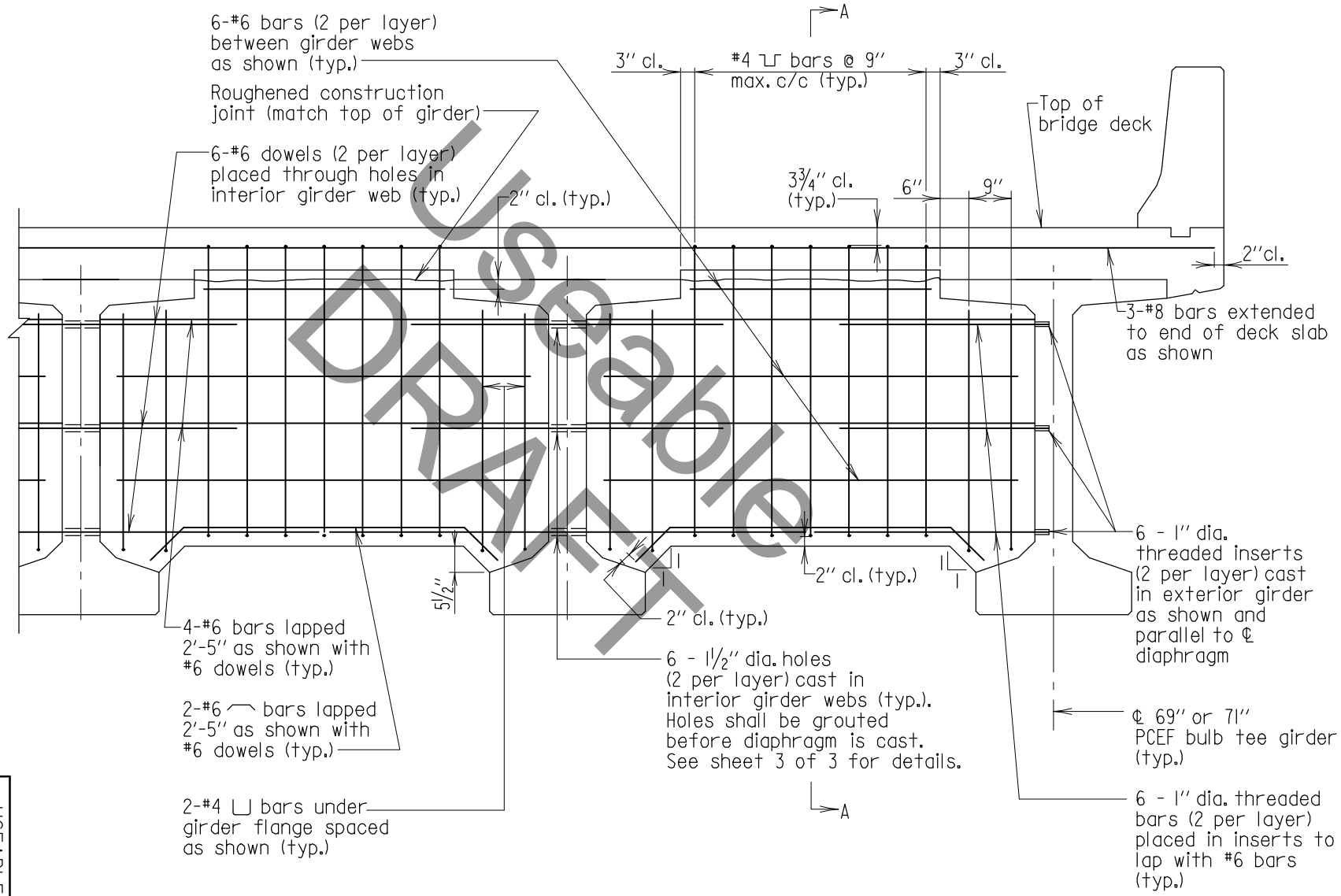

INTERMEDIATE DIAPHRAGM - ELEVATION
Scale: ⅜" = 1'-0"

Useable DRAFT

FHWA APPROVAL
DATE:

APPROVAL
OFFICE OF BRIDGE DEVEL. DIRECTOR
DATE: 09/01/15

REVISIONS
SHA
FHWA

STATE OF MARYLAND
DEPARTMENT OF TRANSPORTATION
STATE HIGHWAY ADMINISTRATION
OFFICE OF BRIDGE DEVELOPMENT

INTERMEDIATE DIAPHRAGM FOR
69" AND 71" PCEF BULB TEE GIRDERS

NO. SUP-CG(DIA)-105

SHEET 1 OF 3

* USEABLE DRAFT *

SUPERSTRUCTURE CONCRETE GIRDER

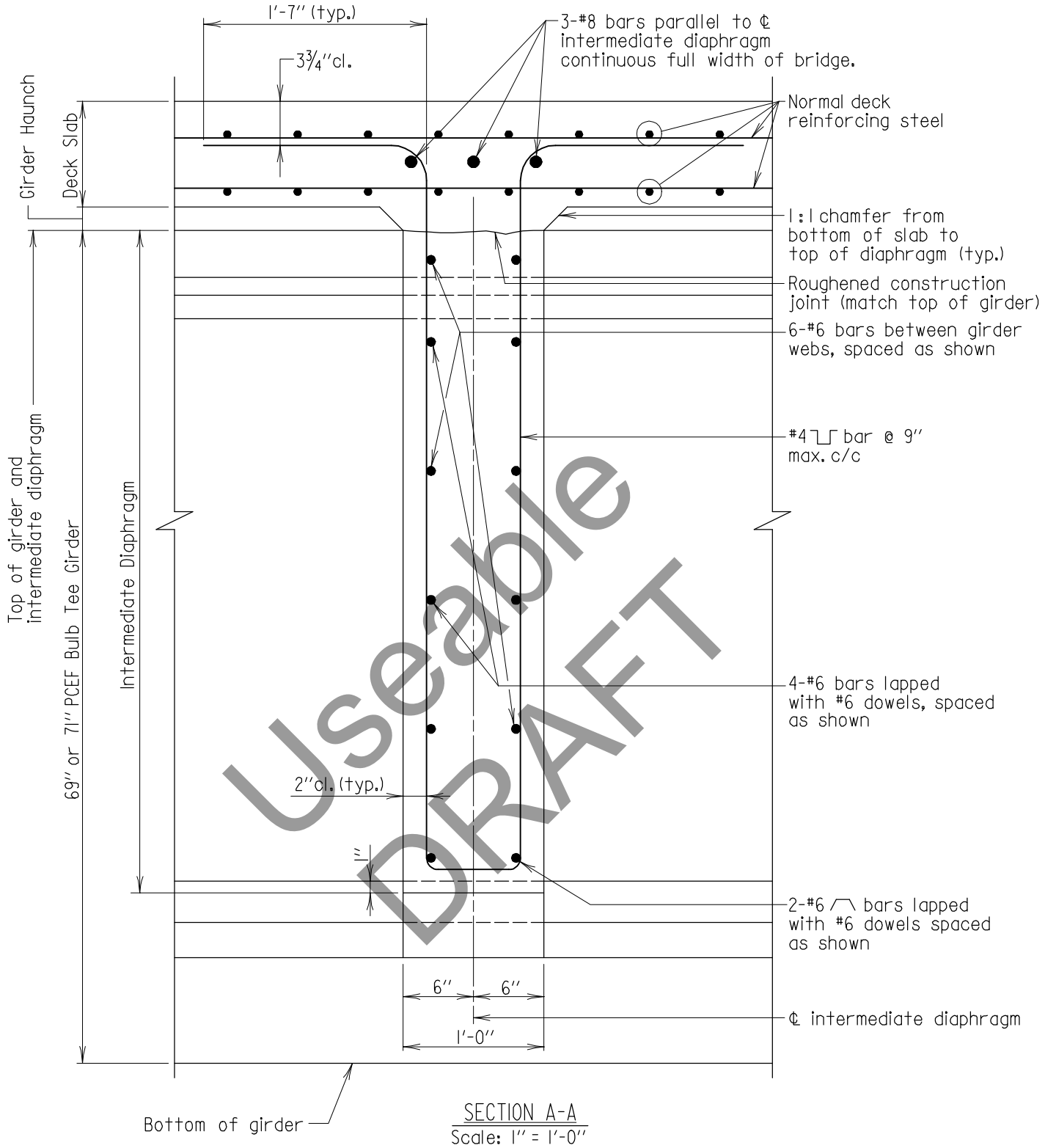

SECTION A-A
Scale: 1" = 1'-0"

Notes:
1. All reinforcing steel and threaded bars shall be epoxy coated.
2. All reinforcing steel in girders shall be spaced to miss holes and threaded inserts in web.
3. Intermediate diaphragms shall be in place at least 40 hours prior to placement of deck.

* USEABLE DRAFT *

APPROVAL	
_____ DIRECTOR OFFICE OF BRIDGE DEVEL.	
DATE: 09/01/15	
REVISIONS	
SHA	FHWA

FHWA APPROVAL
DATE:

STATE OF MARYLAND
DEPARTMENT OF TRANSPORTATION
STATE HIGHWAY ADMINISTRATION
OFFICE OF BRIDGE DEVELOPMENT

INTERMEDIATE DIAPHRAGM FOR
69" AND 71" PCEF BULB TEE GIRDERS

NO. SUP-CG(DIA)-105 SHEET 2 OF 3

SUPERSTRUCTURE CONCRETE GIRDER

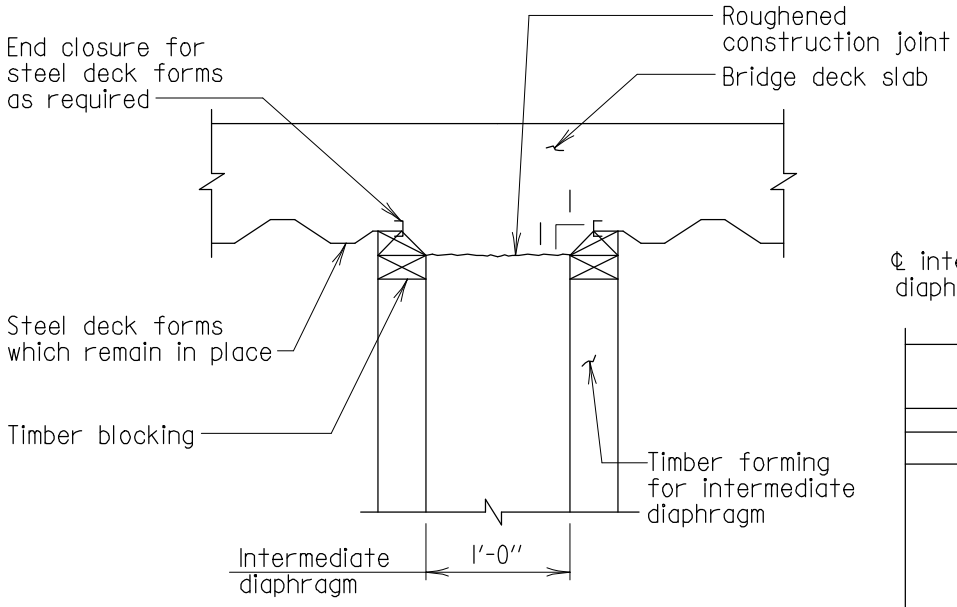

DECK FORMING DETAIL AT INTERMEDIATE DIAPHRAGM

Scale: 3/4" = 1'-0"

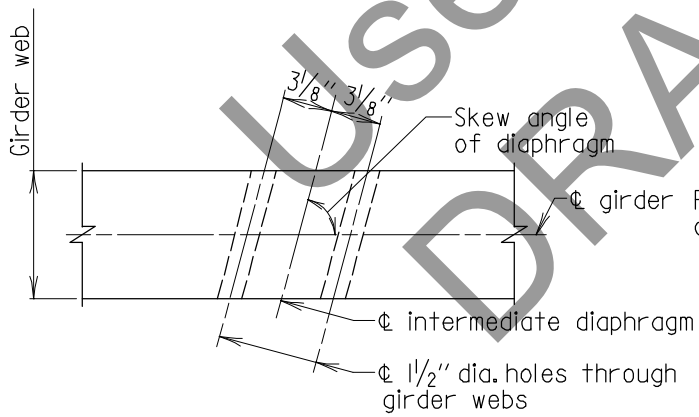

Note:
Holes shall be cast parallel to ℄ diaphragm and follow the slope of the bottom of the diaphragm.

PLAN

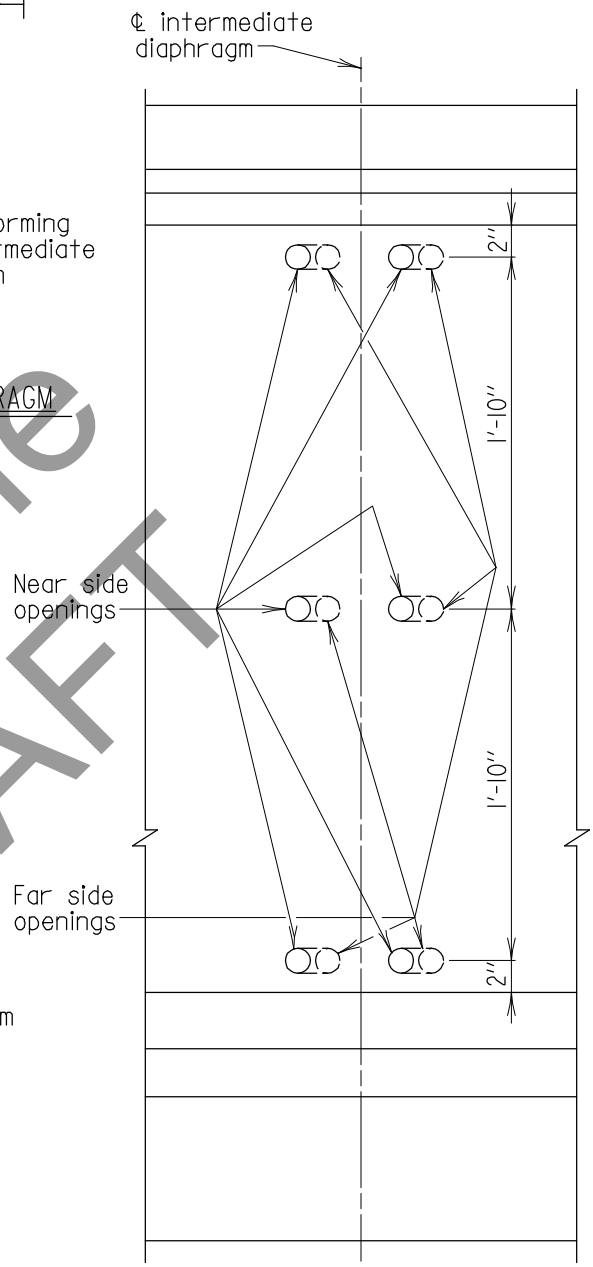

ELEVATION

DIAPHRAGM HOLE DETAIL

Scale: 1" = 1'-0"

Useable DRAFT

* USEABLE DRAFT *

APPROVAL	
_____ DIRECTOR OFFICE OF BRIDGE DEVEL. DATE: 09/01/15	
REVISIONS	
SHA	FHWA
FHWA APPROVAL	
DATE:	

STATE OF MARYLAND
DEPARTMENT OF TRANSPORTATION
STATE HIGHWAY ADMINISTRATION
OFFICE OF BRIDGE DEVELOPMENT

INTERMEDIATE DIAPHRAGM FOR
69" AND 71" PCEF BULB TEE GIRDERS

NO. SUP-CG(DIA)-105 SHEET 3 OF 3

SUPERSTRUCTURE CONCRETE GIRDER

Notes:
1. For Section A-A see sheet 2 of 3.
2. Normal concrete girder, slab and parapet reinforcing not shown.
3. All reinforcing steel, threaded bars and threaded inserts shall be epoxy coated.

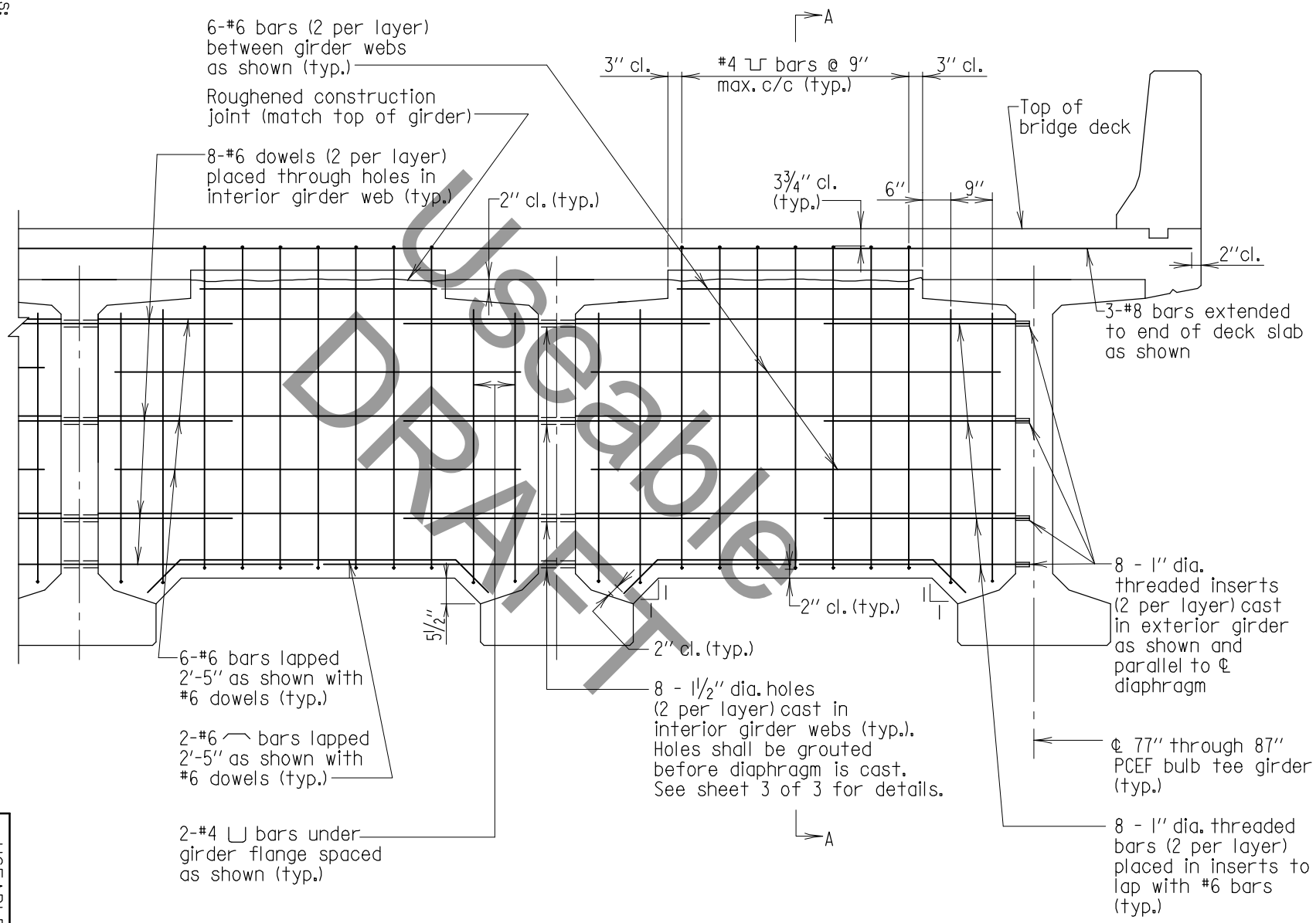

INTERMEDIATE DIAPHRAGM - ELEVATION
Scale: ⅜" = 1'-0"

Useable DRAFT

FHWA APPROVAL
DATE:

APPROVAL
OFFICE OF BRIDGE DEVEL. DIRECTOR
DATE: 09/01/15

REVISIONS
SHA
FHWA

STATE OF MARYLAND
DEPARTMENT OF TRANSPORTATION
STATE HIGHWAY ADMINISTRATION
OFFICE OF BRIDGE DEVELOPMENT

INTERMEDIATE DIAPHRAGM FOR
77" THROUGH 87" PCEF BULB TEE GIRDERS

NO. SUP-CG(DIA)-106

SHEET 1 OF 3

* USEABLE DRAFT *

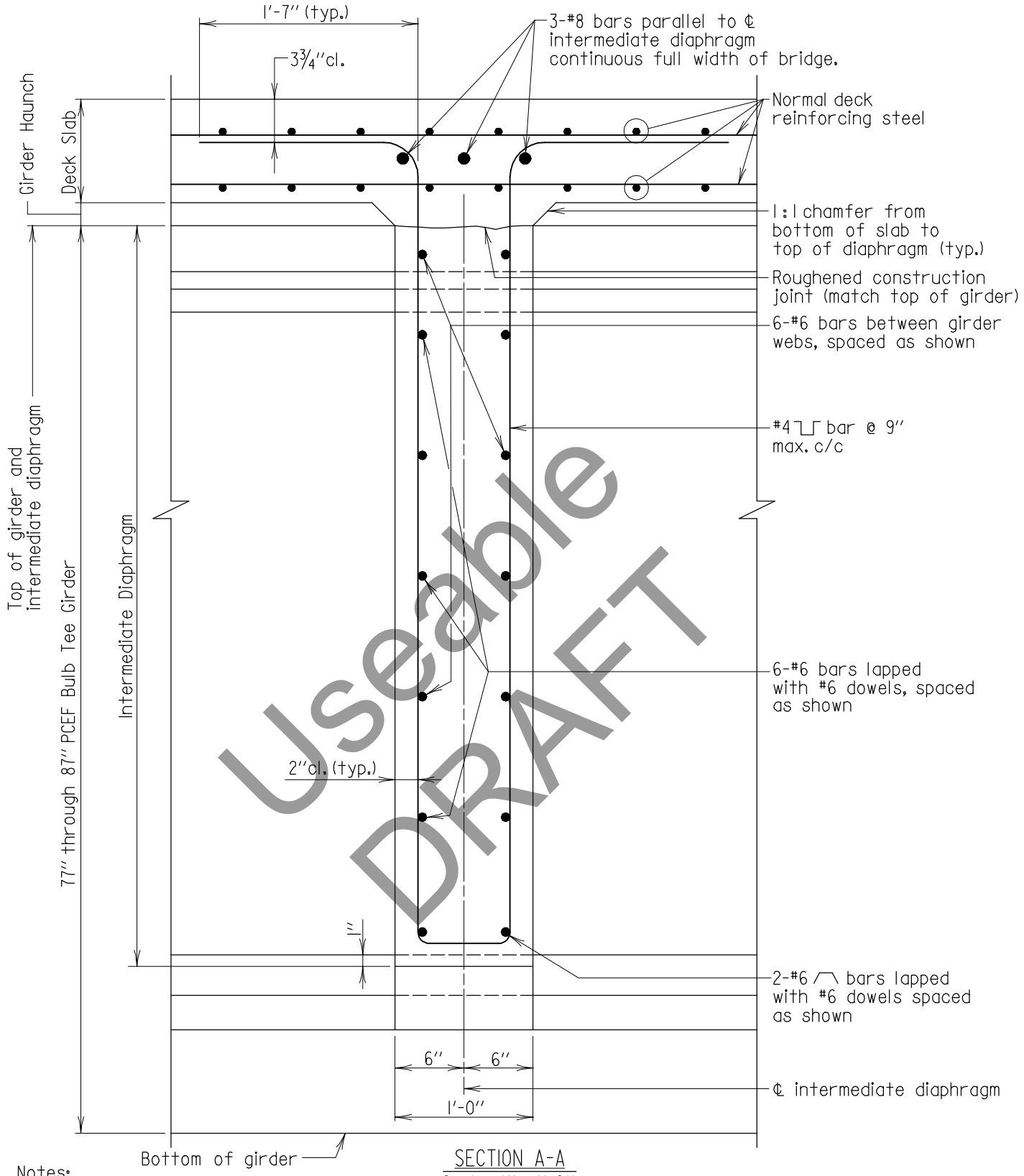

SECTION A-A
Scale: 1" = 1'-0"

Useable DRAFT

Notes:
1. All reinforcing steel and threaded bars shall be epoxy coated.
2. All reinforcing steel in girders shall be spaced to miss holes and threaded inserts in web.
3. Intermediate diaphragms shall be in place at least 40 hours prior to placement of deck.

* USEABLE DRAFT *

APPROVAL	
_____ DIRECTOR OFFICE OF BRIDGE DEVEL.	
DATE: 09/01/15	
REVISIONS	
SHA	FHWA

FHWA APPROVAL
DATE:

STATE OF MARYLAND
DEPARTMENT OF TRANSPORTATION
STATE HIGHWAY ADMINISTRATION
OFFICE OF BRIDGE DEVELOPMENT

INTERMEDIATE DIAPHRAGM FOR
77" THROUGH 87" PCEF BULB TEE GIRDERS

NO. SUP-CG(DIA)-106 SHEET 2 OF 3

SUPERSTRUCTURE CONCRETE GIRDER

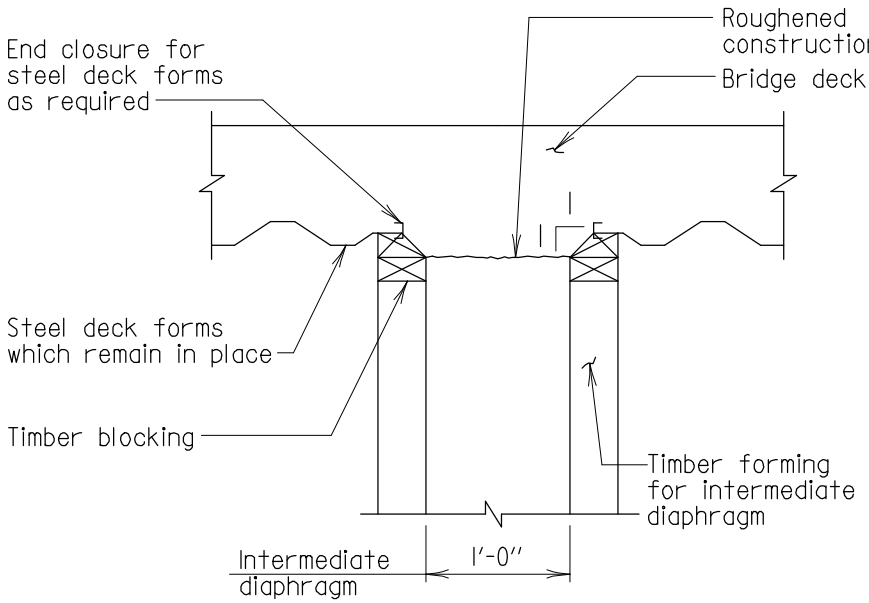

DECK FORMING DETAIL AT INTERMEDIATE DIAPHRAGM
Scale: 3/4" = 1'-0"

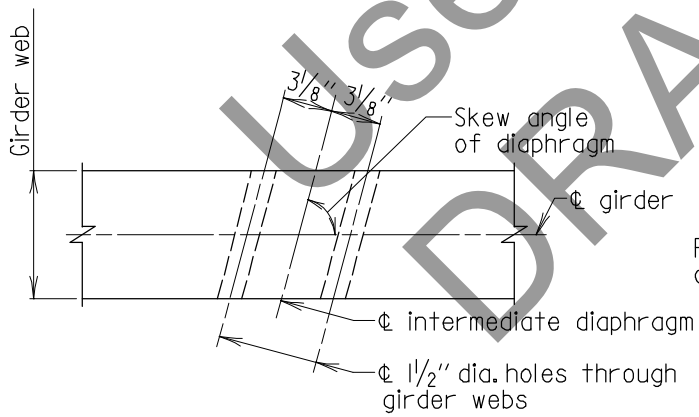

Note:
Holes shall be cast parallel to ℄ diaphragm and follow the slope of the bottom of the diaphragm.

PLAN

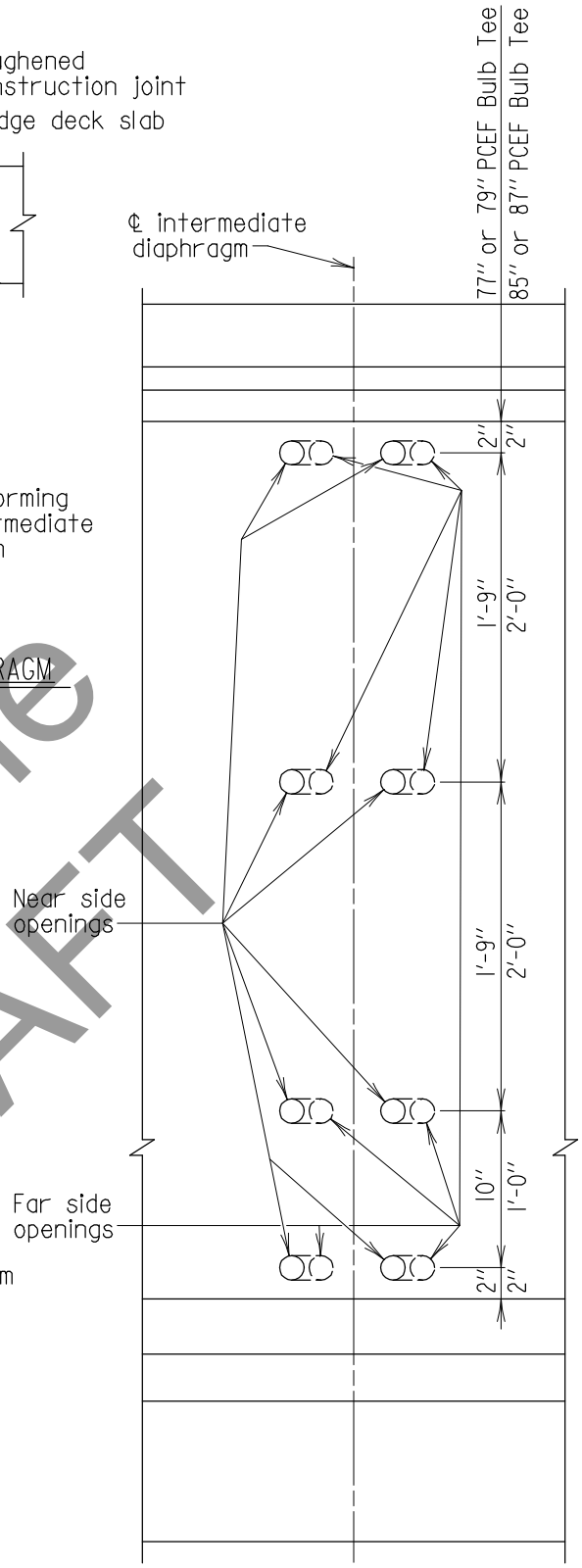

ELEVATION

DIAPHRAGM HOLE DETAIL
Scale: 1" = 1'-0"

Useable DRAFT

* USEABLE DRAFT *

APPROVAL	
_____ DIRECTOR OFFICE OF BRIDGE DEVEL. DATE: 09/01/15	
REVISIONS	
SHA	FHWA
FHWA APPROVAL	
DATE:	

STATE OF MARYLAND
DEPARTMENT OF TRANSPORTATION
STATE HIGHWAY ADMINISTRATION
OFFICE OF BRIDGE DEVELOPMENT

INTERMEDIATE DIAPHRAGM FOR
77" THROUGH 87" PCEF BULB TEE GIRDERS

NO. SUP-CG(DIA)-106 SHEET 3 OF 3

SUPERSTRUCTURE CONCRETE GIRDER

Notes:
1. For Section A-A see sheet 2 of 3.
2. Normal concrete girder, slab and parapet reinforcing not shown.
3. All reinforcing steel, threaded bars and threaded inserts shall be epoxy coated.

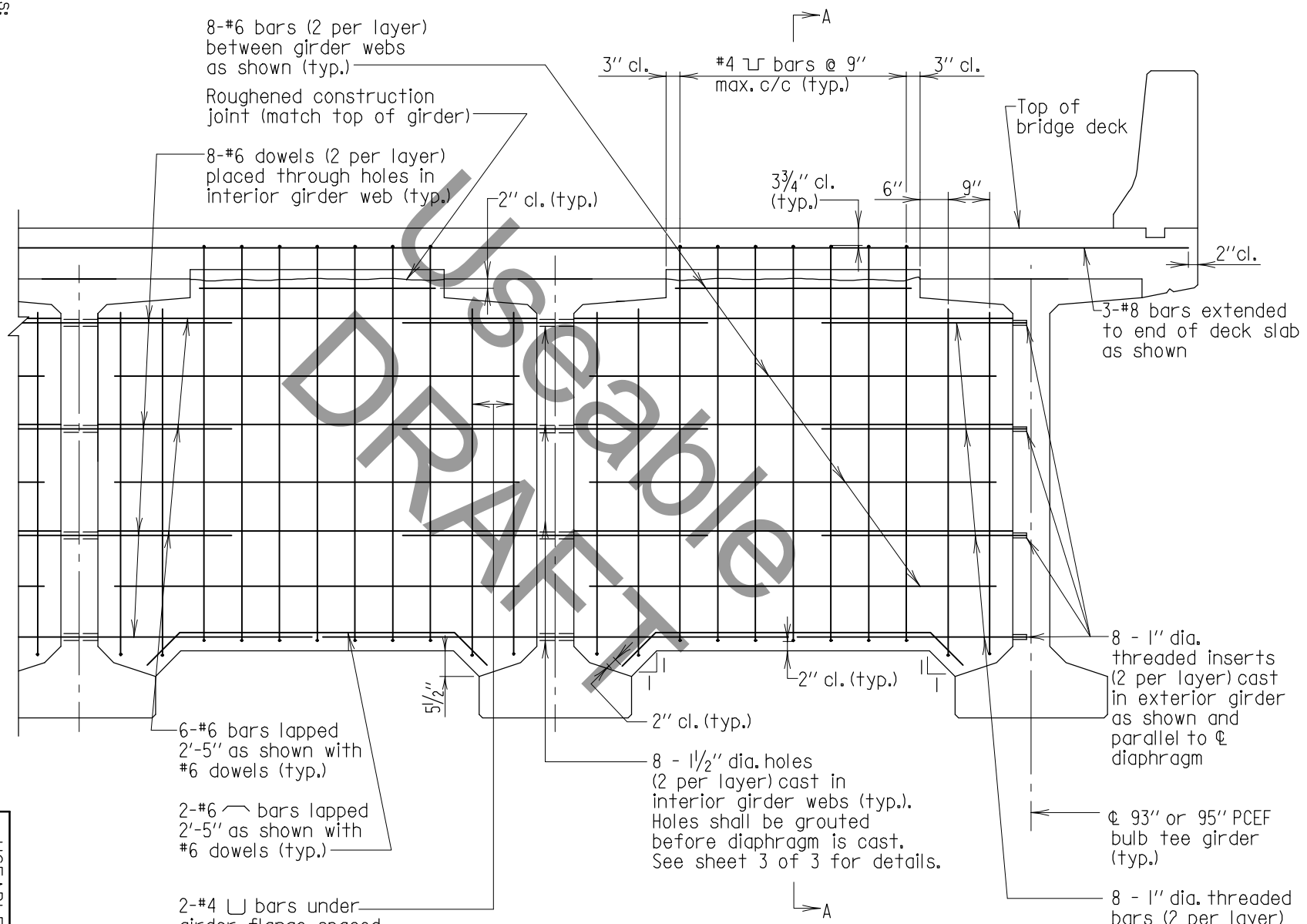

INTERMEDIATE DIAPHRAGM - ELEVATION
Scale: ⅜" = 1'-0"

Usable DRAFT

FHWA APPROVAL
DATE:

APPROVAL
OFFICE OF BRIDGE DEVEL. DIRECTOR
DATE: 09/01/15

REVISIONS
SHA
FHWA

STATE OF MARYLAND
DEPARTMENT OF TRANSPORTATION
STATE HIGHWAY ADMINISTRATION
OFFICE OF BRIDGE DEVELOPMENT

INTERMEDIATE DIAPHRAGM FOR
93" AND 95" PCEF BULB TEE GIRDERS

NO. SUP-CG(DIA)-107

SHEET 1 OF 3

* USEABLE DRAFT *

SUPERSTRUCTURE CONCRETE GIRDER

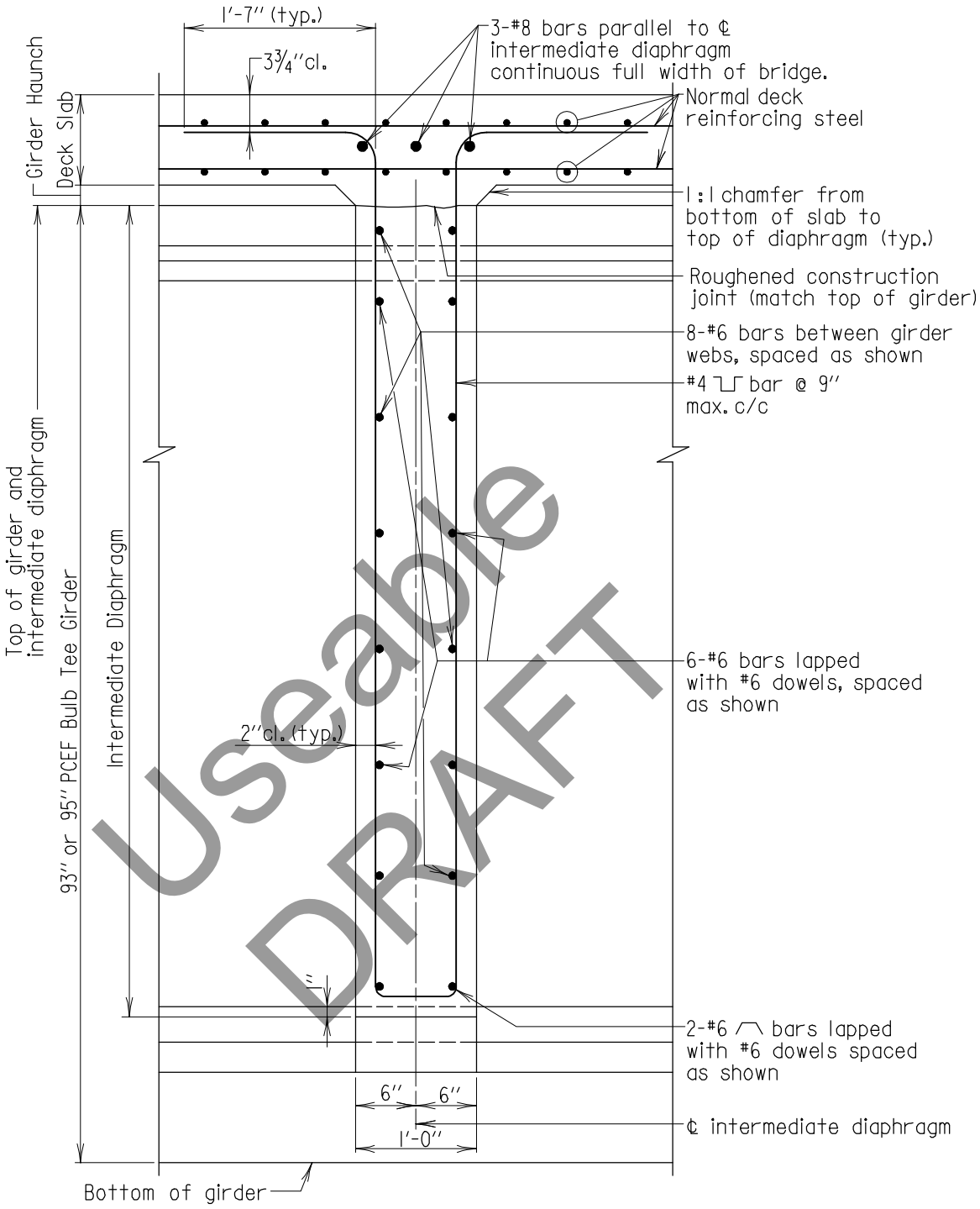

Useable DRAFT

SECTION A-A
Scale: ¾" = 1'-0"

Notes:
1. All reinforcing steel and threaded bars shall be epoxy coated.
2. All reinforcing steel in girders shall be spaced to miss holes and threaded inserts in web.
3. Intermediate diaphragms shall be in place at least 40 hours prior to placement of deck.

* USEABLE DRAFT *

APPROVAL	
_____ DIRECTOR OFFICE OF BRIDGE DEVEL.	
DATE: 09/01/15	
REVISIONS	
SHA	FHWA
FHWA APPROVAL	
DATE:	

STATE OF MARYLAND
DEPARTMENT OF TRANSPORTATION
STATE HIGHWAY ADMINISTRATION
OFFICE OF BRIDGE DEVELOPMENT

INTERMEDIATE DIAPHRAGM FOR
93" AND 95" PCEF BULB TEE GIRDERS

NO. SUP-CG(DIA)-107 SHEET 2 OF 3

SUPERSTRUCTURE CONCRETE GIRDER

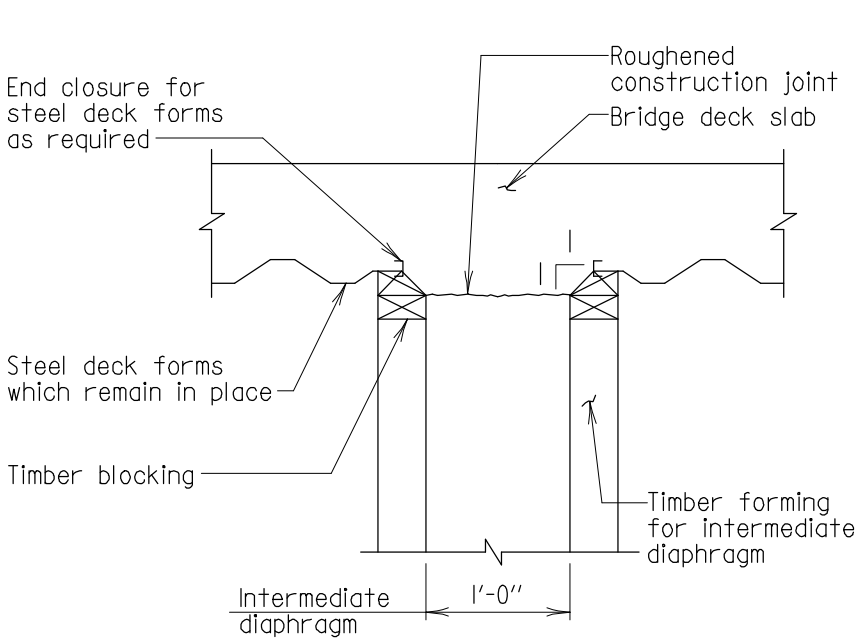

DECK FORMING DETAIL AT INTERMEDIATE DIAPHRAGM

Scale: 3/4" = 1'-0"

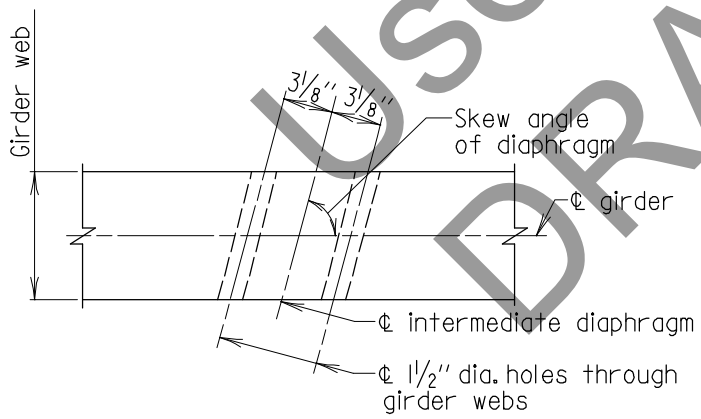

Note:
Holes shall be cast parallel to ℄ diaphragm and follow the slope of the bottom of the diaphragm.

PLAN

DIAPHRAGM HOLE DETAIL

Scale: 1" = 1'-0"

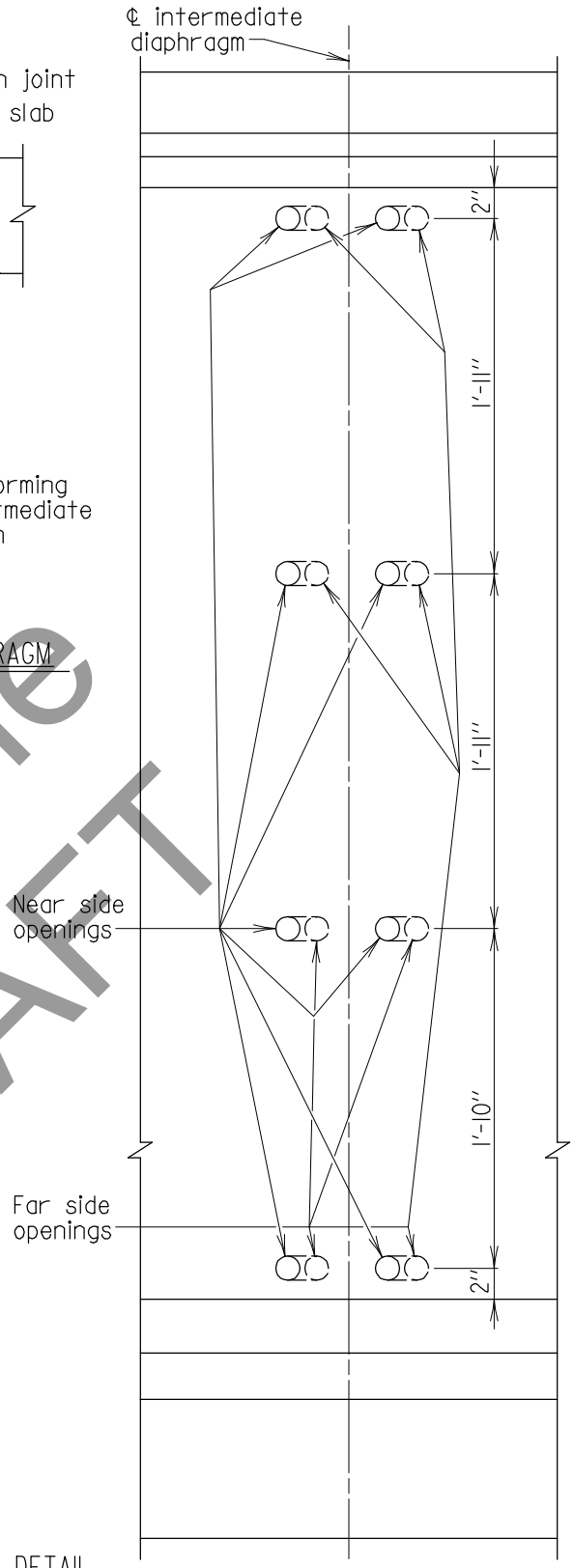

ELEVATION

Useable DRAFT

* USEABLE DRAFT *

APPROVAL	
_____ DIRECTOR OFFICE OF BRIDGE DEVEL. DATE: 09/01/15	
REVISIONS	
SHA	FHWA

FHWA APPROVAL
DATE:

STATE OF MARYLAND
DEPARTMENT OF TRANSPORTATION
STATE HIGHWAY ADMINISTRATION
OFFICE OF BRIDGE DEVELOPMENT

INTERMEDIATE DIAPHRAGM FOR
93" AND 95" PCEF BULB TEE GIRDERS

NO. SUP-CG(DIA)-107 SHEET 3 OF 3

SUPERSTRUCTURE CONCRETE GIRDER

SUPERSTRUCTURE

PRECAST CONCRETE SLABS

(SUP-SLAB)

SUPERSTRUCUTRE

CONCRETE SLABS

GENERAL

(SUP-SLAB(GEN))

GENERAL NOTES

Specifications: Latest Specifications and Special Provisions for materials and construction. Latest AASHTO Standard Specifications for Highway Bridges for design.

Design Assumptions: The superimposed dead load is 1020 lb/ft for a 4 foot slab and 950 lb/ft for a 3 foot slab unless specified otherwise on the Plans.

No composite action between the prestressed concrete slab panels and the concrete overlay has been considered.

Prestressed Concrete: Load and resistance factor method f'c = 7,000 psi. The minimum compressive strength at transfer of prestress shall be f'c = 5,950 psi.

Prestressing Steel: Prestressing steel shall consist of ½" diameter 7-wire low relaxation strands conforming to the requirements of M 203 Grade 270. Each ½" strand shall be pretensioned to 31,000 lb. (0.75 fpu). Have an ultimate strength of 41,300 lb and a yield strength of 37,200 lb (0.90 fpu).

Prestressed Concrete: All concrete for prestressed concrete slabs shall be self consolidating concrete with a 28 day compressive strength of f'c = 8,000 psi.

Construction: Strands shall be pretensioned to the values specified on the Plans.

Camber readings and report shall conform to 440.03.16.

Tolerances shall be as specified in 440.03.17.

The Contractor shall show the type and location of the lifting inserts. The Contractor shall ensure the lifting devices have the safe working capacity to lift the slab panels into position during erection, without overstressing the panels.

The Contractor shall assemble the slab panels for the entire bridge width at the casting plant to ensure that there is no misalignment prior to shipping slab units to the site. Any misalignment of the transverse rod holes will be cause for rejection of the prestressed concrete slab panel. Drilling or coring of the slab panels (either initially) or to rectify a problem is prohibited.

The Contractor will be allowed to place equipment on the slab unit prior to placing the concrete overlay provided that all slab units are in place, the tie rods tensioned to the final tensioning force, the shear key grout has met the curing requirements, and it does not violate Section TC-6.14.

Measurement and Payment: Measurement and Payment shall be as specified in 440.04.

* USEABLE DRAFT*

APPROVAL	
_____ DIRECTOR OFFICE OF STRUCTURES	
DATE: 09/01/15	
REVISIONS	
SHA	FHWA
FHWA APPROVAL	
DATE:	

STATE OF MARYLAND
DEPARTMENT OF TRANSPORTATION
STATE HIGHWAY ADMINISTRATION
OFFICE OF STRUCTURES

PRESTRESSED CONCRETE SLAB PANEL
GENERAL NOTES

NO. SUP-SLAB-101 SHEET 1 OF 1

SUPERSTRUCTURE SLABS

CONCRETE SLAB PANEL ERECTION
SEQUENCE OF OPERATIONS

The Contractor shall follow the following sequence of operations and Section 440.03.20 for the erection of slab panel units:

1. Immediately prior to erecting slab panels, clean the abrasive blasted shear key surfaces with compressed air, stiff bristle fiber brushes, or vacuuming.

2. Pull the slab panels together and field tighten in the transverse direction to the initial tensioning force as specified in Std. No. SUP-SLAB-401. Tension lateral tie rod(s) near mid span first and then progress towards the ends of the beam.

3. Isolate lateral tie rods from shear key grout by placing expandable spray foam sealant at all tie rod locations, following the manufacturer's guidlelines and as detailed in the Std. No. SUP-SLAB-501.

4. Seal the joint below the shear keys using an approved method.

5. Once the expandable spray foam sealant has met the manufacturer's curing requirements, procedures for placement of the shear key grout may begin.

6. Clean the shear key surface with compressed air and keep it moist until the grout is placed.

7. Grout the shear keys by overfilling the joints. Drive the grout or compactly tamp it into the keyways; do not vibrate. After 30 minutes, strike off the excess grout flush with the top of the panels. Follow the manufacturer's recommendations for grouting in cold or hot weather.

8. Start curing of the shear key grout immediately after the grout has been finished, but do not leave any portion of the grout uncovered for more than 45 minutes after placement.

9. Keep the surfaces wet, even in areas where there is no ready water supply.

10. Cure the shear key grout for three (3) days with burlap or cotton mats as specified in 420.03.09(B) or (D), respectively.

11. Allow a minimum of 48 hours between grouting of shear keys and final tensioning of lateral tie rods.

12. Tension lateral tie rods to final tensioning force as specified in Std. No. SUP-SLAB-401.

Useable DRAFT

* USEABLE DRAFT*

APPROVAL	
_____ DIRECTOR OFFICE OF STRUCTURES	
DATE: 09/01/15	
REVISIONS	
SHA	FHWA
FHWA APPROVAL	
DATE:	

STATE OF MARYLAND
DEPARTMENT OF TRANSPORTATION
STATE HIGHWAY ADMINISTRATION
OFFICE OF STRUCTURES

PRESTRESSED CONCRETE SLAB PANEL
SLAB ERECTION SEQUENCE OF OPERATIONS

NO. SUP-SLAB-102 SHEET 1 OF 1

SUPERSTRUCTURE SLABS

CONCRETE OVERLAY
SEQUENCE OF OPERATIONS

In preparation for the placement of the Mix No. 8 concrete overlay over the precast concrete slab units, the Contractor shall follow the following sequence of operations:

1. Concrete curbs and parapets may be placed once the lateral tie rods have been tensioned to the final tensioning force and the shear key grout has met the curing requirements.

2. Placement of the overlay may occur once the parapet and curbs have cured for 24 hours.

3. The overlay reinforcing mat may be assembled on or off the structure. However, the mats must be assembled in units that can be lifted on and off the structure prior to placing overlay. Reinforcing units shall be assembled with proper bar lap lengths to tie reinforcing units together. Temporary supports attached to the mats, such as diagonal rebars or similar support steel such as steel angles, may be required to prevent racking of the mat during lifting operations. No welding will be allowed.

4. To locate the reinforcing mat in the center of the deck overlay the Contractor shall place and tie the support chairs to the underside of the reinforcing mat.

5. The finishing screed shall be set-up and a dry run of the finishing operation made to verify that the reinforcing is properly located and the finished deck elevations shown on the plans can be achieved.

6. The reinforcing mat, including chairs, shall be lifted off of the bridge just prior to the placement of the overlay to permit the entire deck to be cleaned in accordance with Section 440.03.22.

7. Prior to beginning the placement of the overlay, the Contractor shall float the cement slurry across the bridge deck as described in the specifications and work it into the top of the slab units.

8. Keeping the slurry moist with a misting operation, the reinforcing mat shall be placed back on top of the precast slab units, segments tied together and resting on chairs, and the placement of the Mix No. 8 concrete overlay shall commence immediately. It is imperative that the overlay shall be placed while the slurry is in a non-set condition.

Useable DRAFT

* USEABLE DRAFT*

APPROVAL		
_____ DIRECTOR OFFICE OF STRUCTURES DATE: 09/01/15		
REVISIONS		
SHA	FHWA	
FHWA APPROVAL		
DATE:		

STATE OF MARYLAND
DEPARTMENT OF TRANSPORTATION
STATE HIGHWAY ADMINISTRATION
OFFICE OF STRUCTURES

PRESTRESSED CONCRETE SLAB PANEL
CONCRETE OVERLAY SEQUENCE OF OPERATIONS

NO. SUP-SLAB-103 SHEET 1 OF 1

SUPERSTRUCTURE SLABS

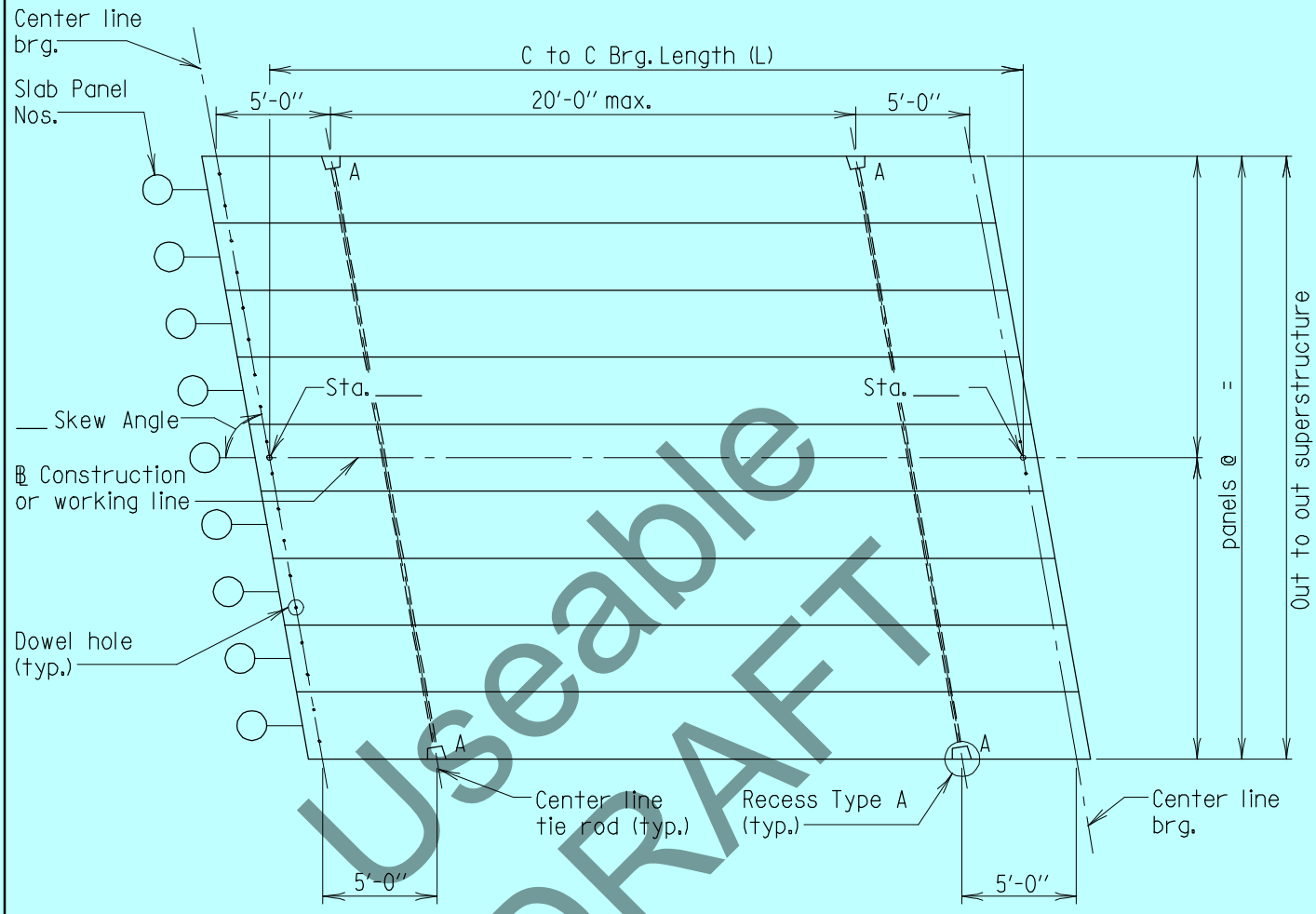

Useable DRAFT

PLAN
Scale: None

Notes:
1. For Type A recess detail see Std. No. SUP-SLAB-401.
2. Skew angle shall not be less then 60°.

* USEABLE DRAFT* | * FOR OFFICE USE ONLY *

APPROVAL	
_____ DIRECTOR OFFICE OF STRUCTURES DATE: 09/01/15	
REVISIONS	
SHA	FHWA

FHWA APPROVAL
DATE:

STATE OF MARYLAND
DEPARTMENT OF TRANSPORTATION
STATE HIGHWAY ADMINISTRATION
OFFICE OF STRUCTURES

PRECAST SLAB UNIT AND TIE ROD LAYOUT
SLABS 30' AND LESS

NO. SUP-SLAB-201 SHEET 1 OF 1

SUPERSTRUCTURE SLABS

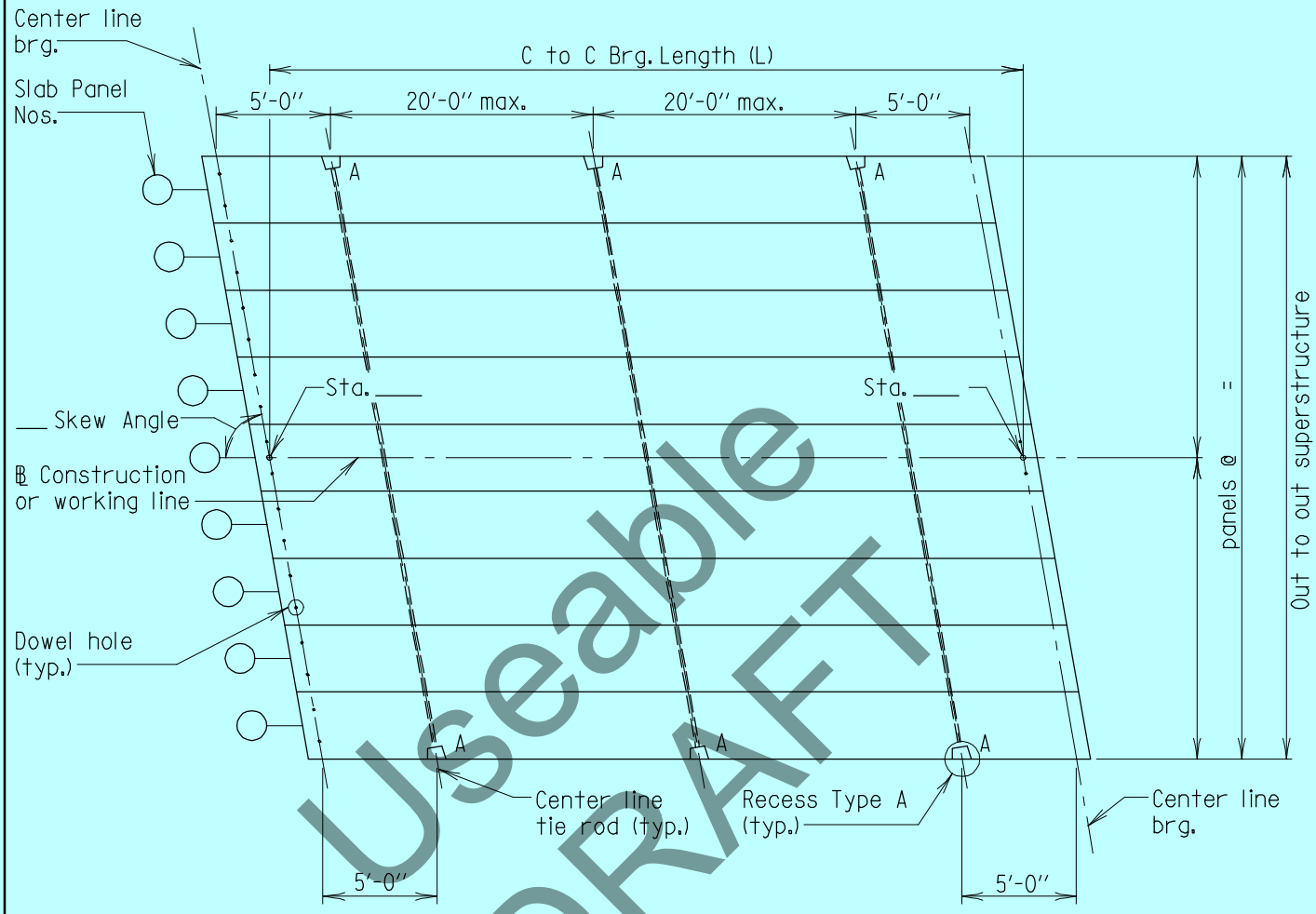

Useable DRAFT

PLAN
Scale: None

Notes:
1. For Type A recess detail see Std. No. SUP-SLAB-401.
2. Skew angle shall not be less then 60°.

* USEABLE DRAFT* | * FOR OFFICE USE ONLY *

APPROVAL	
_____ DIRECTOR OFFICE OF STRUCTURES DATE: 09/01/15	
REVISIONS	
SHA	FHWA

FHWA APPROVAL
DATE:

STATE OF MARYLAND
DEPARTMENT OF TRANSPORTATION
STATE HIGHWAY ADMINISTRATION
OFFICE OF STRUCTURES

PRECAST SLAB UNIT AND TIE ROD LAYOUT
SLABS GREATER THAN 30' UP TO 50'

NO. SUP-SLAB-202 SHEET 1 OF 1

SUPERSTRUCTURE SLABS

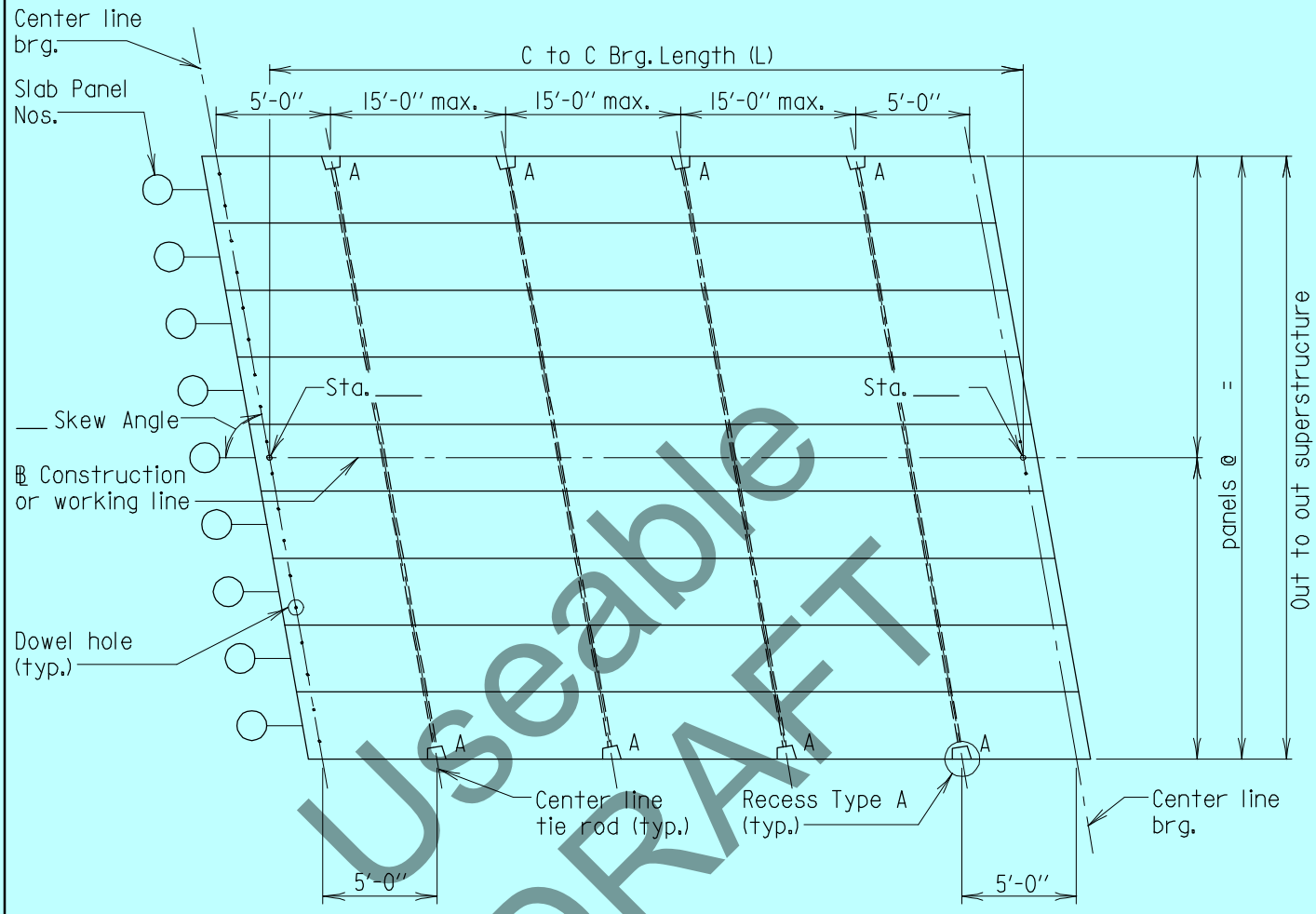

Useable DRAFT

PLAN
Scale: None

Notes:
1. For Type A recess detail see Std. No. SUP-SLAB-401.
2. Skew angle shall not be less then 60°.

* USEABLE DRAFT* | * FOR OFFICE USE ONLY *

APPROVAL
_____ DIRECTOR OFFICE OF STRUCTURES
DATE: 09/01/15

REVISIONS	
SHA	FHWA

FHWA APPROVAL
DATE:

STATE OF MARYLAND
DEPARTMENT OF TRANSPORTATION
STATE HIGHWAY ADMINISTRATION
OFFICE OF STRUCTURES

PRECAST SLAB UNIT AND TIE ROD LAYOUT
SLABS GREATER THAN 50'

NO. SUP-SLAB-203 SHEET 1 OF 1

SUPERSTRUCTURE SLABS

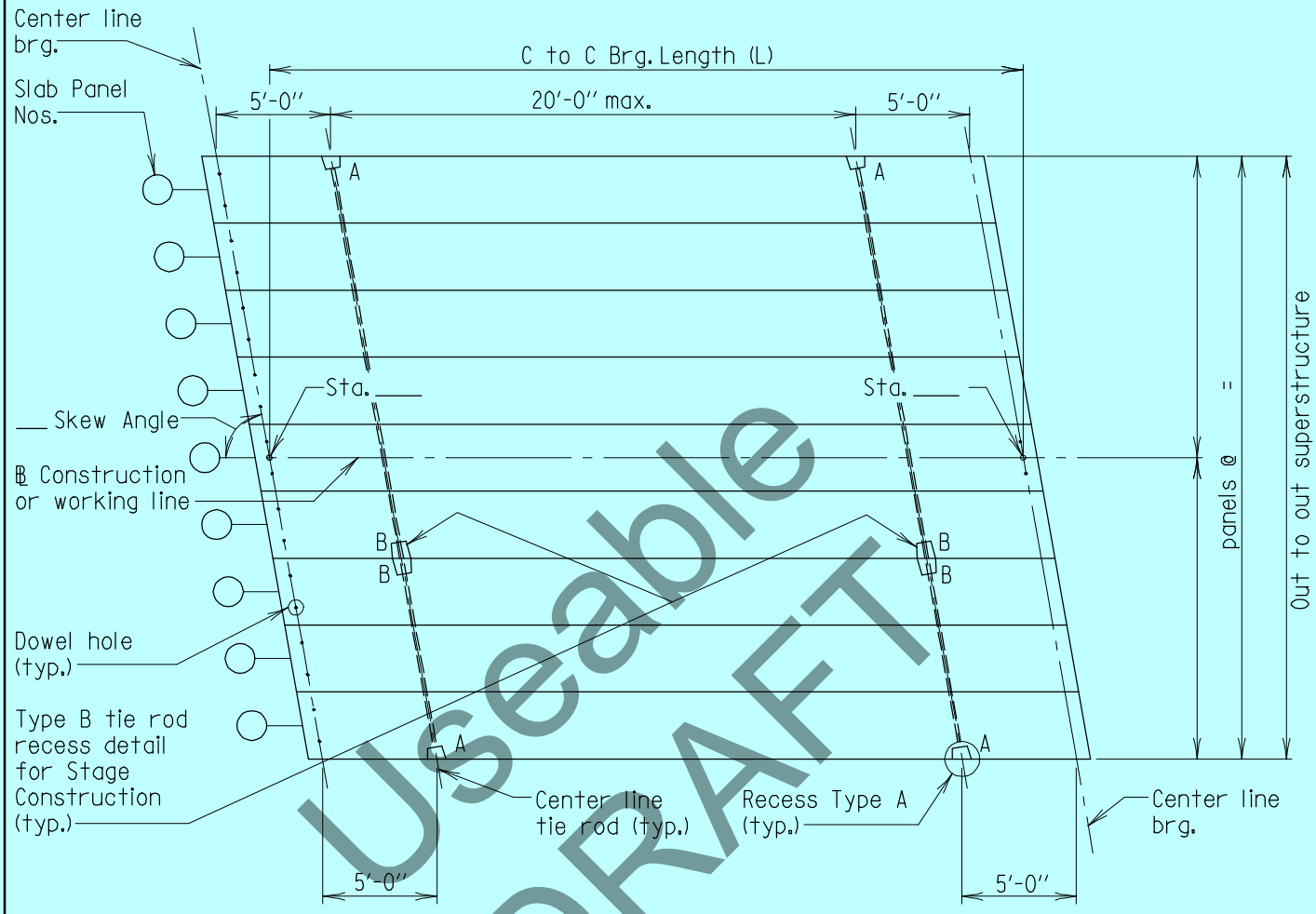

Useable DRAFT

PLAN
Scale: None

Notes:
1. For Type A & B recess details see Std. No. SUP-SLAB-401, for Type B Tie Rod Details for Stage Construction see Std. No. SUP-SLAB-401.
2. Skew angle shall not be less then 60°.

* USEABLE DRAFT* | * FOR OFFICE USE ONLY *

APPROVAL
_____ DIRECTOR OFFICE OF STRUCTURES
DATE: 09/01/15

REVISIONS	
SHA	FHWA

FHWA APPROVAL
DATE:

STATE OF MARYLAND
DEPARTMENT OF TRANSPORTATION
STATE HIGHWAY ADMINISTRATION
OFFICE OF STRUCTURES

PRECAST SLAB UNIT AND TIE ROD LAYOUT
SLABS 30' AND LESS
WITH STAGE CONSTRUCTION

NO. SUP-SLAB-301 SHEET 1 OF 1

SUPERSTRUCTURE SLABS

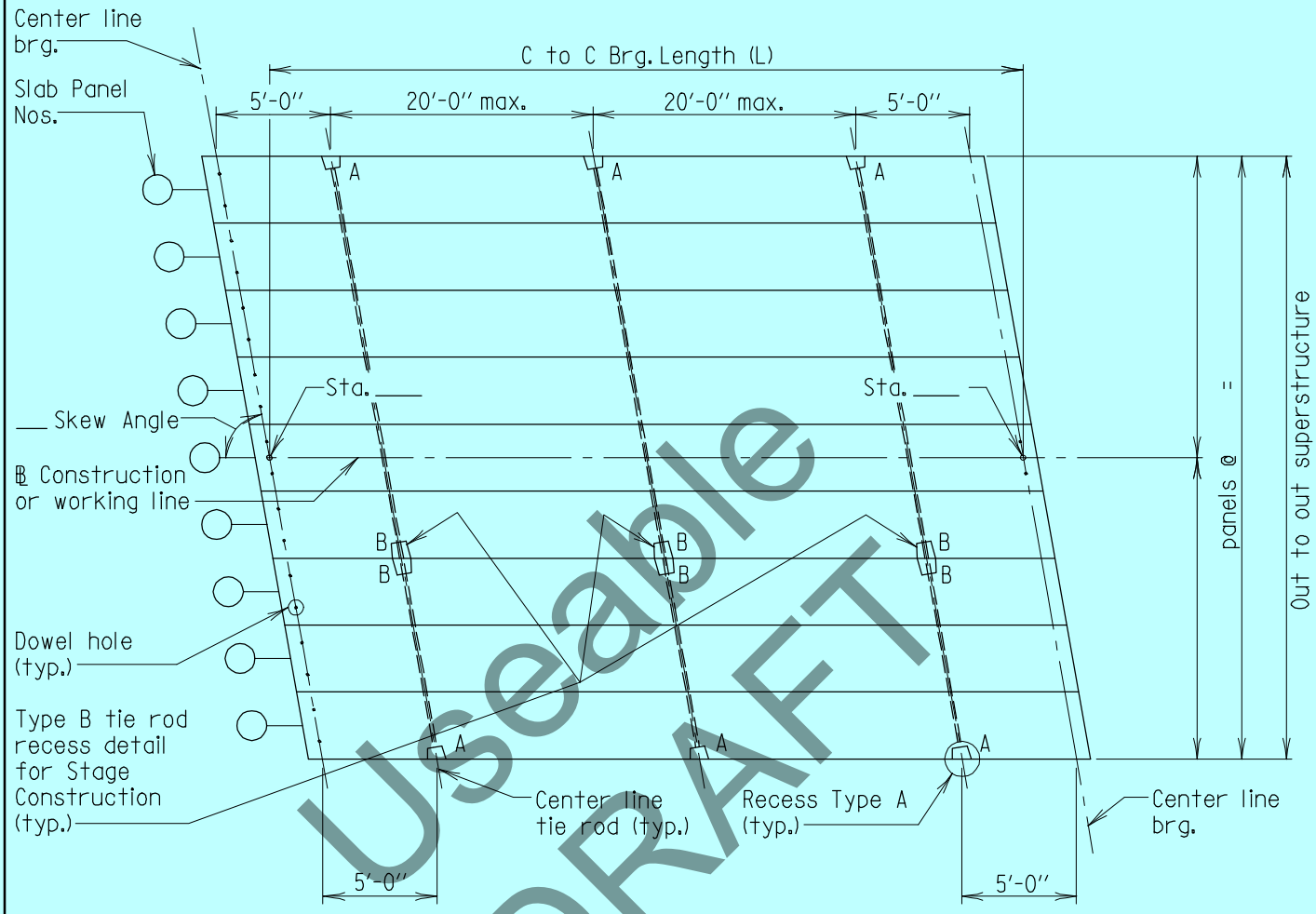

Useable DRAFT

PLAN
Scale: None

Notes:
1. For Type A & B recess details see Std. No. SUP-SLAB-401, for Type B Tie Rod Details for Stage Construction see Std. No. SUP-SLAB-401.
2. Skew angle shall not be less then 60°.

* USEABLE DRAFT* | * FOR OFFICE USE ONLY *

APPROVAL	
_____ DIRECTOR OFFICE OF STRUCTURES	
DATE: 09/01/15	
REVISIONS	
SHA	FHWA

FHWA APPROVAL
DATE:

STATE OF MARYLAND
DEPARTMENT OF TRANSPORTATION
STATE HIGHWAY ADMINISTRATION
OFFICE OF STRUCTURES

PRECAST SLAB UNIT AND TIE ROD LAYOUT
SLABS GREATER THAN 30' UP TO 50'
WITH STAGE CONSTRUCTION

NO. SUP-SLAB-302 SHEET 1 OF 1

SUPERSTRUCTURE SLABS

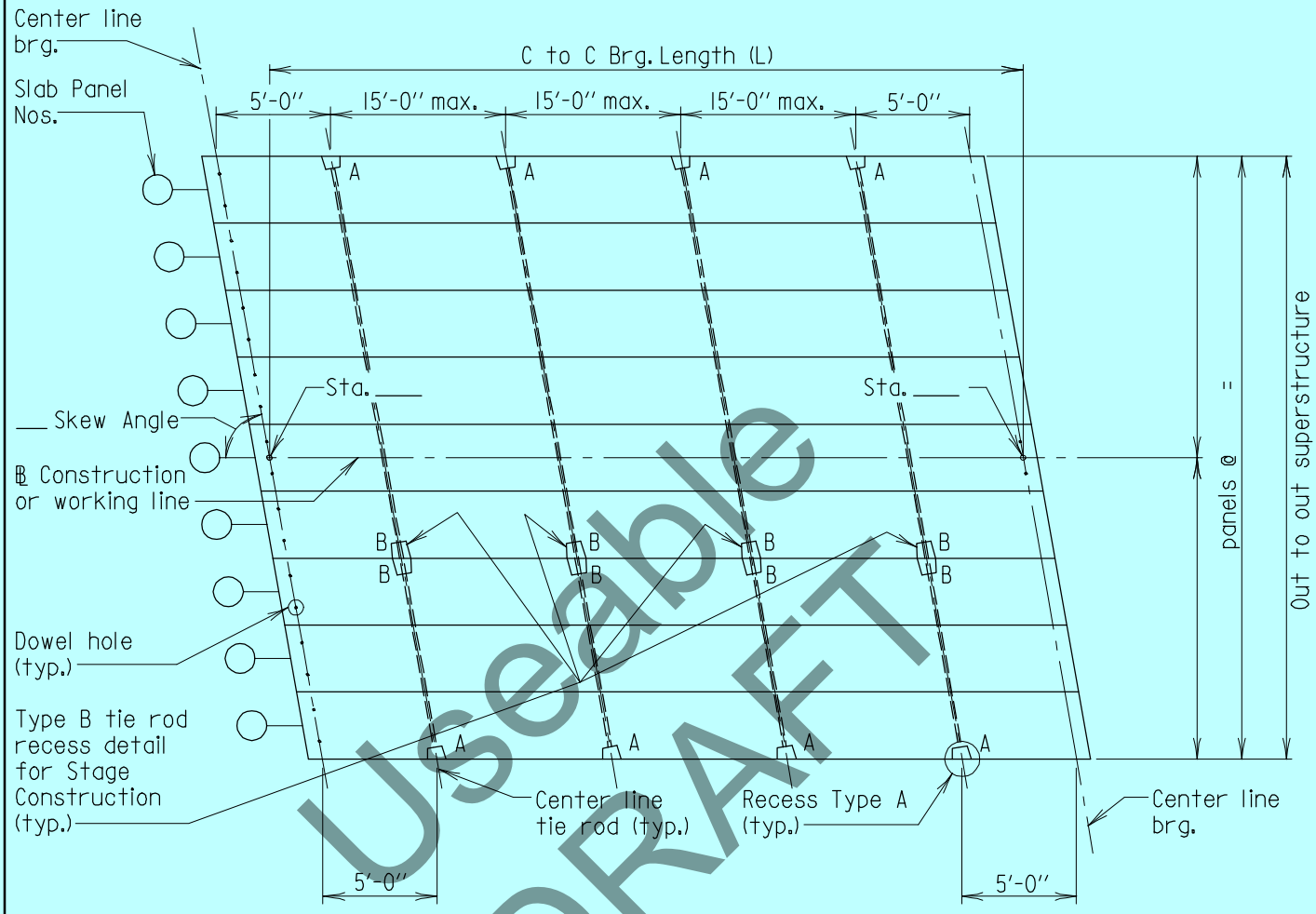

Useable DRAFT

PLAN
Scale: None

Notes:
1. For Type A & B recess details see Std. No. SUP-SLAB-401, for Type B Tie Rod Details for Stage Construction see Std. No. SUP-SLAB-401.
2. Skew angle shall not be less then 60°.

* USEABLE DRAFT* | * FOR OFFICE USE ONLY *

APPROVAL
_____ DIRECTOR OFFICE OF STRUCTURES
DATE: 09/01/15

REVISIONS	
SHA	FHWA

FHWA APPROVAL
DATE:

STATE OF MARYLAND
DEPARTMENT OF TRANSPORTATION
STATE HIGHWAY ADMINISTRATION
OFFICE OF STRUCTURES

PRECAST SLAB UNIT AND TIE ROD LAYOUT
SLABS GREATER THAN 50'
FOR STAGE CONSTRUCTION

NO. SUP-SLAB-303 SHEET 1 OF 1

SUPERSTRUCTURE SLABS

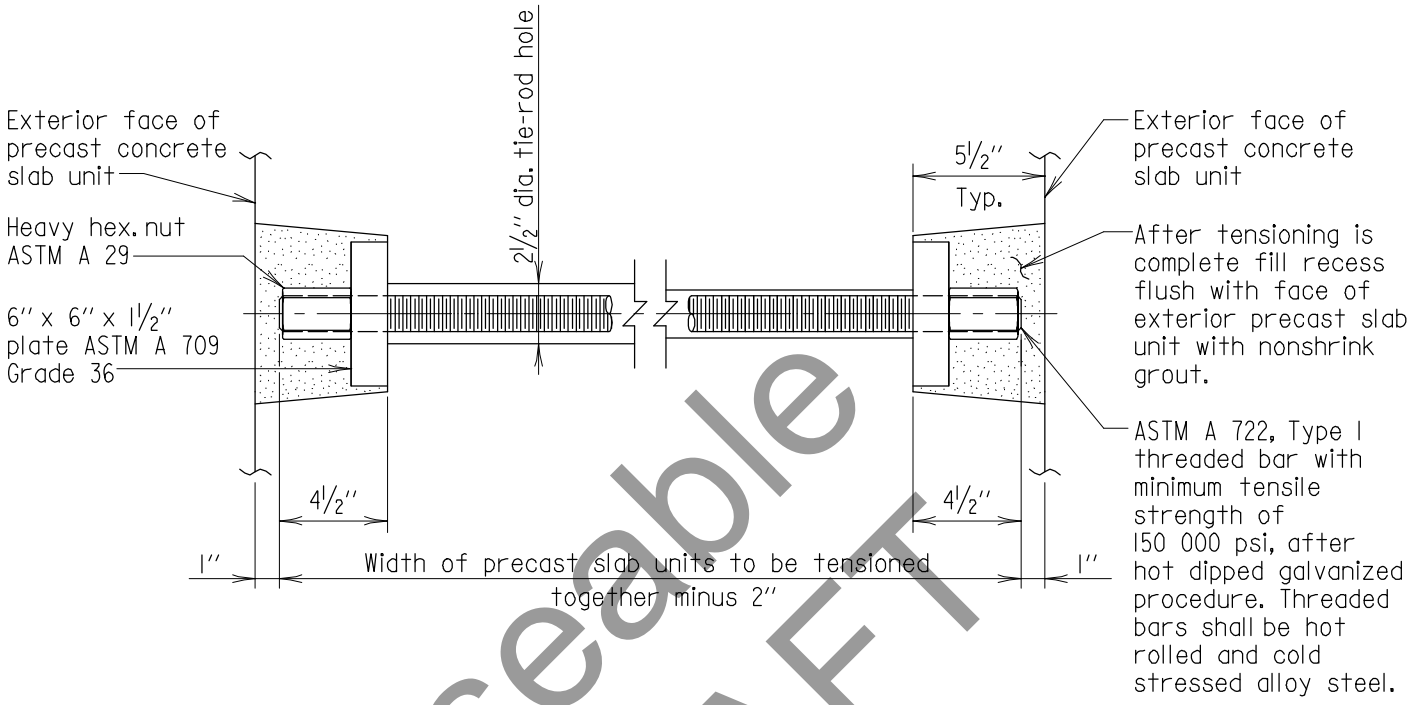

SECTION
LATERAL TIE-ROD DETAIL
Scale: 1½'' = 1'-0''

Useable DRAFT

Rod Diameter (inches)	Initial Tension Force (lb)	Final Tension Force (lb)	Plate Hole Diameter (inches)	Minimum Root Area through threads (in^2)
1¼	20 000	120 000	1⅝	0.91

Notes:
1. For tie-rod tensioning procedures, see Contract Plans and 440.03.20.
2. All nuts, plates and tie-rods shall be hot dipped galvanized.
3. All nonshrink grout shall conform to 902.11(C).
4. Heavy hex. nut shall be supplied by tie-rod manufacturer and develop full tensile strength of tie-rod.

* USEABLE DRAFT*

APPROVAL	
_____ DIRECTOR OFFICE OF STRUCTURES	
DATE: 09/01/15	
REVISIONS	
SHA	FHWA

FHWA APPROVAL
DATE:

STATE OF MARYLAND
DEPARTMENT OF TRANSPORTATION
STATE HIGHWAY ADMINISTRATION
OFFICE OF STRUCTURES

PRECAST CONCRETE SLAB UNITS
TIE-ROD DETAILS

NO. SUP-SLAB-401 SHEET 1 OF 3

SUPERSTRUCTURE SLABS

Note:
For skewed bridges, the Contractor has the option providing a tapered 1½" min. thickness x 6"x 6" plate or forming the tie-rod end of the tie-rod recess to be 90° to the centerline of the tie-rod. No additional compensation will be allowed for whatever option is selected.

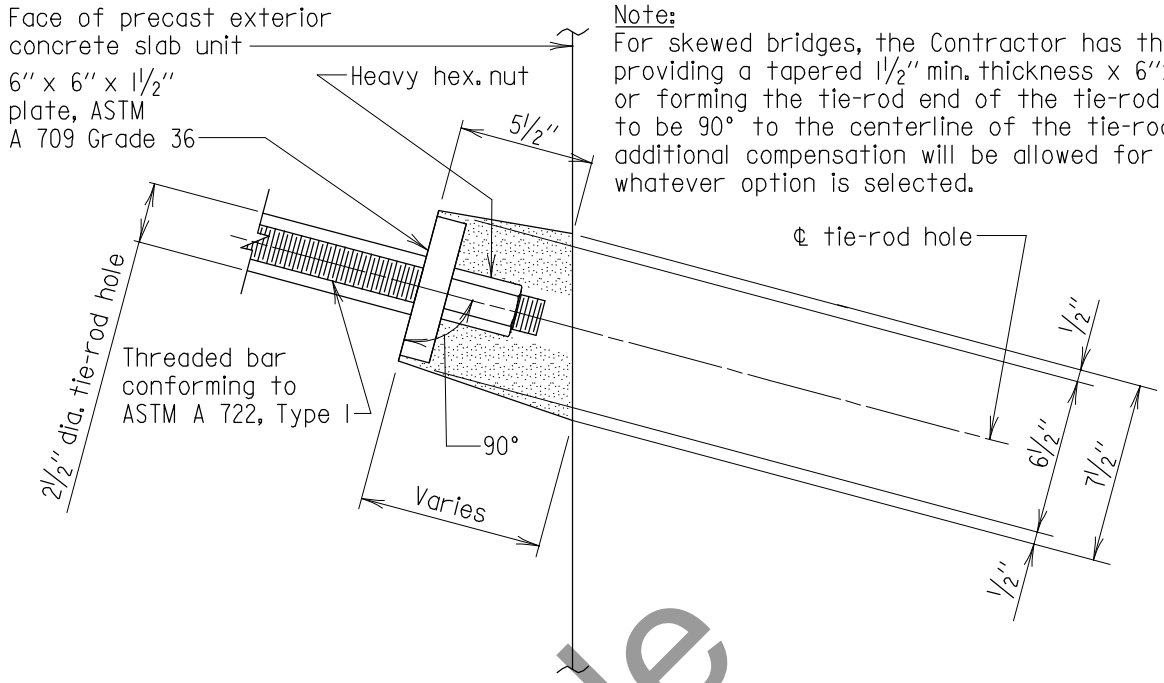

PLAN

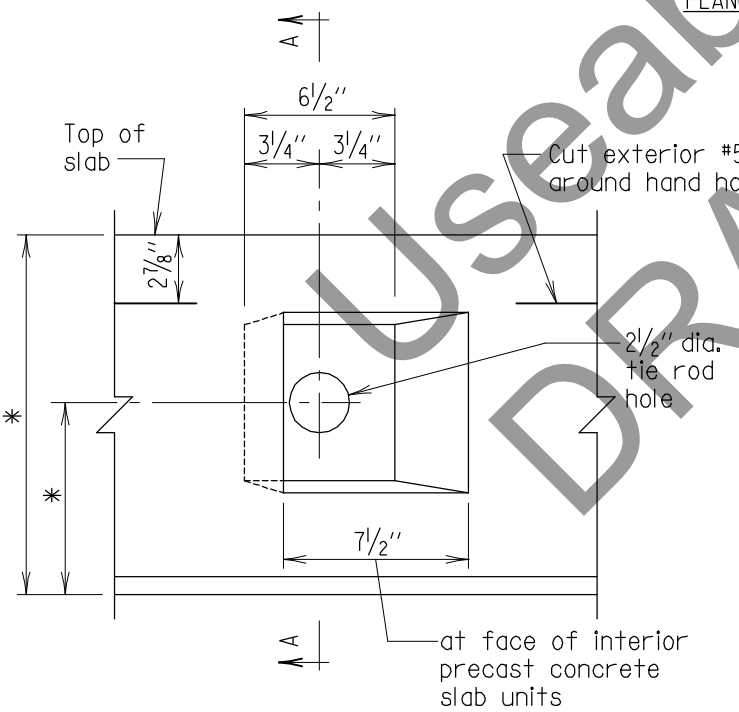

ELEVATION

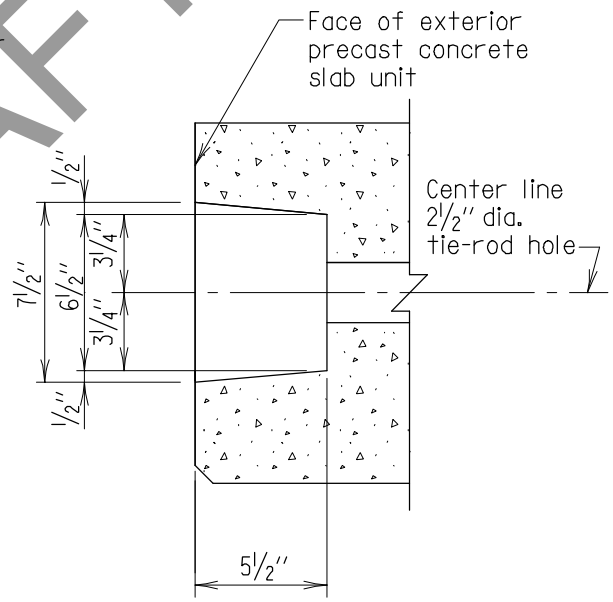

SECTION A-A

TIE-ROD RECESS DETAILS - TYPE A

Scale: 1½" = 1'-0"

* See precast concrete slab units details for dimensions.

Useable DRAFT

* USEABLE DRAFT *

Notes:
1. For tie-rod tensioning procedures, see Contract Plans and 440.03.20.
2. All tie-rods, plates and nuts shall be hot dipped galvanized.
3. All nonshrink grout shall conform to 902.11(C).
4. Shear keys in slabs not shown for clarity.

APPROVAL	
_____ DIRECTOR OFFICE OF STRUCTURES	
DATE: 09/01/15	
REVISIONS	
SHA	FHWA

FHWA APPROVAL
DATE:

STATE OF MARYLAND
DEPARTMENT OF TRANSPORTATION
STATE HIGHWAY ADMINISTRATION
OFFICE OF STRUCTURES

PRECAST CONCRETE SLAB UNITS
TIE-ROD DETAILS
TYPE A

NO. SUP-SLAB-401 SHEET 2 OF 3

SUPERSTRUCTURE SLABS

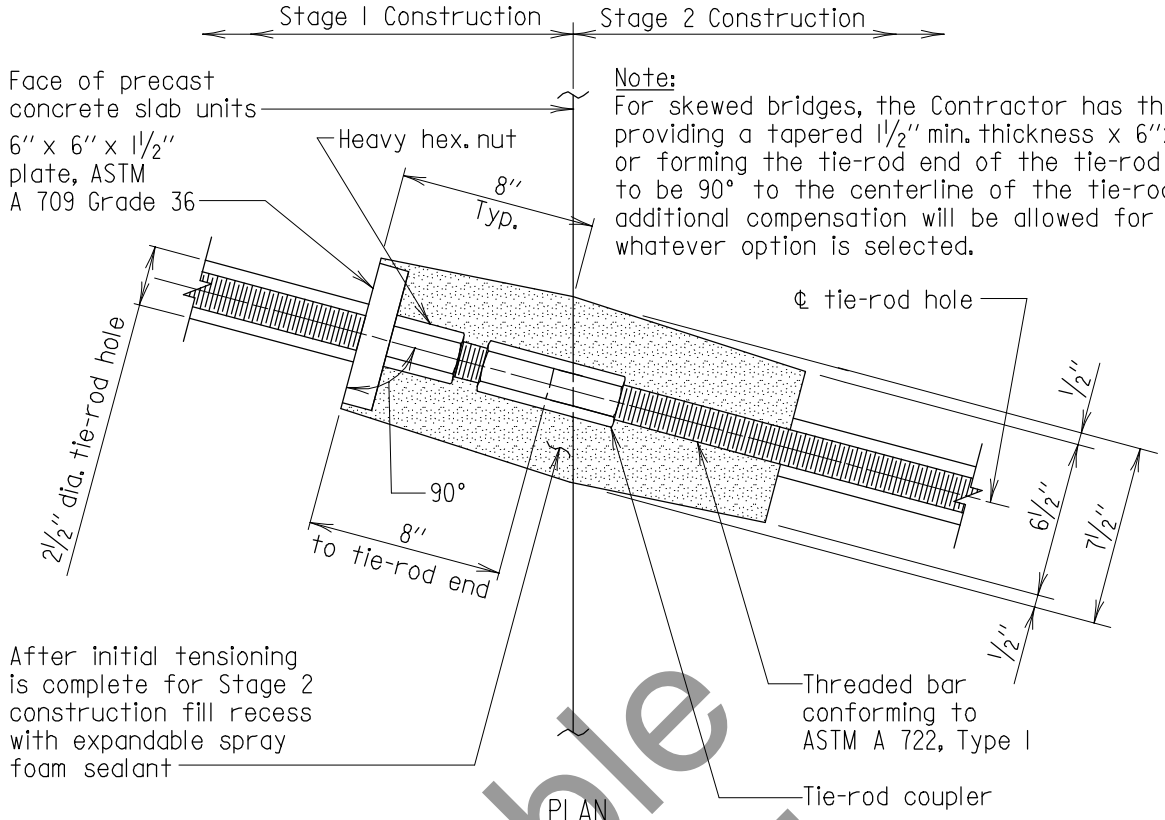

Note:
For skewed bridges, the Contractor has the option providing a tapered 1½" min. thickness x 6" x 6" plate or forming the tie-rod end of the tie-rod recess to be 90° to the centerline of the tie-rod. No additional compensation will be allowed for whatever option is selected.

PLAN

LATERAL TIE-ROD FOR STAGE CONSTRUCTION

Scale: 1½" = 1'-0"

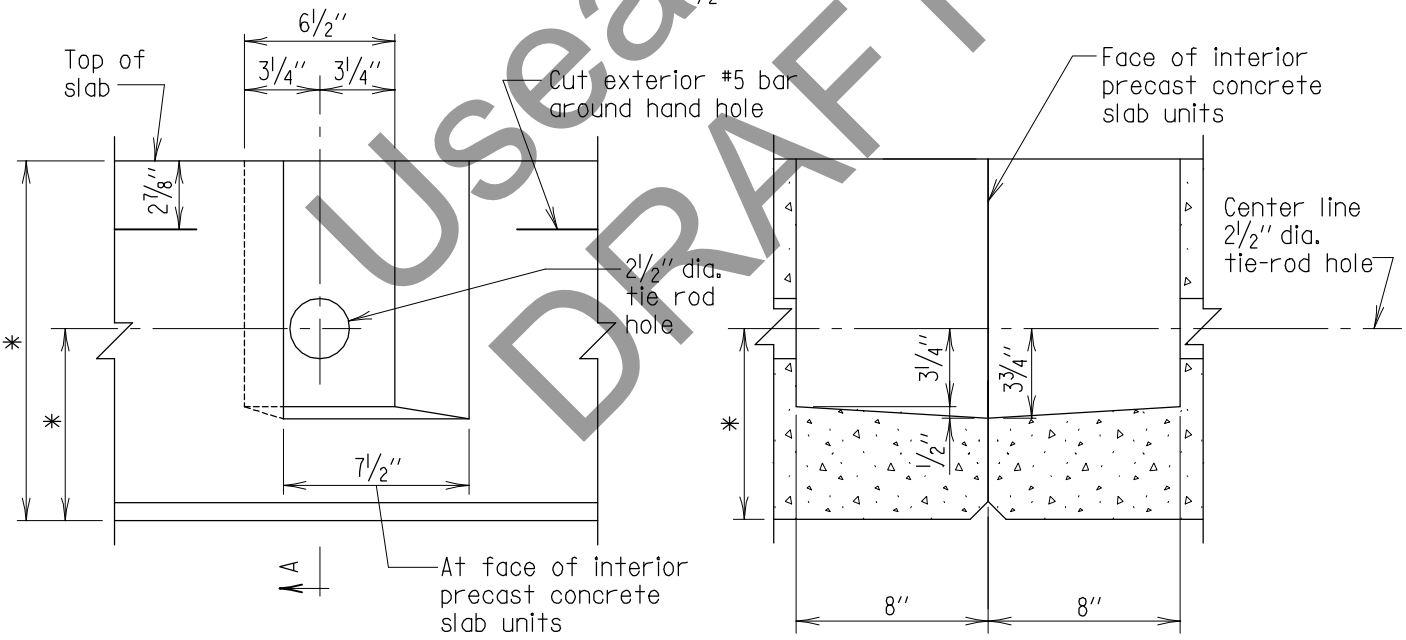

ELEVATION

SECTION A-A

TIE-ROD RECESS DETAILS - TYPE B

Scale: 1½" = 1'-0"

* See precast concrete slab units details for dimensions.

Notes:
1. For tie-rod tensioning procedures, see Contract Plans and 440.03.20.
2. All couplers tie-rods, plates and nuts shall be hot dipped galvanized.
3. All nonshrink grout shall conform to 902.11(C).
4. Shear keys in slabs not shown for clarity.
5. Coupler shall be supplied by tie rod manufacturer and develop full tensile strength of tie rod.

* USEABLE DRAFT*

APPROVAL	
_____ DIRECTOR OFFICE OF STRUCTURES	
DATE: 09/01/15	
REVISIONS	
SHA	FHWA
FHWA APPROVAL	
DATE:	

STATE OF MARYLAND
DEPARTMENT OF TRANSPORTATION
STATE HIGHWAY ADMINISTRATION
OFFICE OF STRUCTURES

PRECAST CONCRETE SLAB UNITS
TIE-ROD DETAILS
TYPE B

NO. SUP-SLAB-401 SHEET 3 OF 3

SUPERSTRUCTURE SLABS

Useable DRAFT

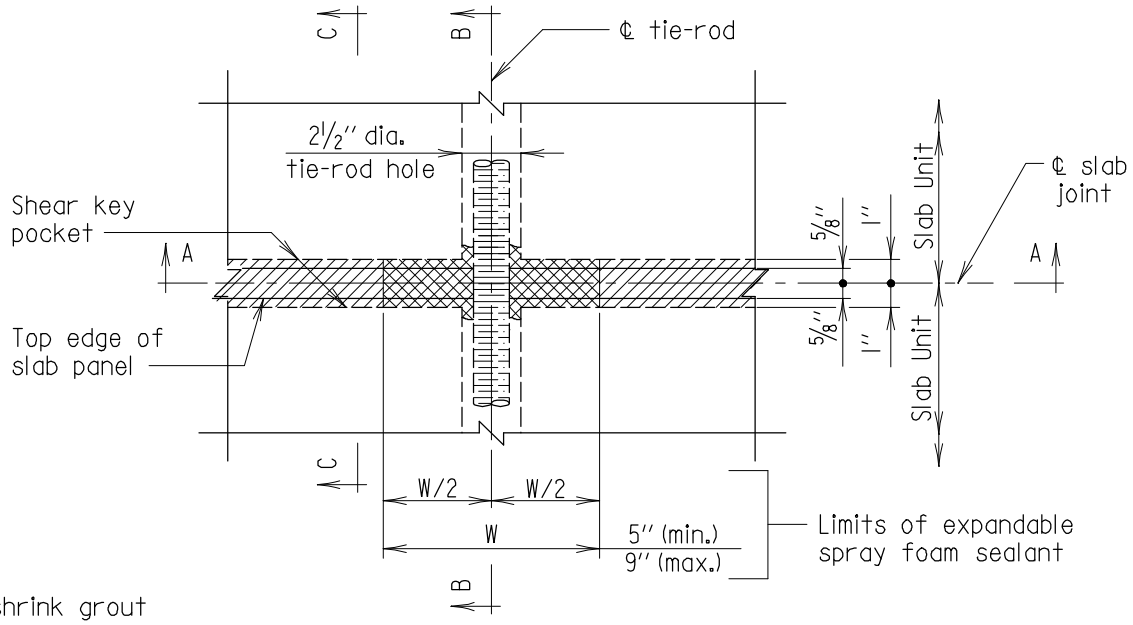

Nonshrink grout

Expandable spray foam sealant

PLAN

Scale: 1½" = 1'-0"

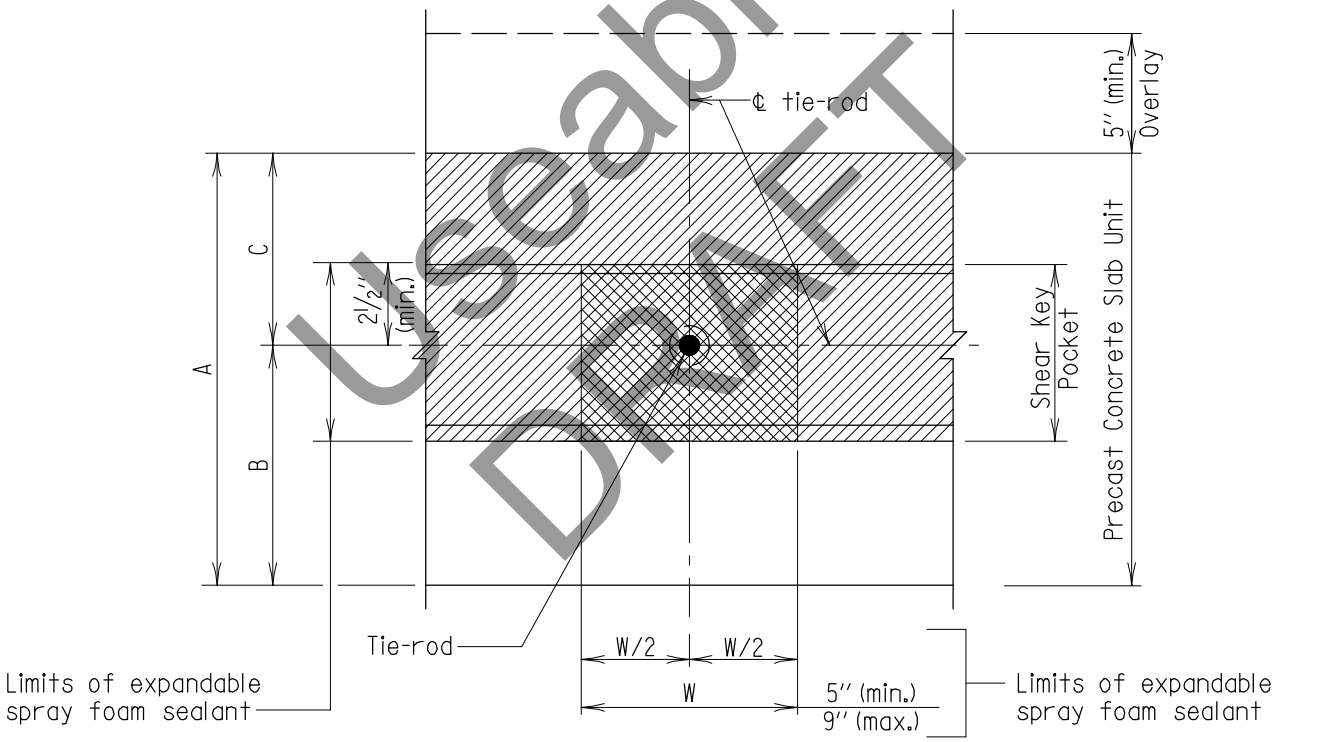

SECTION A-A

Scale: 1½" = 1'-0"

Useable DRAFT

Notes:

1. For shear key placement procedures, see 440.03.20.
2. All nonshrink grout shall conform to 902.11(C).
3. Shear keys shall not be placed on the exposed face of the exterior slab units unless where specifically called for on the plans to accomodate future widenings.
4. See sheet 2 of 2 for Section B-B and Section C-C and A, B, C dimensions.

* USEABLE DRAFT*

APPROVAL	
_____ DIRECTOR OFFICE OF STRUCTURES	
DATE: 09/01/15	
REVISIONS	
SHA	FHWA
FHWA APPROVAL	
DATE:	

STATE OF MARYLAND
DEPARTMENT OF TRANSPORTATION
STATE HIGHWAY ADMINISTRATION
OFFICE OF STRUCTURES

PRECAST CONCRETE SLAB UNITS
SHEAR KEY DETAILS

NO. SUP-SLAB-501 SHEET 1 OF 2

SUPERSTRUCTURE SLABS

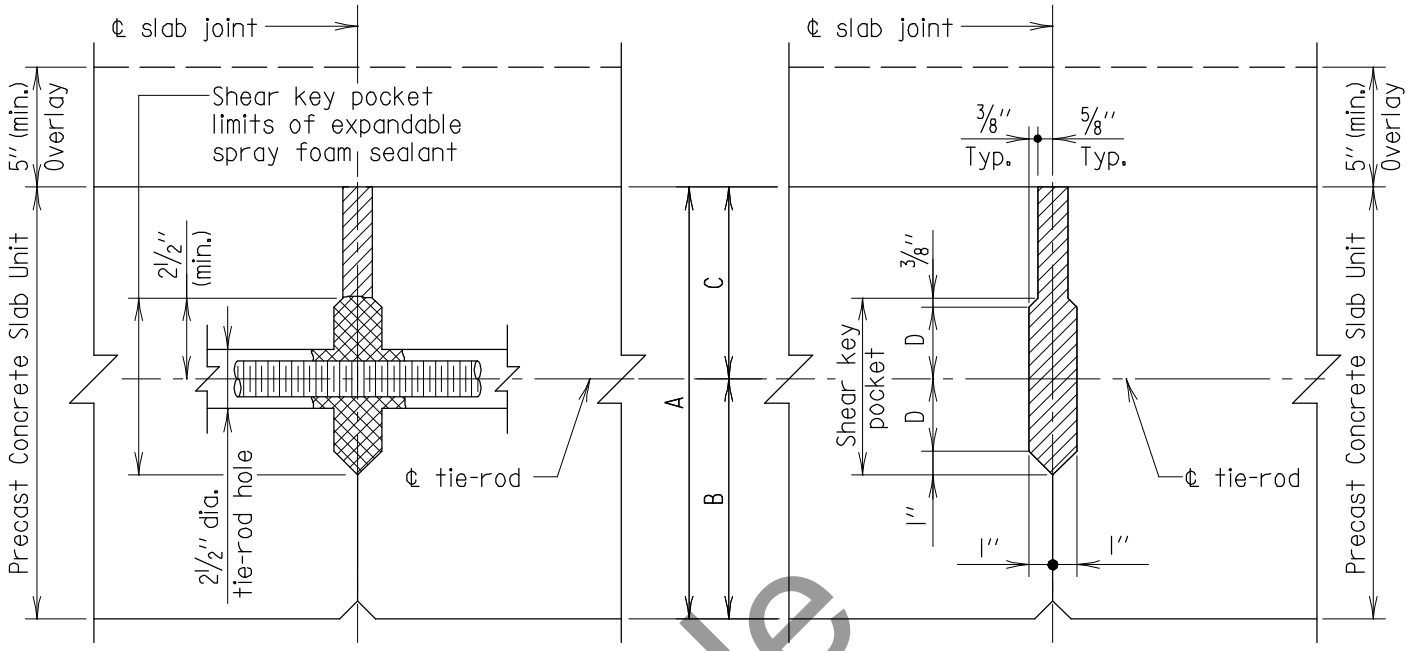

SECTION B-B

SECTION C-C

SHEAR KEY DETAILS

Scale: 1 1/2" = 1'-0"

Nonshrink grout

Expandable spray foam sealant

Useable DRAFT

Precast Concrete Slab Panel	A	B	C	D
Simple Span 20'-0" or less	1'-6"	10"	8"	3"
Simple Span greater than 20'-0" to 25'-0"	1'-6"	10"	8"	3"
Simple Span greater than 25'-0" to 30'-0"	1'-6"	10"	8"	3"
Simple Span greater than 30'-0" to 35'-0"	1'-9"	1'-0"	9"	5"
Simple Span greater than 35'-0" to 40'-0"	2'-0"	1'-2"	10"	5"
Simple Span greater than 40'-0" to 45'-0"	2'-0"	1'-2"	10"	5"
Simple Span greater than 45'-0" to 50'-0"	2'-3"	1'-4"	11"	7"
Simple Span greater than 50'-0" to 55'-0"	2'-6"	1'-4"	1'-2"	7"

Notes:

1. For shear key placement procedures, see 440.03.20.
2. All nonshrink grout shall conform to 902.11(C).
3. Shear keys shall not be placed on the exposed face of the exterior slab units unless where specifically called for on the plans to accomodate future widenings.

* USEABLE DRAFT*

APPROVAL

_____ DIRECTOR
OFFICE OF STRUCTURES

DATE: 09/01/15

REVISIONS

SHA	FHWA

FHWA APPROVAL
DATE:

STATE OF MARYLAND
DEPARTMENT OF TRANSPORTATION
STATE HIGHWAY ADMINISTRATION
OFFICE OF STRUCTURES

PRECAST CONCRETE SLAB UNITS
SHEAR KEY DETAILS

NO. SUP-SLAB-501

SHEET 2 OF 2

SUPERSTRUCTURE SLABS

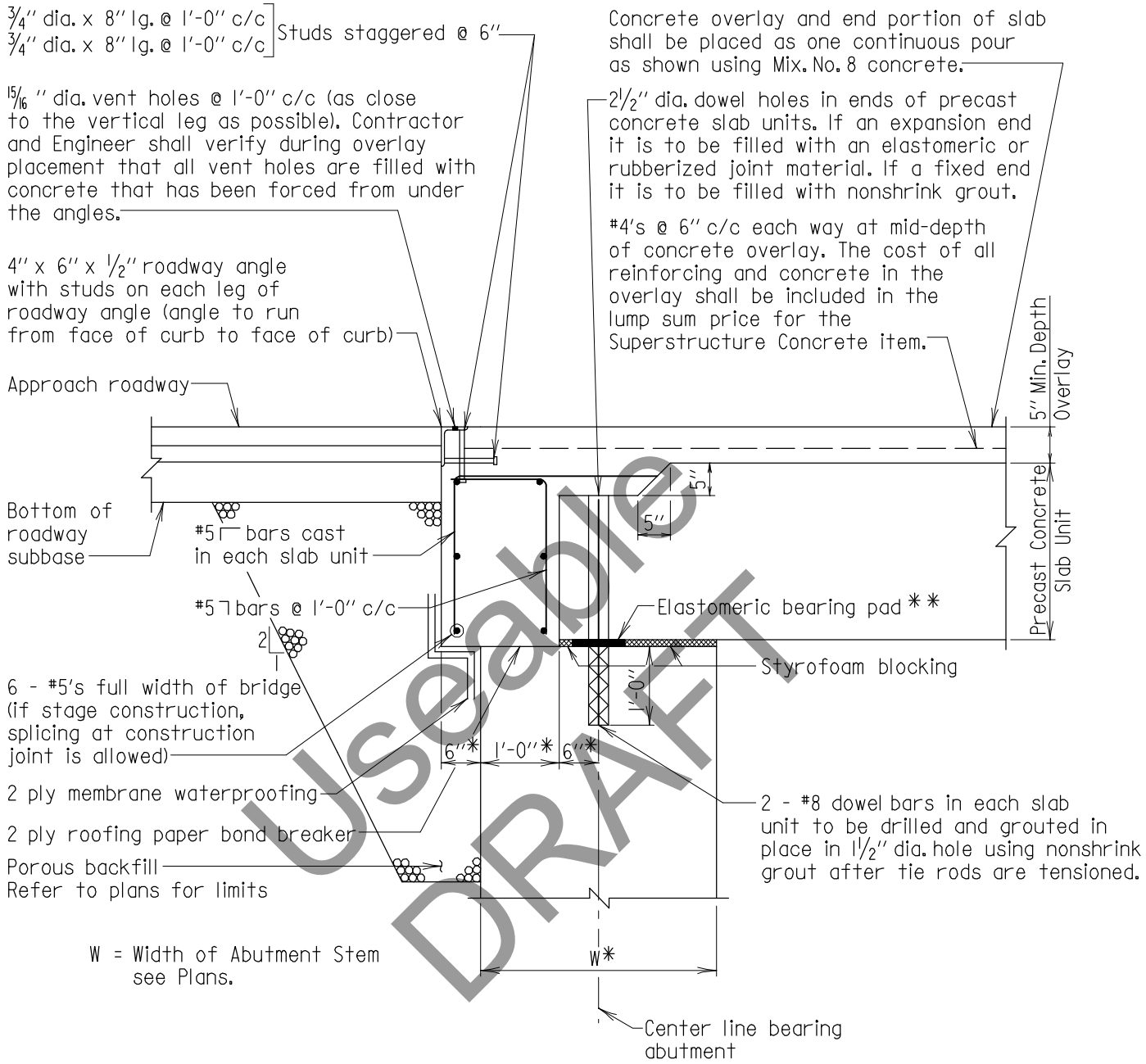

Useable DRAFT

ABUTMENT - SECTION

Scale: 1/2" = 1'-0"

* Measured prependicular to centerline of bearing.

** All elastomeric bearing pads shall be placed with an epoxy adhesive in accordance with Section 432.03.04.

Notes:

1. All reinforcing steel to be epoxy coated.
2. All nonshrink grout shall conform to 902.11(C).

* USEABLE DRAFT*

APPROVAL	
_____ DIRECTOR OFFICE OF STRUCTURES DATE: 09/01/15	
REVISIONS	
SHA	FHWA
FHWA APPROVAL	
DATE:	

STATE OF MARYLAND
DEPARTMENT OF TRANSPORTATION
STATE HIGHWAY ADMINISTRATION
OFFICE OF STRUCTURES

PRECAST CONCRETE SLAB UNIT DETAIL AT ABUTMENT

NO. SUP-SLAB-601 SHEET 1 OF 1

SUPERSTRUCTURE SLABS

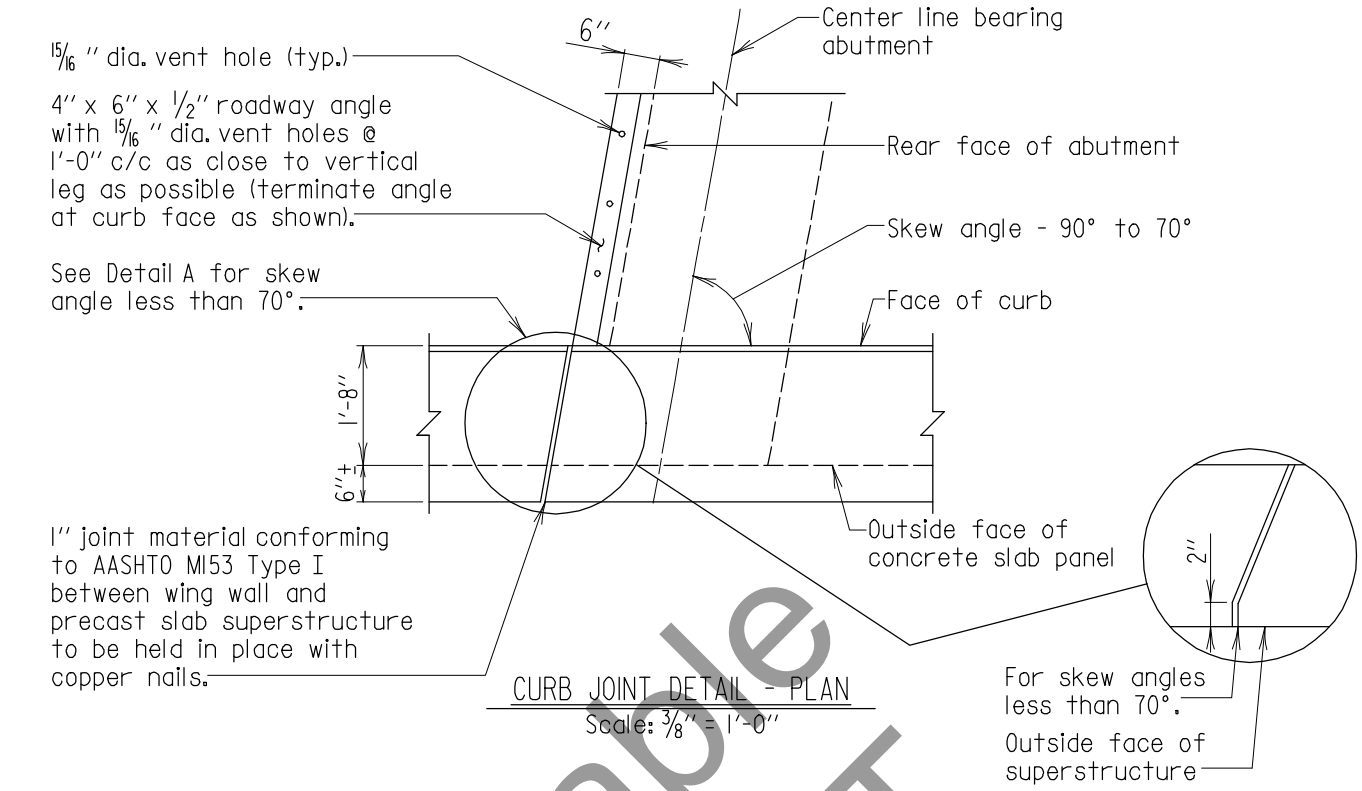

CURB JOINT DETAIL - PLAN
Scale: 3/8" = 1'-0"

DETAIL A
Scale: None

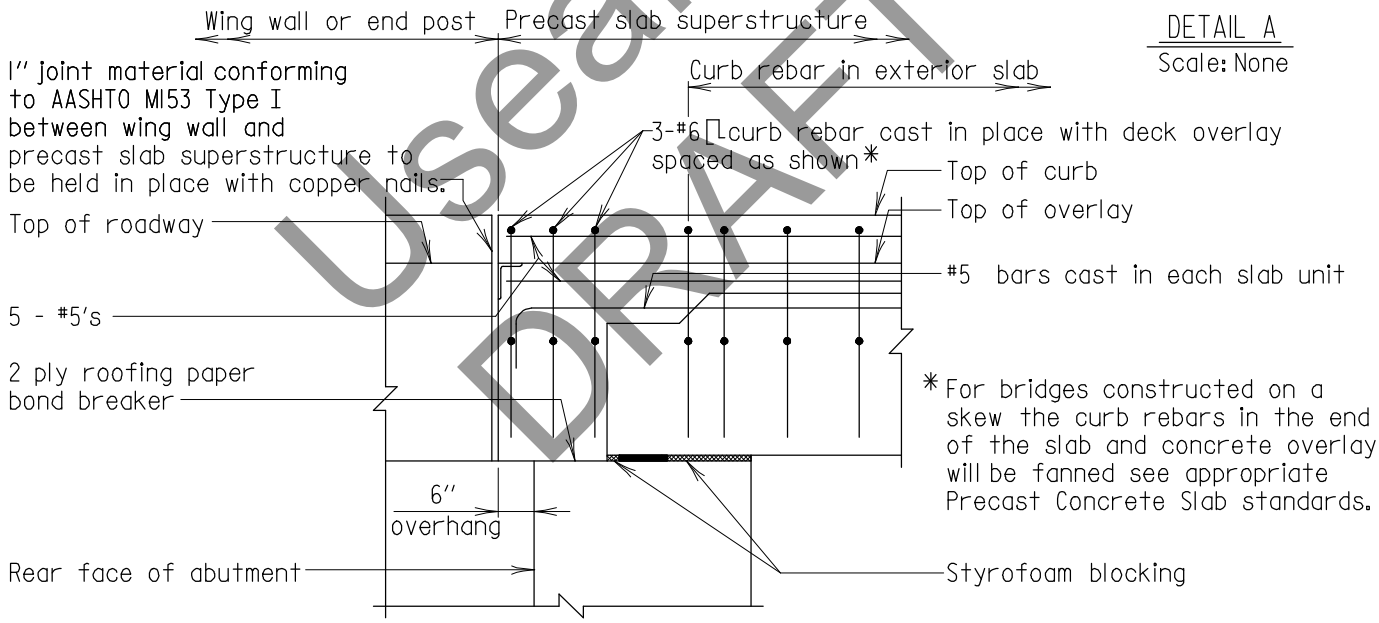

CURB JOINT DETAIL - ELEVATION
Scale: 3/8" = 1'-0"

Useable DRAFT

Notes:
1. All reinforcing steel to be epoxy coated.
2. Railing not shown for clarity.
3. Double stirrups, longitudinal reinforcing steel and prestressing strands not shown for clarity.
4. For additional curb reinforcing details see Std. No. SUP-TB(TR)-301.

APPROVAL	
_____ DIRECTOR OFFICE OF STRUCTURES	
DATE:	
REVISIONS	
SHA	FHWA

FHWA APPROVAL
DATE:

* USEABLE DRAFT*

STATE OF MARYLAND
DEPARTMENT OF TRANSPORTATION
STATE HIGHWAY ADMINISTRATION
OFFICE OF STRUCTURES

PRECAST CONCRETE SLAB CURB JOINT DETAILS

NO. SUP-SLAB-602 SHEET 1 OF 1

SUPERSTRUCTURE SLABS

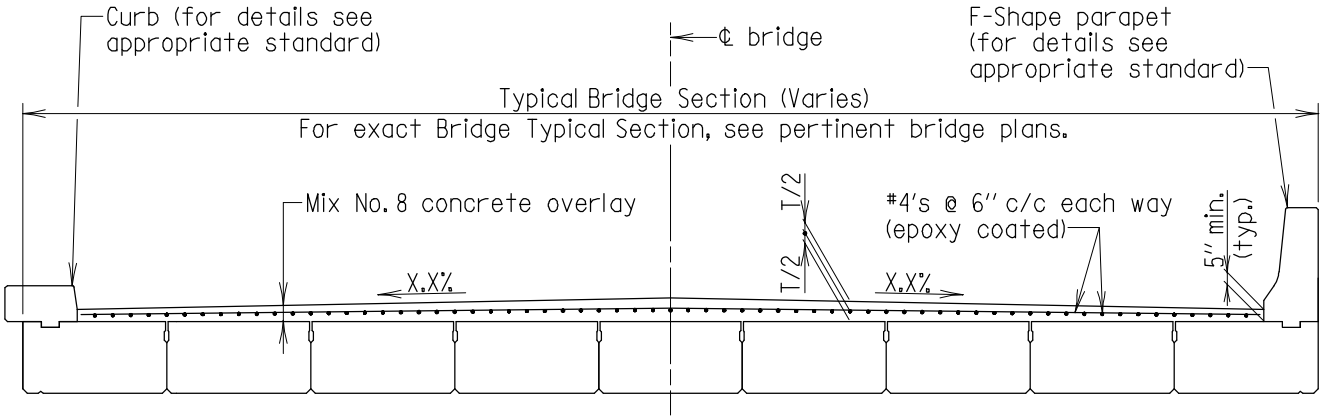

TYPICAL SECTION

Scale: 3/16'' = 1'-0''

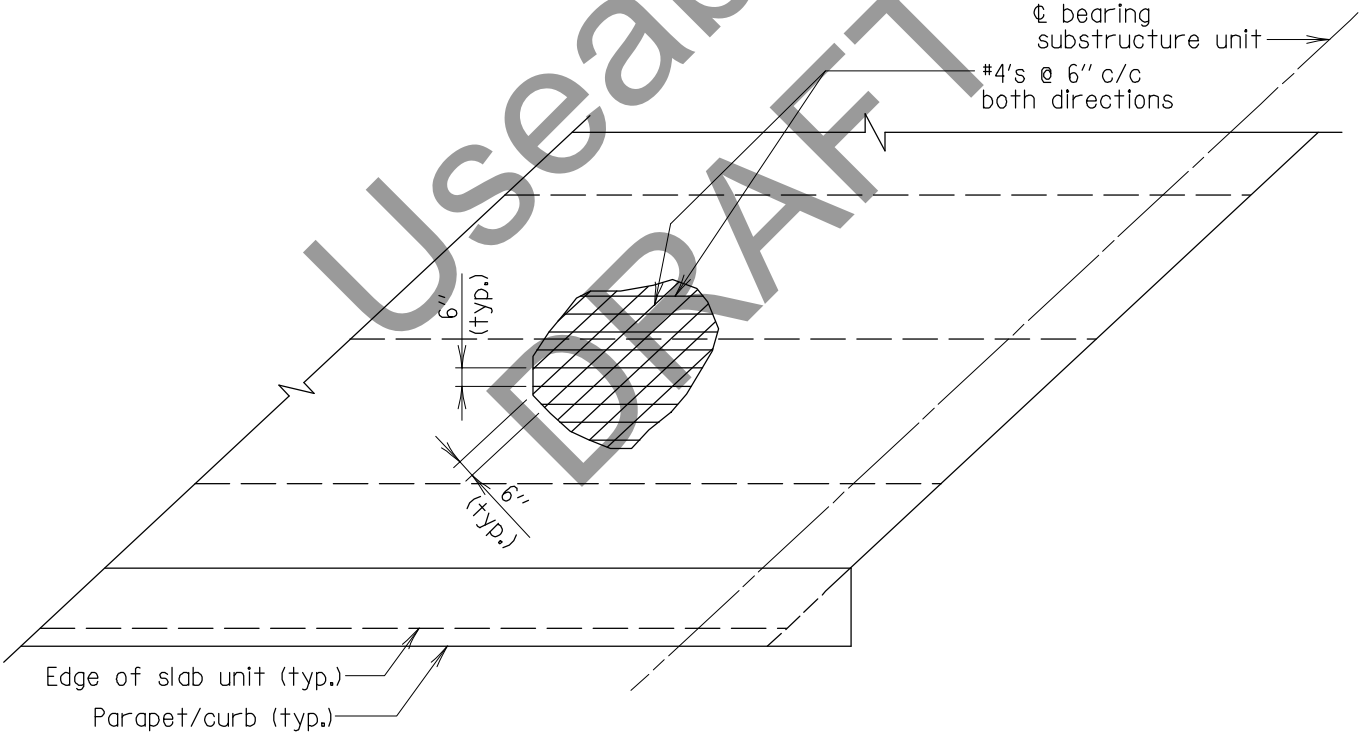

PARTIAL DECK OVERLAY PLAN

Scale: 3/16'' = 1'-0''

Useable DRAFT

* USEABLE DRAFT*

APPROVAL	
_____ DIRECTOR OFFICE OF STRUCTURES	
DATE: 09/01/15	
REVISIONS	
SHA	FHWA

FHWA APPROVAL

DATE:

STATE OF MARYLAND
DEPARTMENT OF TRANSPORTATION
STATE HIGHWAY ADMINISTRATION
OFFICE OF STRUCTURES

PRECAST CONCRETE SLAB PANEL BRIDGE
OVERLAY REINFORCEMENT DETAILS

NO. SUP-SLAB-701

SHEET 1 OF 1

SUPERSTRUCTURE SLAB

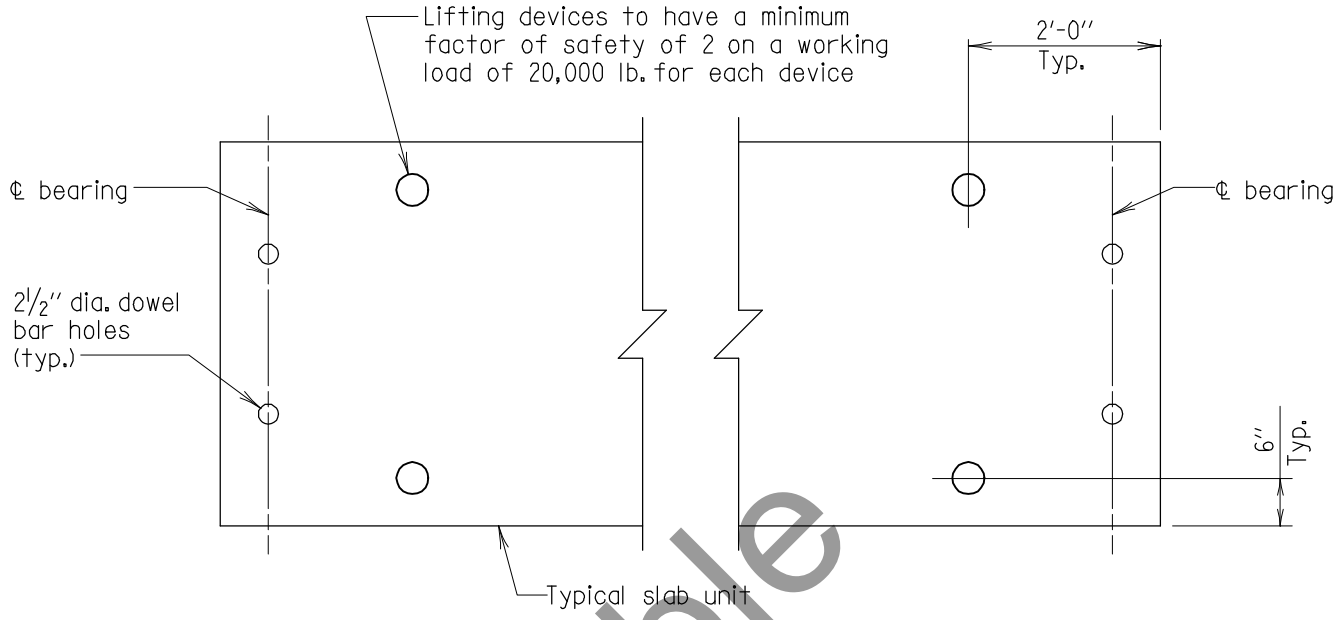

LIFTING DEVICES LOCATION (90° PANELS) - PLAN VIEW

Scale: ½" = 1'-0"

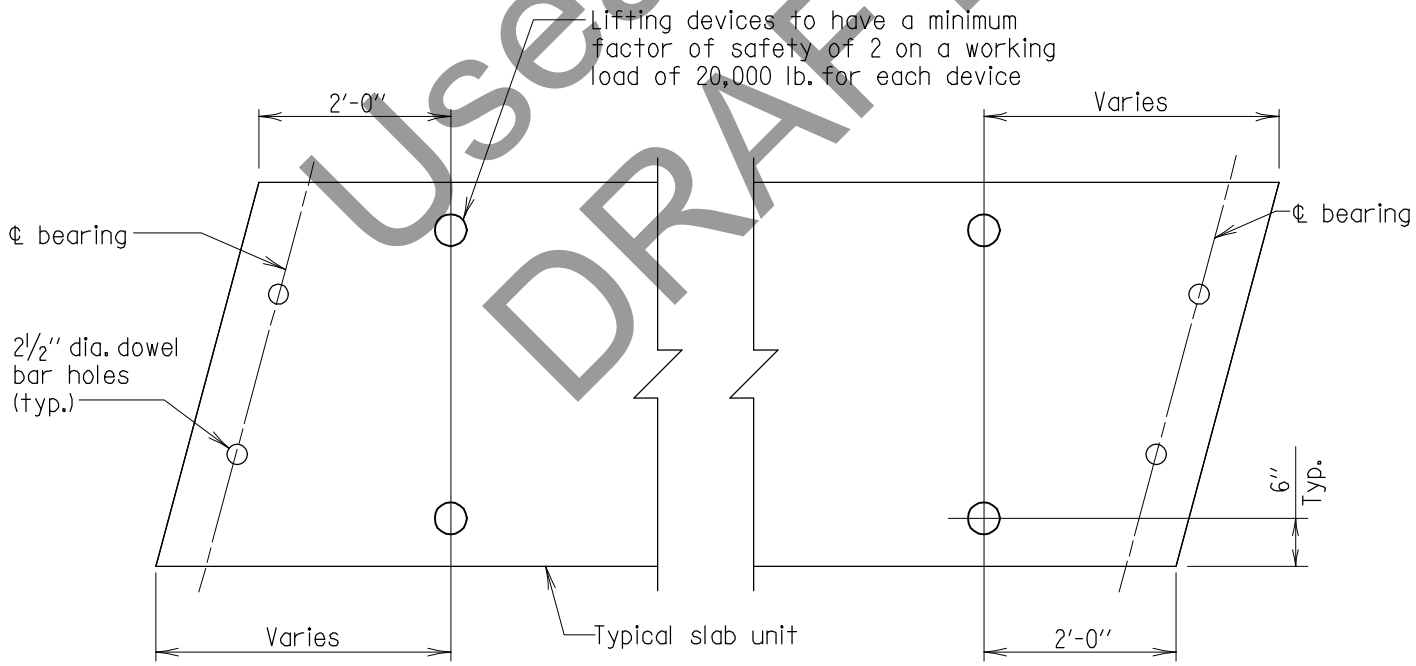

LIFTING DEVICES LOCATION (SKEWED PANELS) - PLAN VIEW

Scale: ½" = 1'-0"

Useable DRAFT

Notes:

1. If prestressing strands are used for the lifting device, they shall be cut flush with the slab surface prior to placing the overlay.
2. Lifting device working load of 20,000 lb. is satisfactory for all slab panels up to and including those 4' wide & 55' long.

* USEABLE DRAFT*

APPROVAL	
_____ DIRECTOR OFFICE OF STRUCTURES	
DATE: 09/01/15	
REVISIONS	
SHA	FHWA
FHWA APPROVAL	
DATE:	

STATE OF MARYLAND
DEPARTMENT OF TRANSPORTATION
STATE HIGHWAY ADMINISTRATION
OFFICE OF STRUCTURES

PRECAST CONCRETE SLAB PANEL LIFTING DEVICES LOCATION AND WORKING LOAD

NO. SUP-SLAB-801 SHEET 1 OF 1

SUPERSTRUCTURE SLAB

SUPERSTRUCTURE

CONCRETE SLABS

3 FT WIDE SLABS

(SUP-SLAB(3FT))

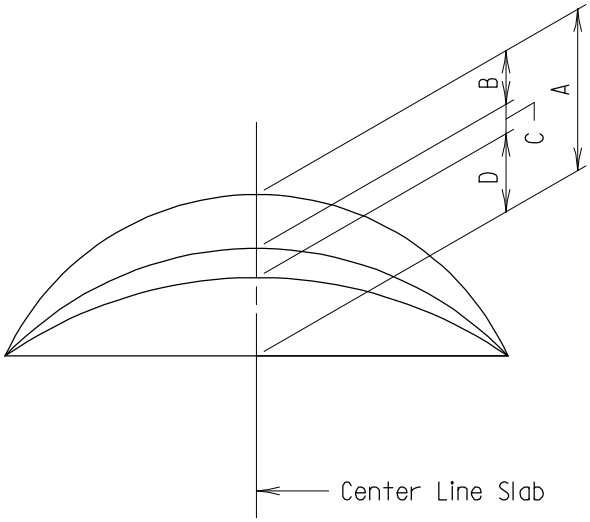

CAMBER DIAGRAM

Scale: None

Camber Notes:

Camber due to prestress plus slab dead load to be checked in the field.

The thickness of the concrete overlay shall be varied to compensate for any inaccuracies in the camber of slabs.

Prestress camber and dead load deflection data shown is theoretical and may vary with concrete strength, variable prestressing conditions and prestress losses.

Camber in slabs will increase due to concrete creep during storage. Precautions shall be taken by loading or other means to prevent additional camber from developing during storage of prestressed slabs.

A = Estimated camber due to prestress

B = Deflection due to dead load of prestressed slabs

C = Deflection due to dead load of cast-in-place concrete overlay, curbs and railing

D = Net final camber

Precast Concrete Slab Panel	A	B	C	D
Simple Span 20'-0" or less	3/16"	1/16"	1/16"	1/16"
Simple Span greater than 20'-0" to 25'-0"	3/8"	1/8"	1/8"	1/8"
Simple Span greater than 25'-0" to 30'-0"	13/16"	1/4"	3/16"	3/8"
Simple Span greater than 30'-0" to 35'-0"	1 1/16"	3/8"	1/4"	7/16"
Simple Span greater than 35'-0" to 40'-0"	1 1/4"	1/2"	1/4"	1/2"
Simple Span greater than 40'-0" to 45'-0"	2"	3/4"	13/16"	7/16"
Simple Span greater than 45'-0" to 50'-0"	2 1/4"	15/16"	7/16"	7/8"
Simple Span greater than 50'-0" to 55'-0"	2 9/16"	1 1/16"	1/2"	1"

Useable DRAFT

* USEABLE DRAFT *

APPROVAL	
_____ DIRECTOR OFFICE OF STRUCTURES	
DATE: 09/01/15	
REVISIONS	
SHA	FHWA
FHWA APPROVAL	
DATE:	

STATE OF MARYLAND
DEPARTMENT OF TRANSPORTATION
STATE HIGHWAY ADMINISTRATION
OFFICE OF STRUCTURES

SIMPLE SPAN EXTERIOR/INTERIOR
3'-0" PRECAST CONCRETE SLAB PANEL
DIAGRAM AND NOTES FOR CAMBER

NO. SUP-SLAB(3FT)-050 SHEET 1 OF 1

SUPERSTRUCTURE SLABS

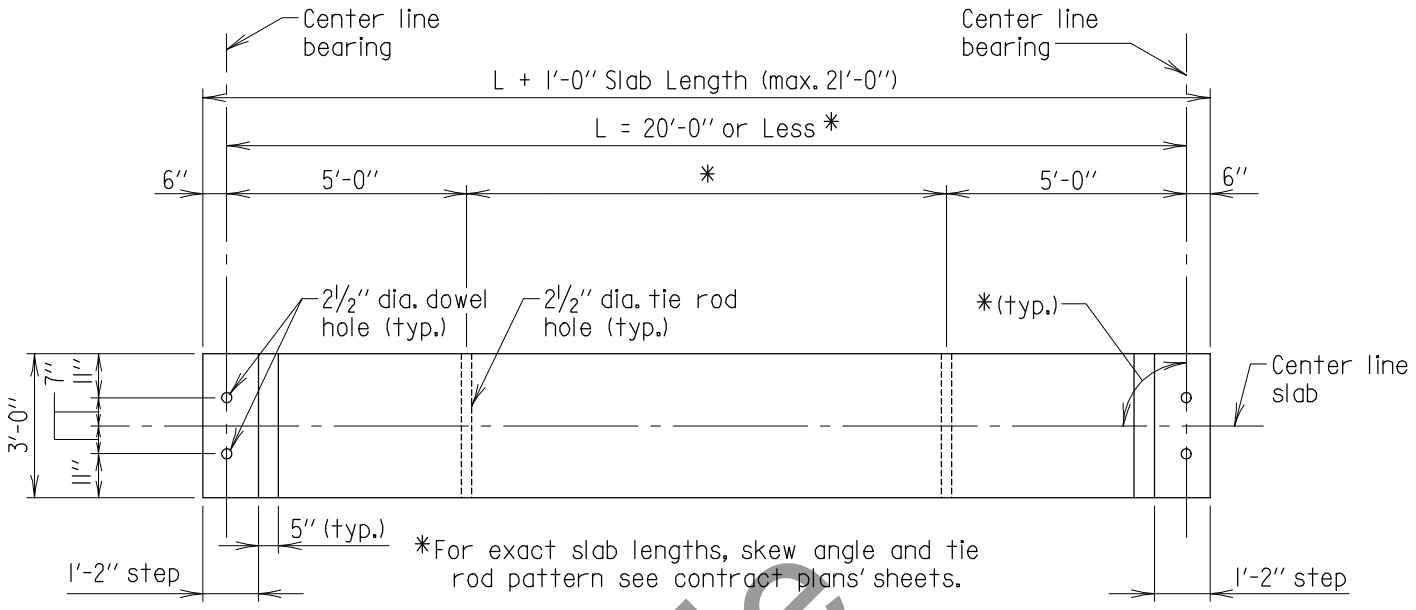

Note:
Reinforcing steel at ends of slab not shown for clarity.

3'-0" INTERIOR SLAB PLAN
Scale: 1/4" = 1'-0"

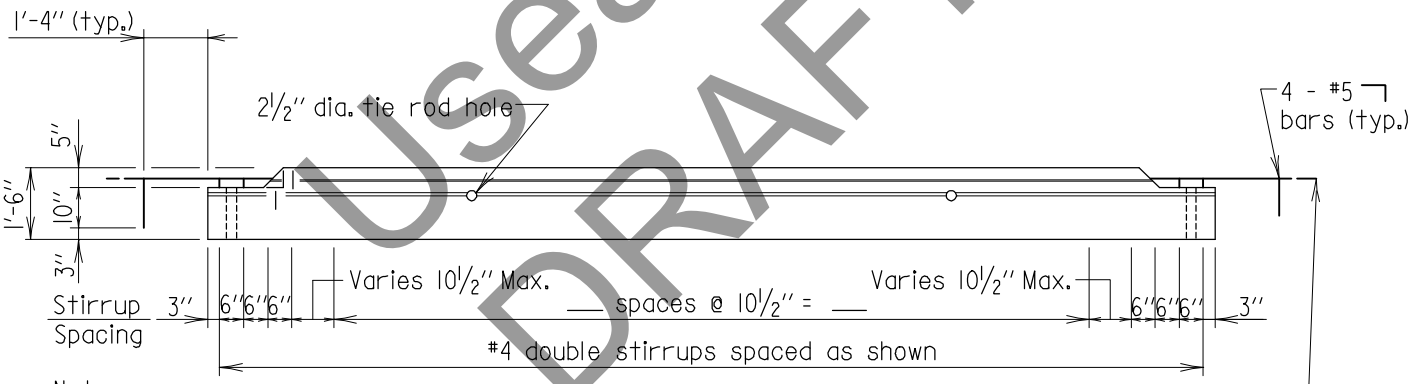

Note:
Stirrup spacing shown is for a 90° crossing. For bridges with other skew angles, see Std. No. SUP-SLAB(3FT)-103 for details of skewed ends.

3'-0" INTERIOR SLAB ELEVATION
Scale: 1/4" = 1'-0"

Notes:
1. Extreme care shall be used in locating tie rod holes during the casting operation. Contractor shall assemble the slab units for the entire bridge width at the casting plant to ensure that there is no hole misalignment prior to shipping slab units to the site. Any misalignment of the holes will be cause for rejection of the slab unit. Drilling or coring of the slabs to create new or modified cast holes is prohibited.
2. Adjust stirrup spacing as needed to avoid tie rod hole.
3. All reinforcing steel to be epoxy coated.

Useable DRAFT

* USEABLE DRAFT *

APPROVAL	
_____ DIRECTOR OFFICE OF STRUCTURES	
DATE: 09/01/15	
REVISIONS	
SHA	FHWA

FHWA APPROVAL
DATE:

STATE OF MARYLAND
DEPARTMENT OF TRANSPORTATION
STATE HIGHWAY ADMINISTRATION
OFFICE OF STRUCTURES

SIMPLE SPAN 20'-0" OR LESS
INTERIOR 3'-0" PRECAST CONCRETE SLAB PANEL
PLAN & ELEVATION

NO. SUP-SLAB(3FT)-101 SHEET 1 OF 2

SUPERSTRUCTURE SLABS

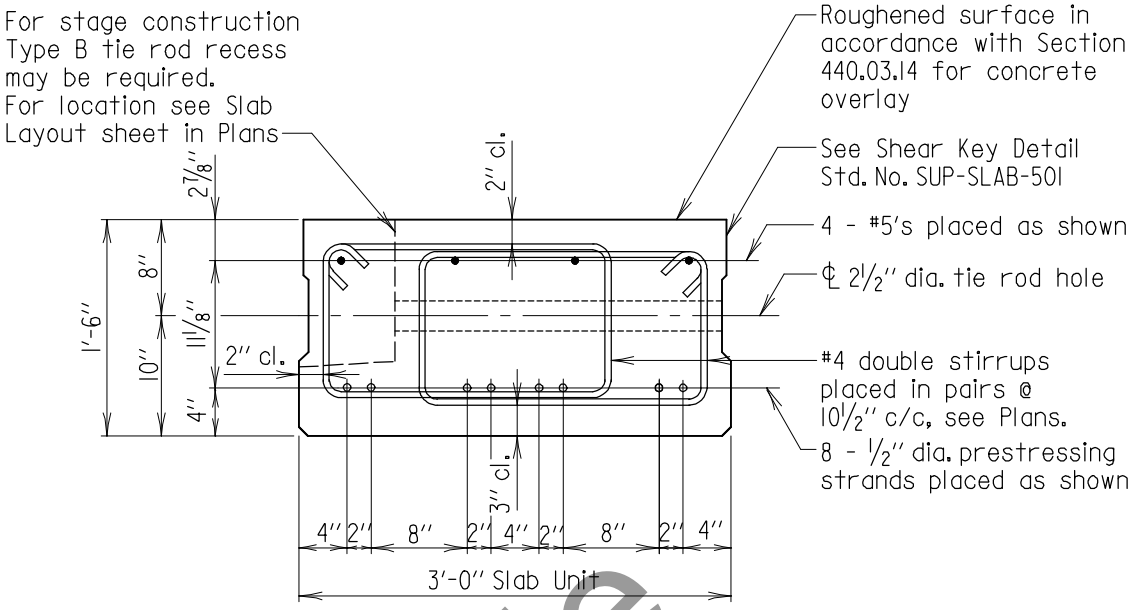

Note:
For location of tie rod holes, see contract plans.

SECTION - SLAB AT MIDSPAN
Scale: ¾" = 1'-0"

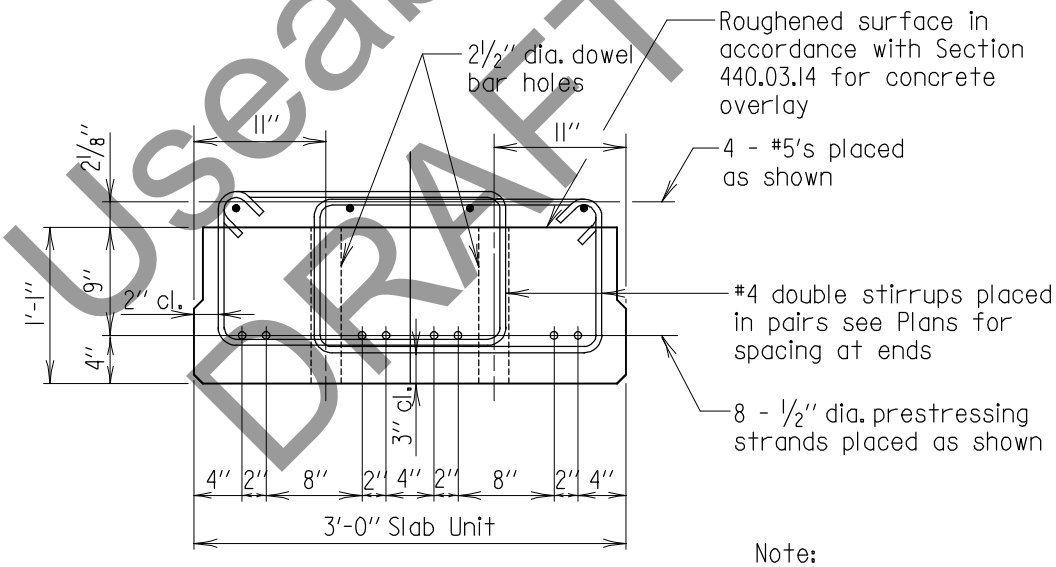

Note:
Any misplaced dowel bar holes or tie rod holes will be cause for rejection of the precast slab unit.

SECTION - SLAB AT ENDS
Scale: ¾" = 1'-0"

Useable DRAFT

* USEABLE DRAFT *

APPROVAL	
_____ DIRECTOR OFFICE OF STRUCTURES DATE: 09/01/15	
REVISIONS	
SHA	FHWA
FHWA APPROVAL	
DATE:	

STATE OF MARYLAND
DEPARTMENT OF TRANSPORTATION
STATE HIGHWAY ADMINISTRATION
OFFICE OF STRUCTURES

SIMPLE SPAN 20'-0" OR LESS
INTERIOR 3'-0" PRECAST CONCRETE SLAB PANEL SECTIONS

NO. SUP-SLAB(3FT)-101 SHEET 2 OF 2

SUPERSTRUCTURE SLABS

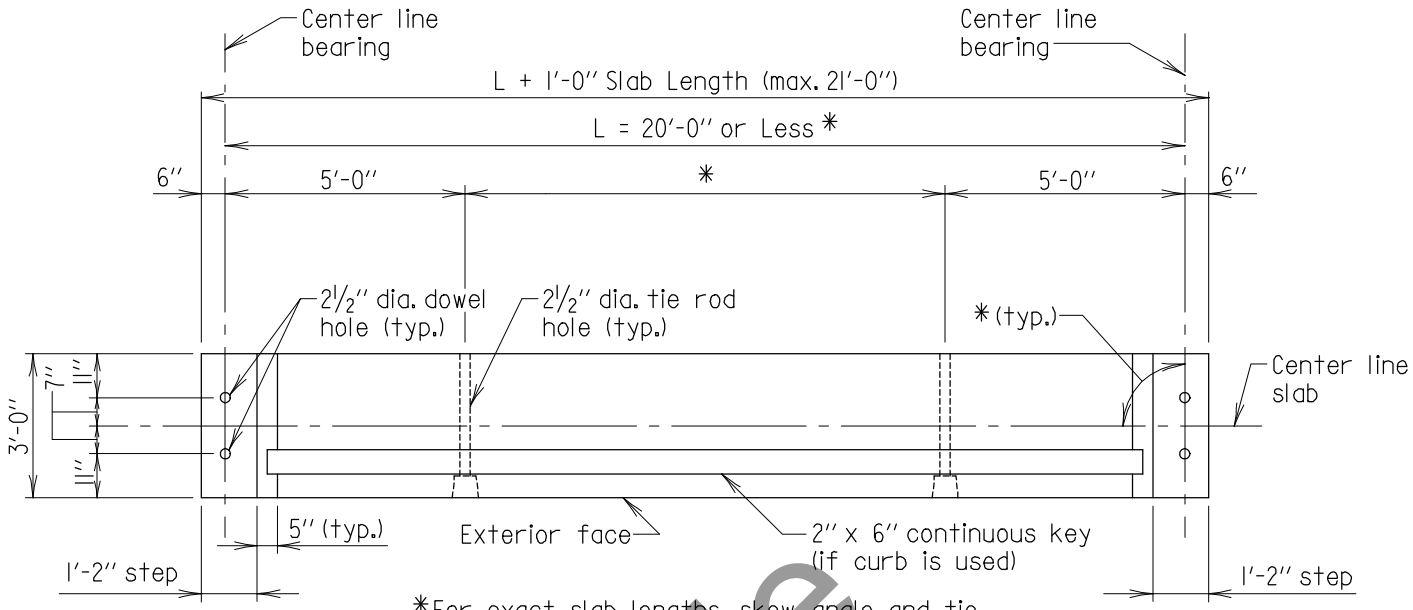

*For exact slab lengths, skew angle and tie rod pattern see contract plans' sheets.

Note:
Reinforcing steel at ends of slab and curb reinforcing not shown for clarity.

3'-0" EXTERIOR SLAB PLAN
Scale: 1/4" = 1'-0"

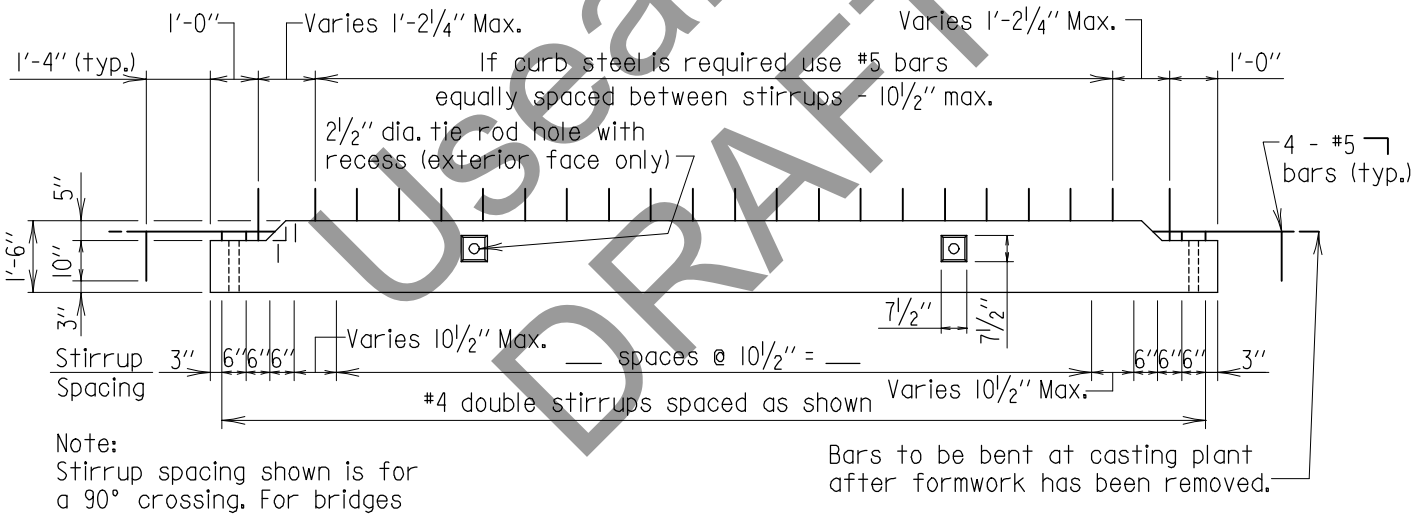

Note:
Stirrup spacing shown is for a 90° crossing. For bridges with other skew angles, see Std. No. SUP-SLAB(3FT)-103 for details of skewed ends.

3'-0" EXTERIOR SLAB ELEVATION
Scale: 1/4" = 1'-0"

Notes:
1. Extreme care shall be used in locating tie rod holes during the casting operation. Contractor shall assemble the slab units for the entire bridge width at the casting plant to ensure that there is no hole misalignment prior to shipping slab units to the site. Any misalignment of the holes will be cause for rejection of the slab unit. Drilling or coring of the slabs to create new or modified cast holes is prohibited.
2. Adjust curb rebar and stirrup spacing as needed to avoid tie rod hole and railing anchor bolts (if applicable).
3. All reinforcing steel to be epoxy coated.

Useable DRAFT

* USEABLE DRAFT *

APPROVAL	
_____ DIRECTOR OFFICE OF STRUCTURES	
DATE: 09/01/15	
REVISIONS	
SHA	FHWA

FHWA APPROVAL
DATE:

STATE OF MARYLAND
DEPARTMENT OF TRANSPORTATION
STATE HIGHWAY ADMINISTRATION
OFFICE OF STRUCTURES

SIMPLE SPAN 20'-0" OR LESS
EXTERIOR 3'-0" PRECAST CONCRETE SLAB PANEL
PLAN & ELEVATION

NO. SUP-SLAB(3FT)-102 SHEET 1 OF 2

SUPERSTRUCTURE SLABS

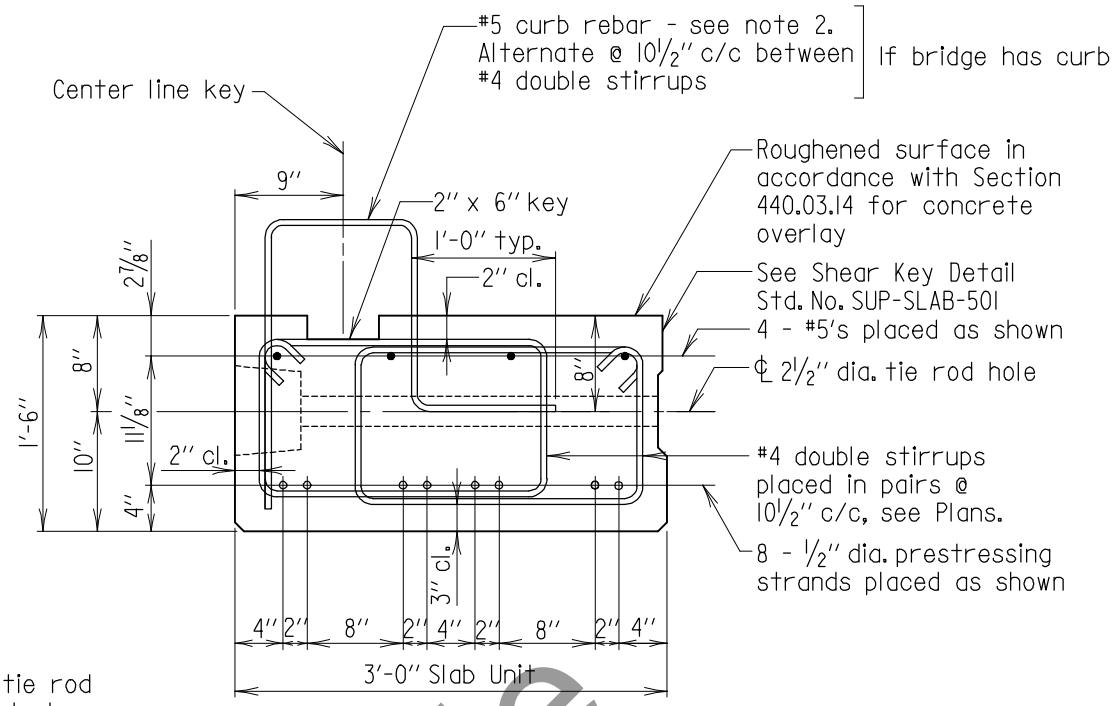

Notes:
1. For location of tie rod holes, see contract plans.

2. For location of curb reinforcement and anchor bolts and plates to be cast in slab for railing, see Std. No. SUP-TB(TR)-301

SECTION - SLAB AT MIDSPAN
Scale: ¾" = 1'-0"

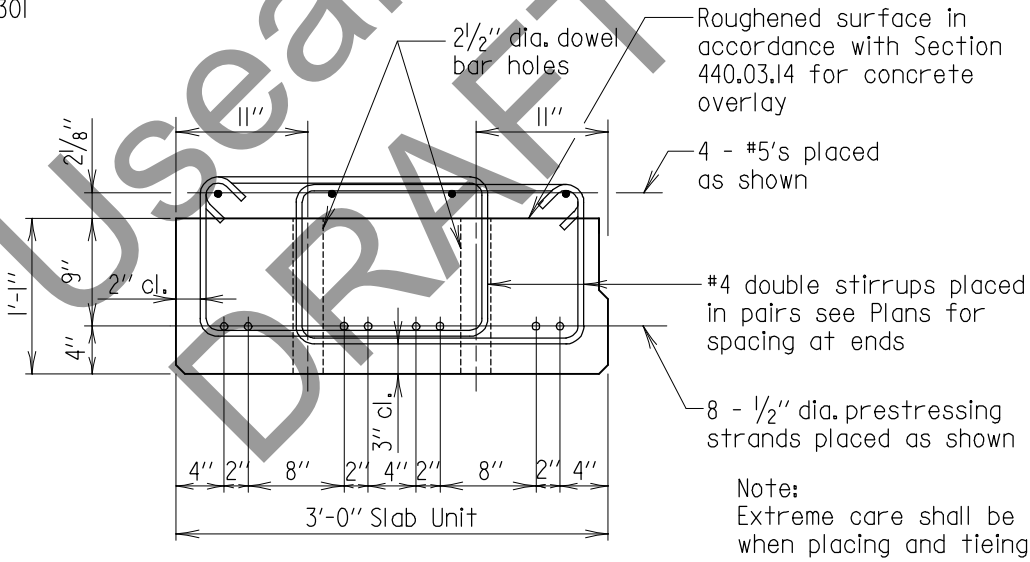

SECTION - SLAB AT ENDS
Scale: ¾" = 1'-0"

Note:
Extreme care shall be used when placing and tieing the curb rebar, railing and anchor bolts assembly to provide for the required clearances. Any misplaced rebar, dowel bar holes, tie rod holes or anchor bolts will be cause for rejection of the precast slab unit.

Useable DRAFT

* USEABLE DRAFT *

APPROVAL	
_____ DIRECTOR OFFICE OF STRUCTURES DATE: 09/01/15	
REVISIONS	
SHA	FHWA
FHWA APPROVAL	
DATE:	

STATE OF MARYLAND
DEPARTMENT OF TRANSPORTATION
STATE HIGHWAY ADMINISTRATION
OFFICE OF STRUCTURES

SIMPLE SPAN 20'-0" OR LESS
EXTERIOR 3'-0" PRECAST CONCRETE SLAB PANEL SECTIONS

NO. SUP-SLAB(3FT)-102 SHEET 2 OF 2

SUPERSTRUCTURE SLABS

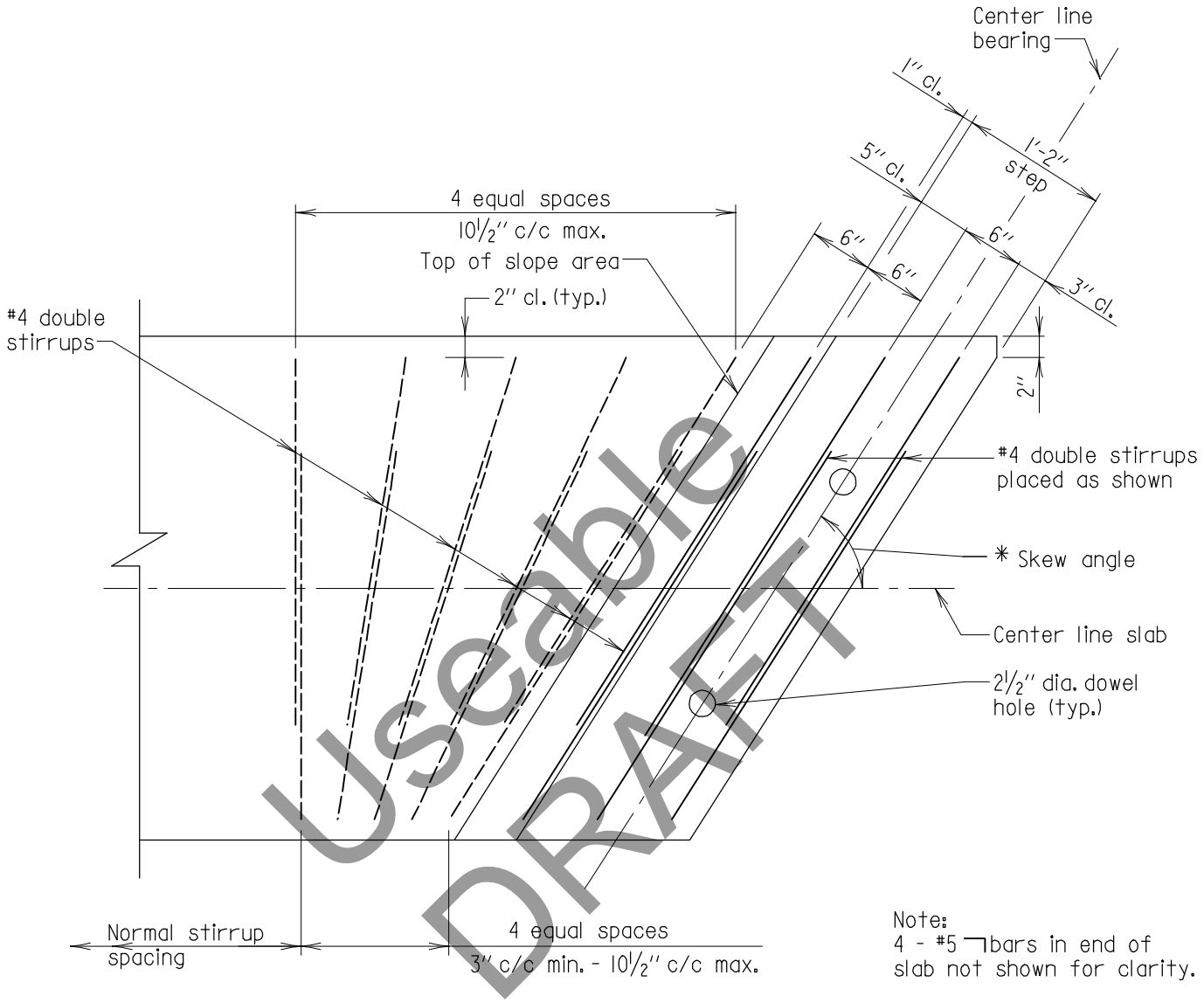

Useable DRAFT

Note:
4 - #5 ⌐bars in end of slab not shown for clarity.

*For exact skew angle, see contract plan sheets.

PLAN
Scale: ¾" = 1'-0"

Note to Fabricator:
End stirrup spacing must be laid out to determine spacing.

Note to Designer:
Layout shown works up to a skew angle of 55°. For angles less than 55° designer must layout skewed end detail on plans.

* USEABLE DRAFT *

Note:
All reinforcing steel to be epoxy coated.

APPROVAL	
_____ DIRECTOR OFFICE OF STRUCTURES DATE: 09/01/15	
REVISIONS	
SHA	FHWA
FHWA APPROVAL	
DATE:	

STATE OF MARYLAND
DEPARTMENT OF TRANSPORTATION
STATE HIGHWAY ADMINISTRATION
OFFICE OF STRUCTURES

SIMPLE SPAN 20'-0" OR LESS
INTERIOR 3'-0" PRECAST CONCRETE SLAB PANEL
SKEWED END DETAIL

NO. SUP-SLAB(3FT)-103 SHEET 1 OF 2

SUPERSTRUCTURE SLABS

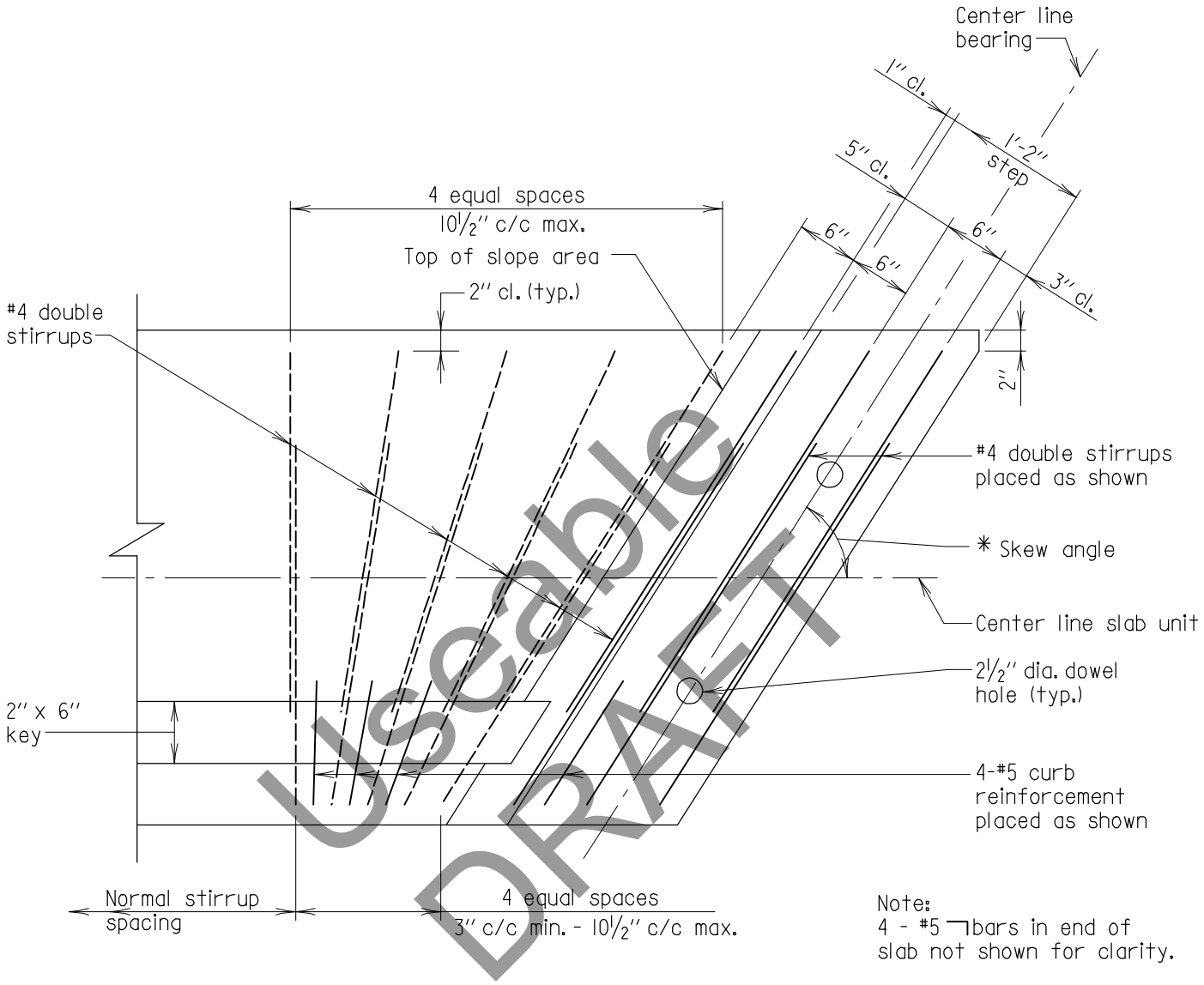

Useable DRAFT

Note:
4 - #5 ⌐bars in end of slab not shown for clarity.

*For exact skew angle, see contract plan sheets.

PLAN
Scale: ¾'' = 1'-0''

Note to Fabricator:
End stirrup spacing must be laid out to determine spacing.

Note to Designer:
Layout shown works up to a skew angle of 55°. For angles less than 55° designer must layout skewed end detail on plans.

* USEABLE DRAFT *

Note:
All reinforcing steel to be epoxy coated.

APPROVAL	
_____ DIRECTOR OFFICE OF STRUCTURES DATE: 09/01/15	
REVISIONS	
SHA	FHWA
FHWA APPROVAL	
DATE:	

STATE OF MARYLAND
DEPARTMENT OF TRANSPORTATION
STATE HIGHWAY ADMINISTRATION
OFFICE OF STRUCTURES

SIMPLE SPAN 20'-0'' OR LESS
EXTERIOR 3'-0'' PRECAST CONCRETE SLAB PANEL
SKEWED END DETAIL

NO. SUP-SLAB(3FT)-103 SHEET 2 OF 2

SUPERSTRUCTURE SLABS

Notes:

1. Extreme care shall be used in locating tie rod holes during the casting operation. Contractor shall assemble the slab units for the entire bridge width at the casting plant to ensure that there is no hole misalignment prior to shipping slab units to the site. Any misalignment of the holes will be cause for rejection of the slab unit. Drilling or coring of the slabs to create new or modified cast holes is prohibited.
2. Adjust curb rebar and stirrup spacing as needed to avoid tie rod hole and railing anchor bolts (if applicable).
3. All reinforcing steel to be epoxy coated.

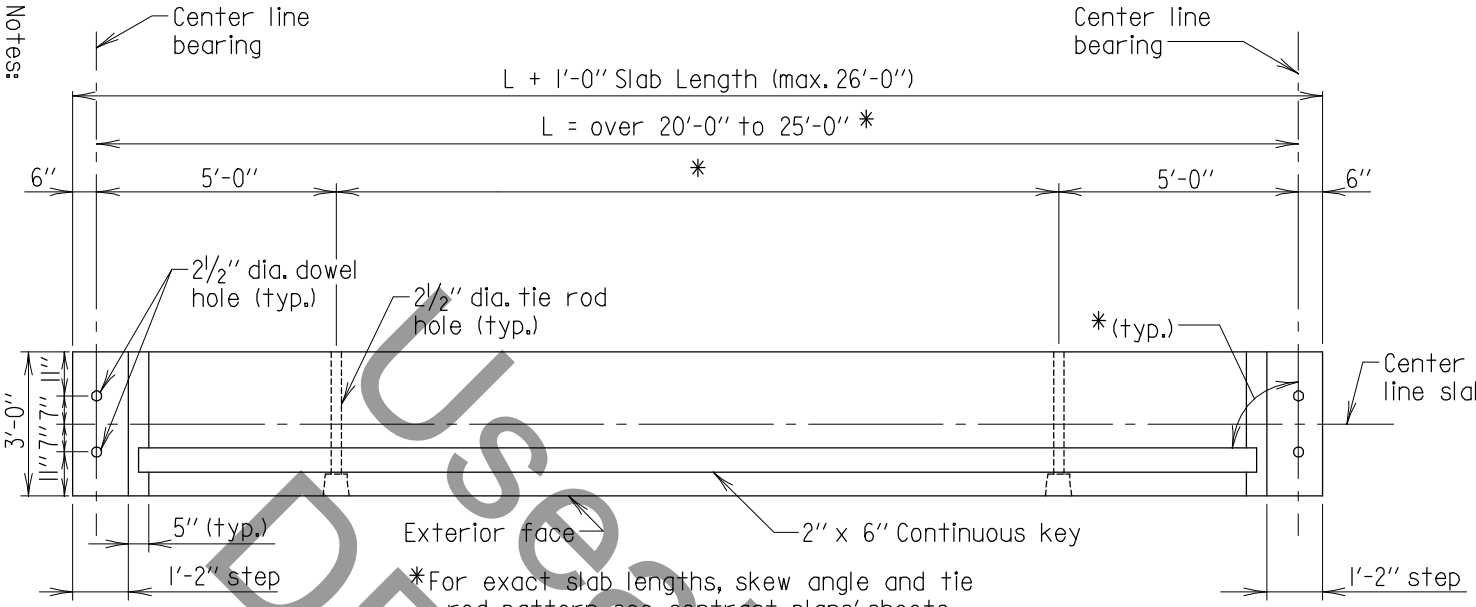

*For exact slab lengths, skew angle and tie rod pattern see contract plans' sheets.

Note:
Stirrup spacing shown is for a 90° crossing. For bridges with other skew angles, see Std. No. SUP-SLAB(3FT)-203 for details of skewed ends.

3'-0" EXTERIOR SLAB PLAN
Scale: 1/4" = 1'-0"

Note:
Reinforcing steel at ends of slab and curb reinforcing not shown for clarity.

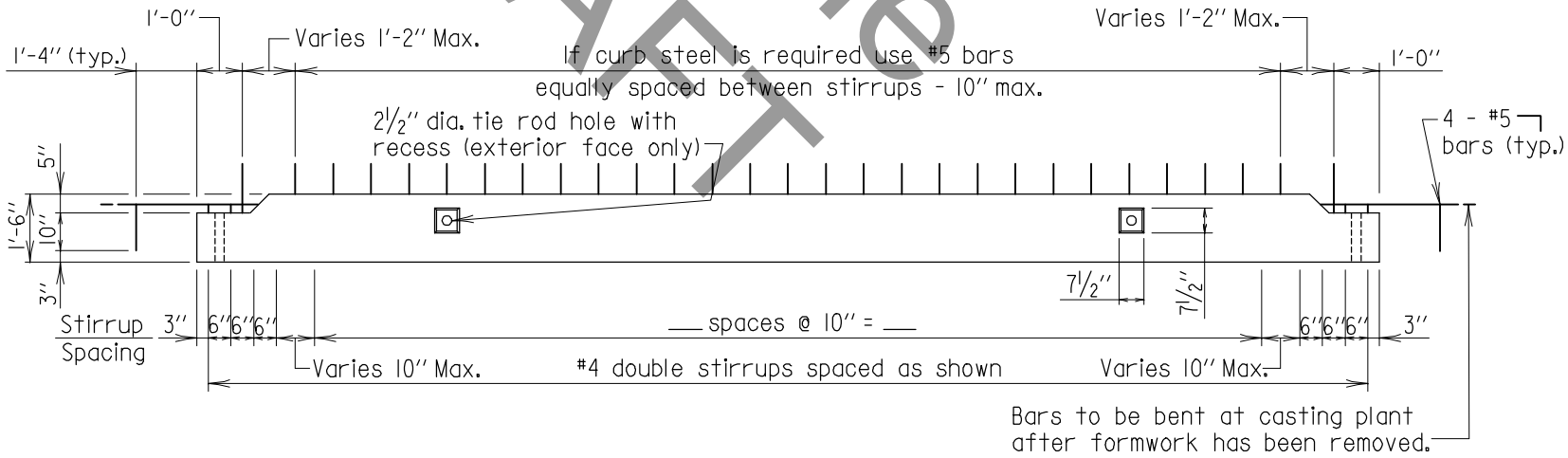

3'-0" EXTERIOR SLAB ELEVATION
Scale: 1/4" = 1'-0"

Useable DRAFT

APPROVAL	
DIRECTOR OFFICE OF STRUCTURES	
DATE: 09/01/15	
REVISIONS	
SHA	FHWA
FHWA APPROVAL	
DATE:	

STATE OF MARYLAND
DEPARTMENT OF TRANSPORTATION
STATE HIGHWAY ADMINISTRATION
OFFICE OF STRUCTURES

SIMPLE SPAN GREATER THAN 20'-0" TO 25'-0"
EXTERIOR 3'-0" PRECAST CONCRETE SLAB PANEL
PLAN & ELEVATION

NO. SUP-SLAB(3FT)-202 SHEET 1 OF 2

* USEABLE DRAFT *

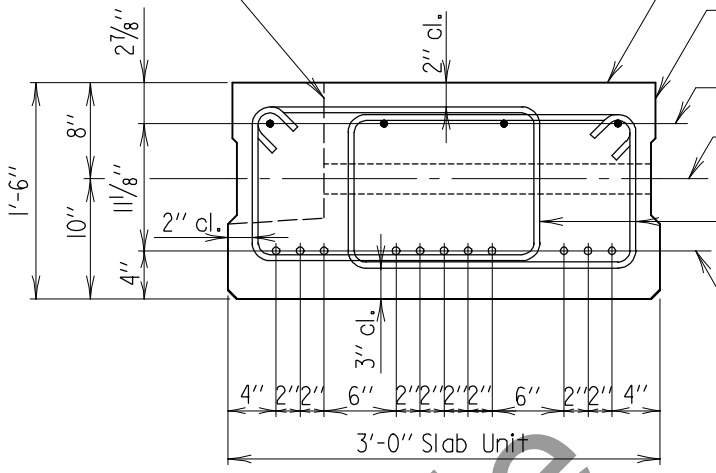

Note:
For location of tie rod holes, see contract plans.

SECTION - SLAB AT MIDSPAN
Scale: ¾" = 1'-0"

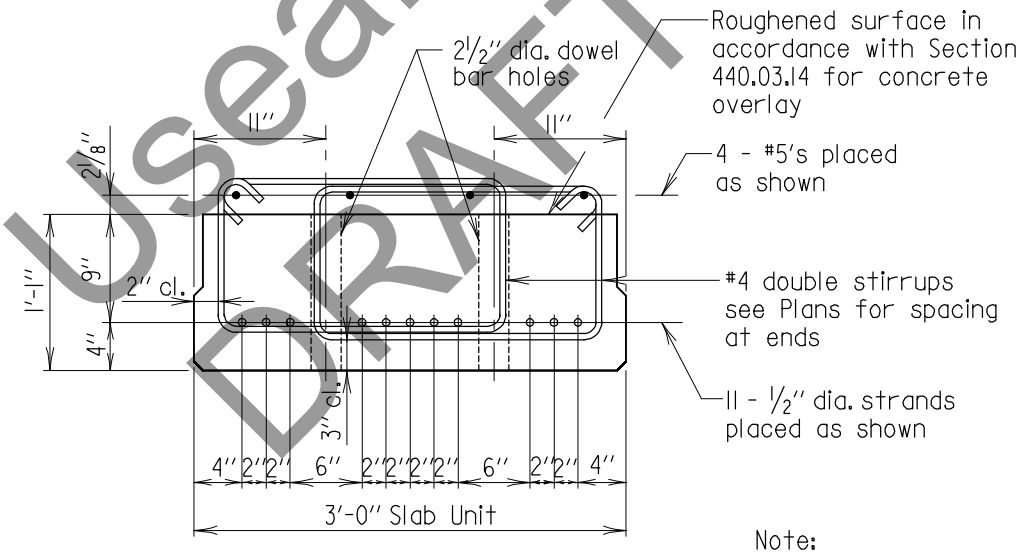

Note:
Any misplaced dowel bar holes or tie rod holes will be cause for rejection of the precast slab unit.

SECTION - SLAB AT ENDS
Scale: ¾" = 1'-0"

Useable DRAFT

* USEABLE DRAFT *

APPROVAL	
_____ DIRECTOR OFFICE OF STRUCTURES DATE: 09/01/15	
REVISIONS	
SHA	FHWA

FHWA APPROVAL
DATE:

STATE OF MARYLAND
DEPARTMENT OF TRANSPORTATION
STATE HIGHWAY ADMINISTRATION
OFFICE OF STRUCTURES

SIMPLE SPAN GREATER THAN 20'-0" TO 25'-0"
INTERIOR 3'-0" PRECAST CONCRETE SLAB PANEL
SECTIONS

NO. SUP-SLAB(3FT)-201 SHEET 2 OF 2

SUPERSTRUCTURE SLABS

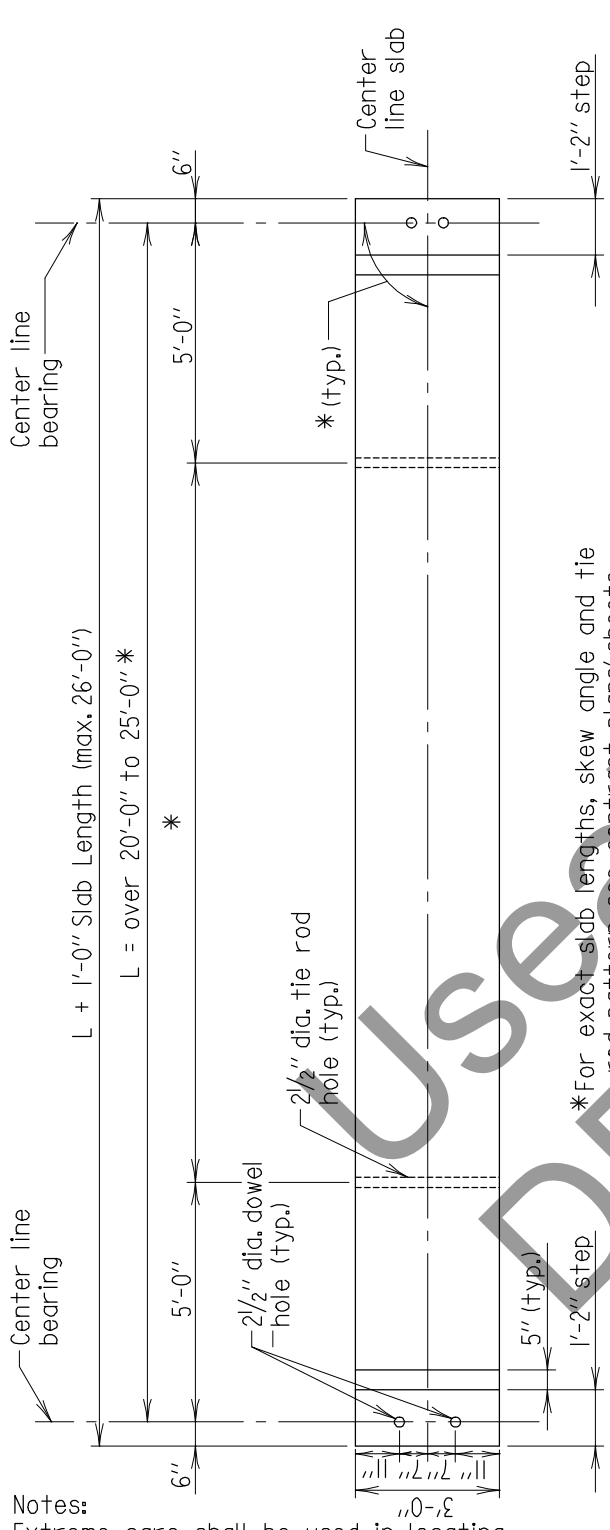

*For exact slab lengths, skew angle and tie rod pattern see contract plans' sheets.

3'-0" INTERIOR SLAB PLAN
Scale: 1/4" = 1'-0"

Note:
Stirrup spacing shown is for a 90° crossing. For bridges with other skew angles, see Std. No. SUP-SLAB(3FT)-203 for details of skewed ends.

Note:
Reinforcing steel at ends of slab not shown for clarity.

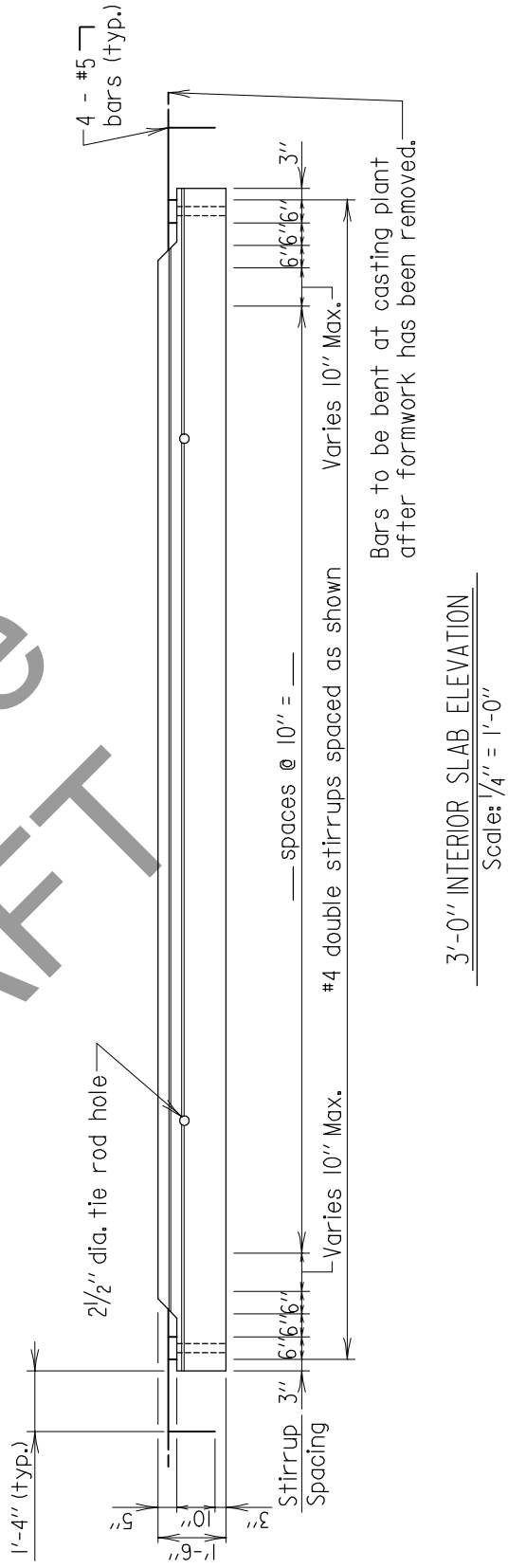

3'-0" INTERIOR SLAB ELEVATION
Scale: 1/4" = 1'-0"

Notes:

1. Extreme care shall be used in locating tie rod holes during the casting operation. Contractor shall assemble the slab units for the entire bridge width at the casting plant to ensure that there is no hole misalignment prior to shipping slab units to the site. Any misalignment of the holes will be cause for rejection of the slab unit. Drilling or coring of the slabs to create new or modified cast holes is prohibited.
2. Adjust curb rebar and stirrup spacing as needed to avoid tie rod hole and railing anchor bolts (if applicable).
3. All reinforcing steel to be epoxy coated.

Useable DRAFT

* USEABLE DRAFT *

APPROVAL	
_____ DIRECTOR OFFICE OF STRUCTURES	
DATE: 09/01/15	
REVISIONS	
SHA	FHWA

FHWA APPROVAL
DATE:

STATE OF MARYLAND
DEPARTMENT OF TRANSPORTATION
STATE HIGHWAY ADMINISTRATION
OFFICE OF STRUCTURES

SIMPLE SPAN GREATER THAN 20'-0" TO 25'-0"
INTERIOR 3'-0" PRECAST CONCRETE SLAB PANEL
PLAN & ELEVATION

NO. SUP-SLAB(3FT)-201 SHEET 1 OF 2

SUPERSTRUCTURE SLABS

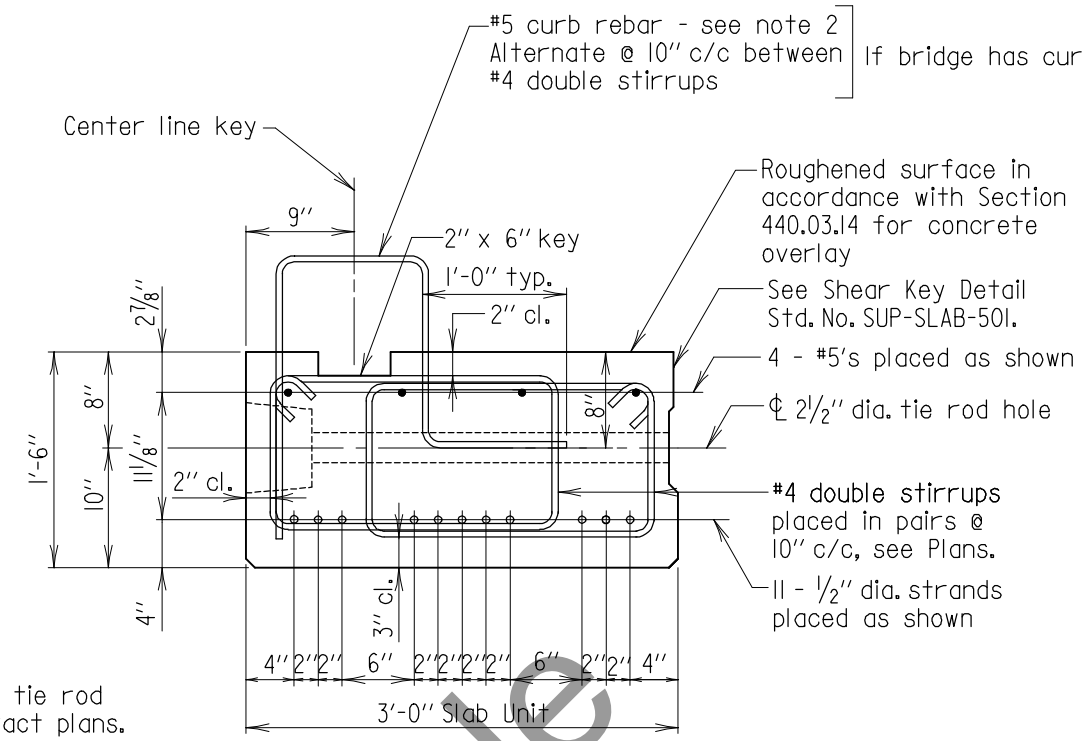

Notes:

1. For location of tie rod holes, see contract plans.

2. For location of curb reinforcement and anchor bolts and plates to be cast in slab for railing, see Std. No. SUP-TB(TR)-301

SECTION - SLAB AT MIDSPAN

Scale: ¾" = 1'-0"

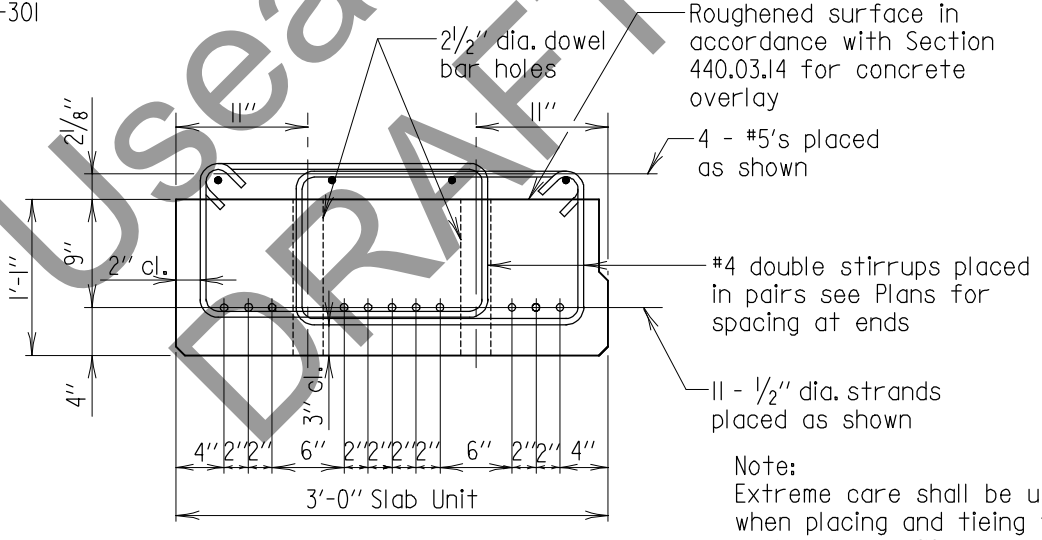

SECTION - SLAB AT ENDS

Scale: ¾" = 1'-0"

Note:
Extreme care shall be used when placing and tieing the curb rebar, railing and anchor bolts assembly to provide for the required clearances. Any misplaced rebar, dowel bar holes, tie rod holes or anchor bolts will be cause for rejection of the precast slab unit.

Useable DRAFT

* USEABLE DRAFT *

APPROVAL	
_____ DIRECTOR OFFICE OF BRIDGE DEVEL. DATE: 09/01/15	
REVISIONS	
SHA	FHWA

FHWA APPROVAL
DATE:

STATE OF MARYLAND
DEPARTMENT OF TRANSPORTATION
STATE HIGHWAY ADMINISTRATION
OFFICE OF STRUCTURES

SIMPLE SPAN GREATER THAN 20'-0" TO 25'-0"
EXTERIOR 3'-0" PRECAST CONCRETE SLAB PANEL SECTIONS

NO. SUP-SLAB(3FT)-202 SHEET 2 OF 2

SUPERSTRUCTURE SLABS

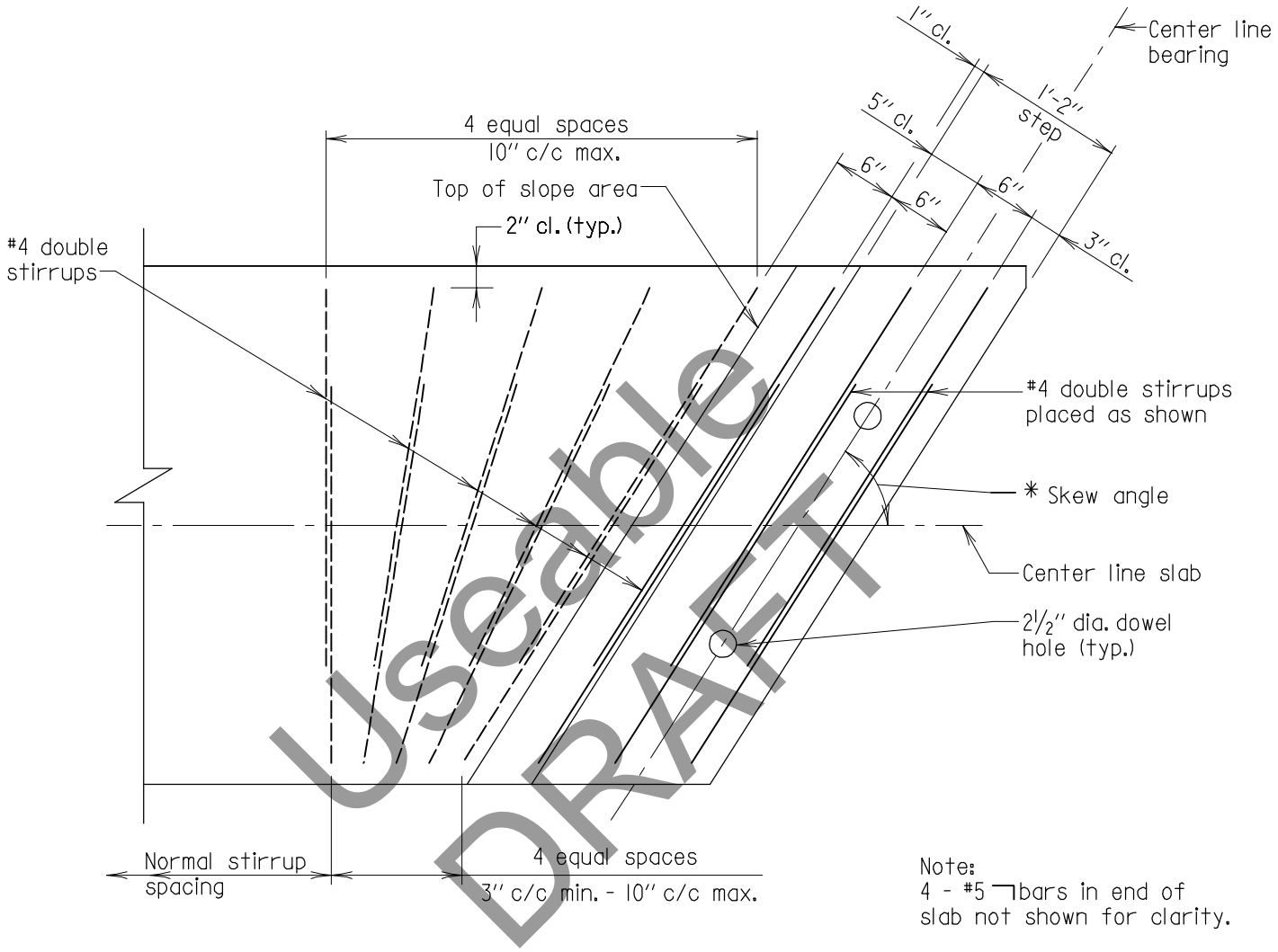

Useable DRAFT

Note:
4 - #5 ⌐bars in end of slab not shown for clarity.

*For exact skew angle, see contract plan sheets.

PLAN
Scale: 3/4'' = 1'-0''

Note to Fabricator:
End stirrup spacing must be laid out to determine spacing.

Note to Designer:
Layout shown works up to a skew angle of 55°. For angles less than 55° designer must layout skewed end detail on plans.

* USEABLE DRAFT *

Note:
All reinforcing steel to be epoxy coated.

APPROVAL	
_____ DIRECTOR OFFICE OF STRUCTURES DATE: 09/01/15	
REVISIONS	
SHA	FHWA

FHWA APPROVAL
DATE:

STATE OF MARYLAND
DEPARTMENT OF TRANSPORTATION
STATE HIGHWAY ADMINISTRATION
OFFICE OF STRUCTURES

SIMPLE SPAN GREATER THAN 20'-0'' TO 25'-0''
INTERIOR 3'-0'' PRECAST CONCRETE SLAB PANEL
SKEWED END DETAIL

NO. SUP-SLAB(3FT)-203 SHEET 1 OF 2

SUPERSTRUCTURE SLABS

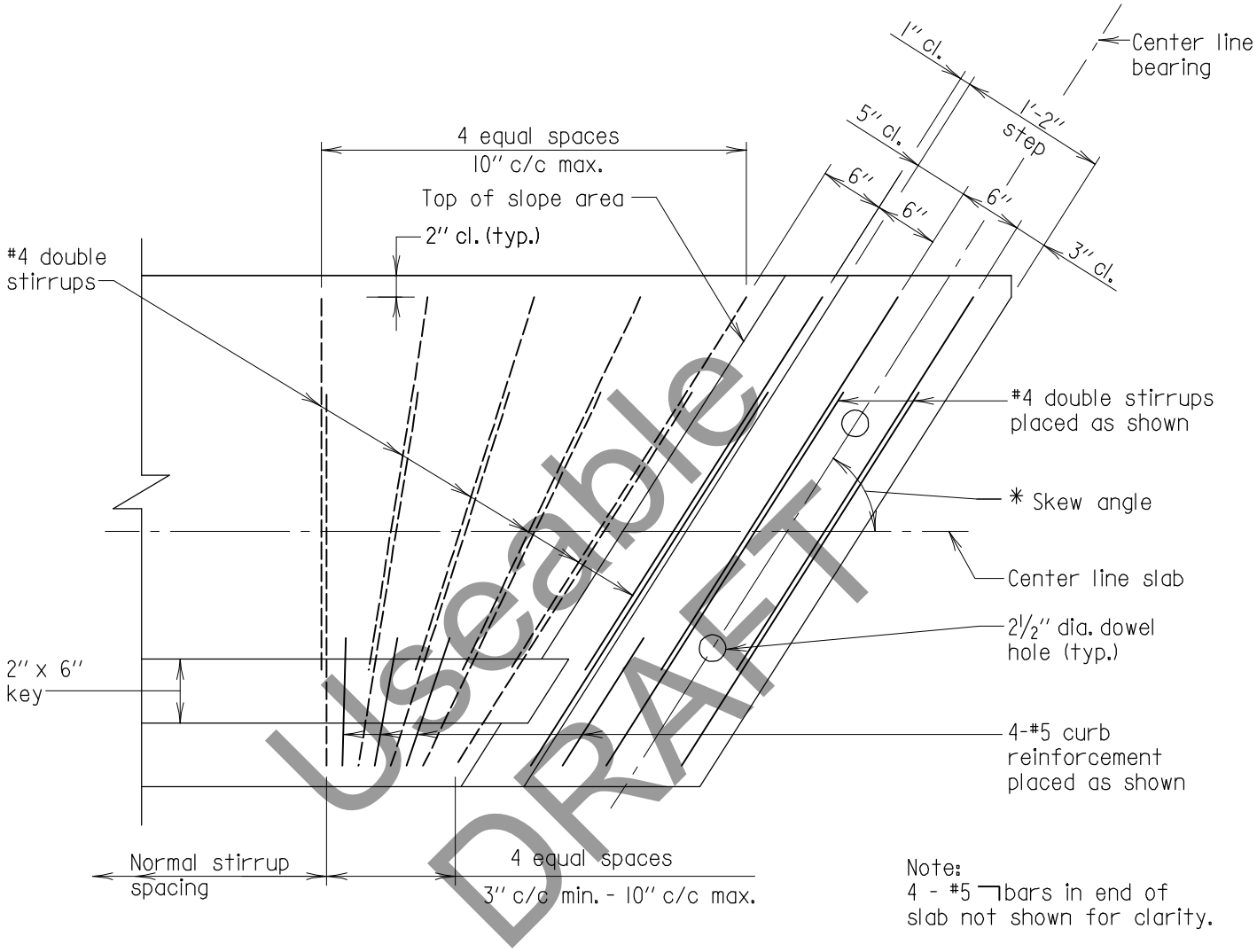

Useable DRAFT

Note:
4 - #5 ⌐bars in end of slab not shown for clarity.

*For exact skew angle, see contract plan sheets.

PLAN
Scale: 3/4'' = 1'-0''

Note to Fabricator:
End stirrup spacing must be laid out to determine spacing.

Note to Designer:
Layout shown works up to a skew angle of 55°. For angles less than 55° designer must layout skewed end detail on plans.

* USEABLE DRAFT *

Note:
All reinforcing steel to be epoxy coated.

APPROVAL	
_____ DIRECTOR OFFICE OF STRUCTURES DATE: 09/01/15	
REVISIONS	
SHA	FHWA

FHWA APPROVAL
DATE:

STATE OF MARYLAND
DEPARTMENT OF TRANSPORTATION
STATE HIGHWAY ADMINISTRATION
OFFICE OF STRUCTURES

SIMPLE SPAN GREATER THAN 20'-0'' TO 25'-0''
EXTERIOR 3'-0'' PRECAST CONCRETE SLAB PANEL
SKEWED END DETAIL

NO. SUP-SLAB(3FT)-203 SHEET 2 OF 2

SUPERSTRUCTURE SLABS

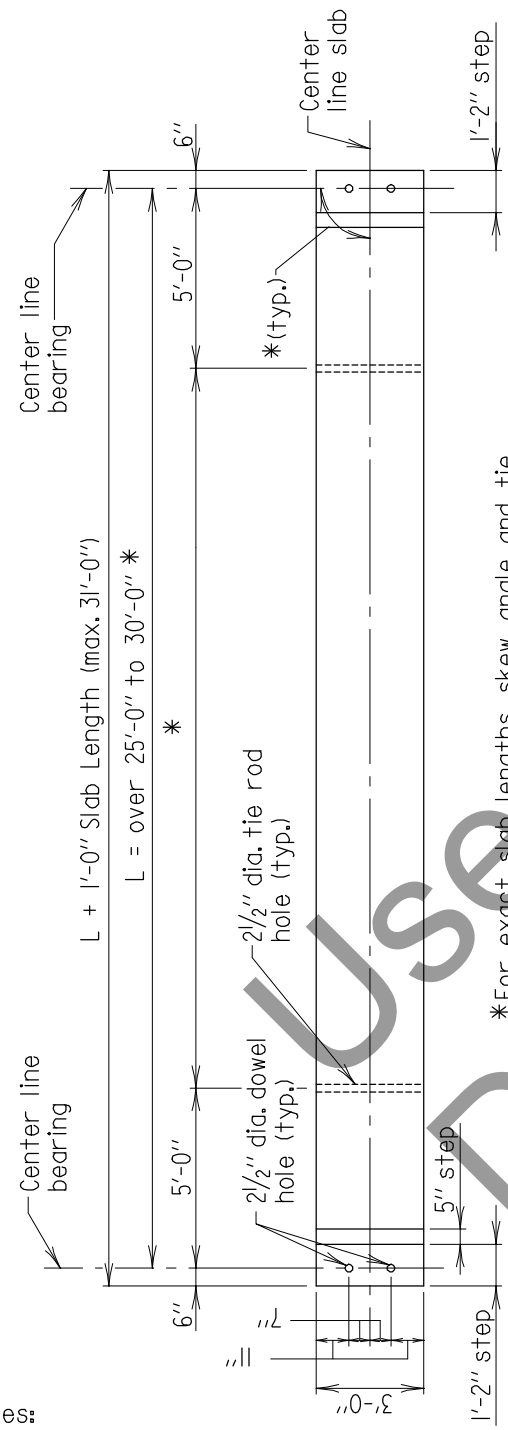

*For exact slab lengths, skew angle and tie rod pattern see contract plans' sheets.

3'-0" INTERIOR SLAB PLAN
Scale: 3/16" = 1'-0"

Note:
Stirrup spacing shown is for a 90° crossing. For bridges with other skew angles, see Std. No. SUP-SLAB(3FT)-303 for details of skewed ends.

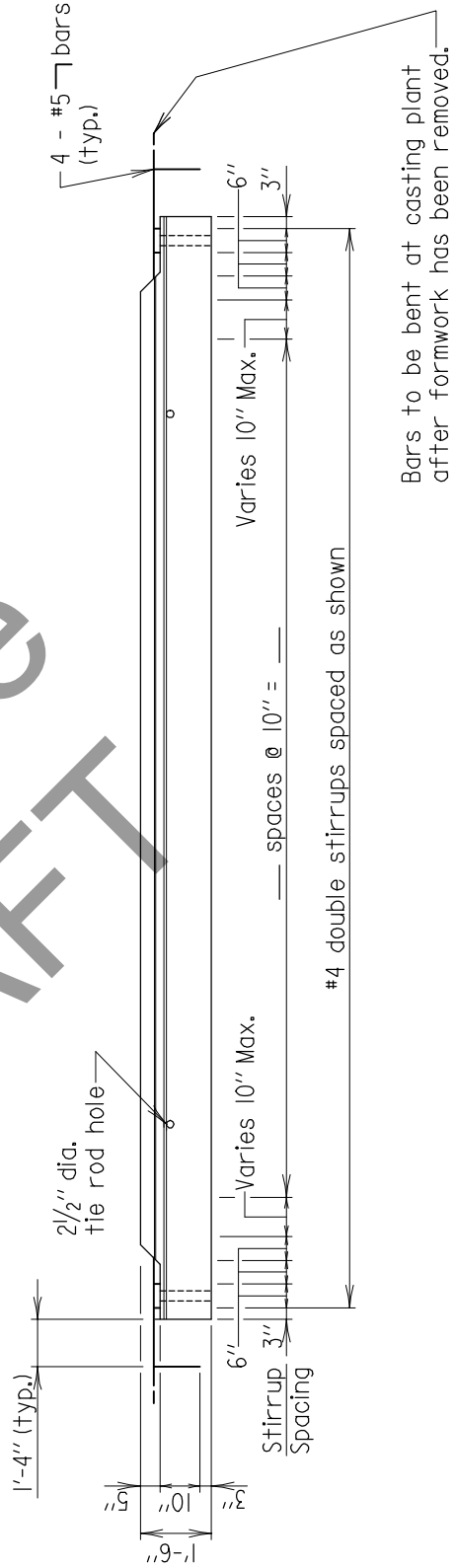

Note:
Reinforcing steel at ends of slab not shown for clarity.

3'-0" INTERIOR SLAB ELEVATION
Scale: 1/4" = 1'-0"

Notes:

1. Extreme care shall be used in locating tie rod holes during the casting operation. Contractor shall assemble the slab units for the entire bridge width at the casting plant to ensure that there is no hole misalignment prior to shipping slab units to the site. Any misalignment of the holes will be cause for rejection of the slab unit. Drilling or coring of the slabs to create new or modified cast holes is prohibited.
2. Adjust curb rebar and stirrup spacing as needed to avoid tie rod hole and railing anchor bolts (if applicable).
3. All reinforcing steel to be epoxy coated.

Useable DRAFT

* USEABLE DRAFT *

APPROVAL	
_____ DIRECTOR OFFICE OF STRUCTURES	
DATE: 09/01/15	
REVISIONS	
SHA	FHWA
FHWA APPROVAL	
DATE:	

STATE OF MARYLAND
DEPARTMENT OF TRANSPORTATION
STATE HIGHWAY ADMINISTRATION
OFFICE OF STRUCTURES

SIMPLE SPAN GREATER THAN 25'-0" TO 30'-0"
INTERIOR 3'-0" PRECAST CONCRETE SLAB PANEL
PLAN & ELEVATION

NO. SUP-SLAB(3FT)-301 SHEET 1 OF 2

SUPERSTRUCTURE SLABS

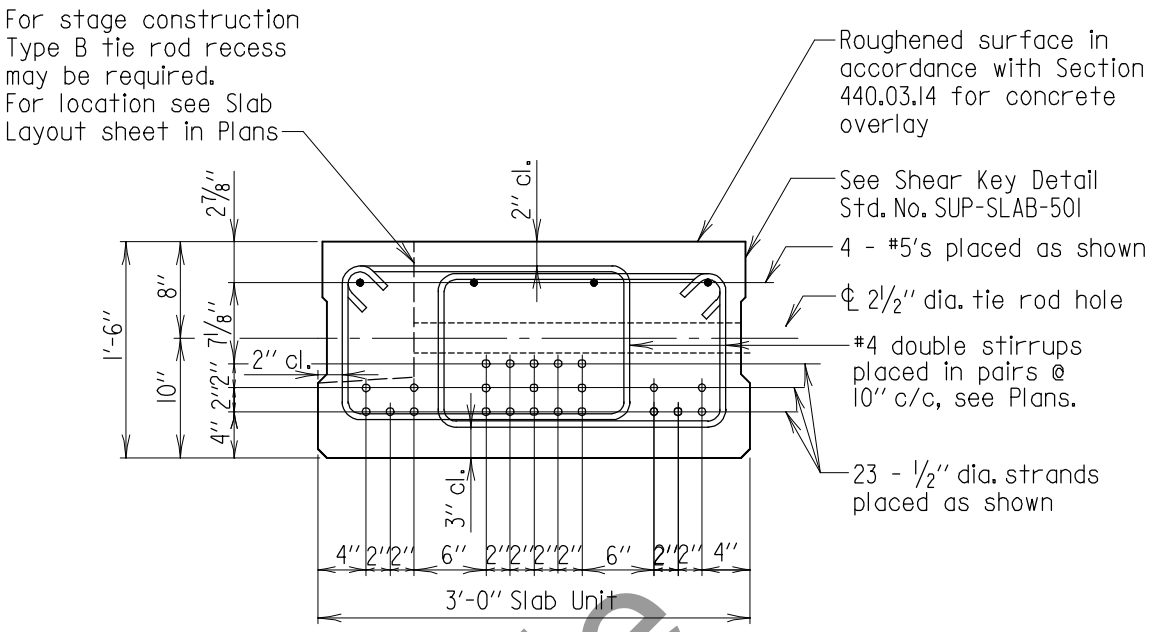

Note:
For location of tie rod holes, see contract plans.

SECTION - SLAB AT MIDSPAN
Scale: ¾" = 1'-0"

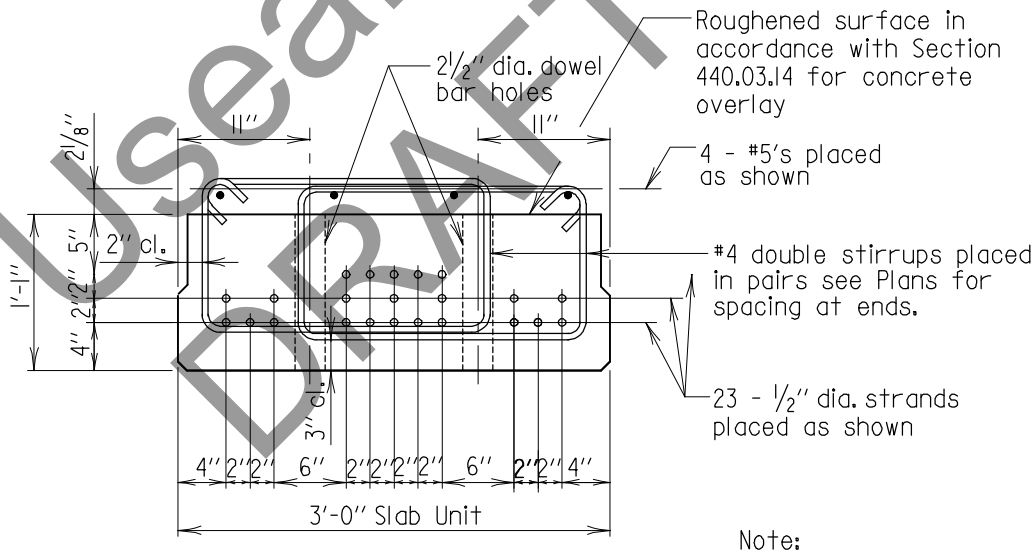

Note:
Any misplaced dowel bar holes or tie rod holes will be cause for rejection of the precast slab unit.

SECTION - SLAB AT ENDS
Scale: ¾" = 1'-0"

Useable DRAFT

Notes:
1. All reinforcing steel to be epoxy coated.
2. Adjust stirrup spacing to avoid tie rod holes as needed.

* USEABLE DRAFT *

APPROVAL	
_____ DIRECTOR OFFICE OF STRUCTURES DATE: 09/01/15	
REVISIONS	
SHA	FHWA
FHWA APPROVAL	
DATE:	

STATE OF MARYLAND
DEPARTMENT OF TRANSPORTATION
STATE HIGHWAY ADMINISTRATION
OFFICE OF STRUCTURES

SIMPLE SPAN GREATER THAN 25'-0" TO 30'-0"
INTERIOR 3'-0" PRECAST CONCRETE SLAB PANEL
SECTIONS

NO. SUP-SLAB(3FT)-301 SHEET 2 OF 2

SUPERSTRUCTURE SLABS

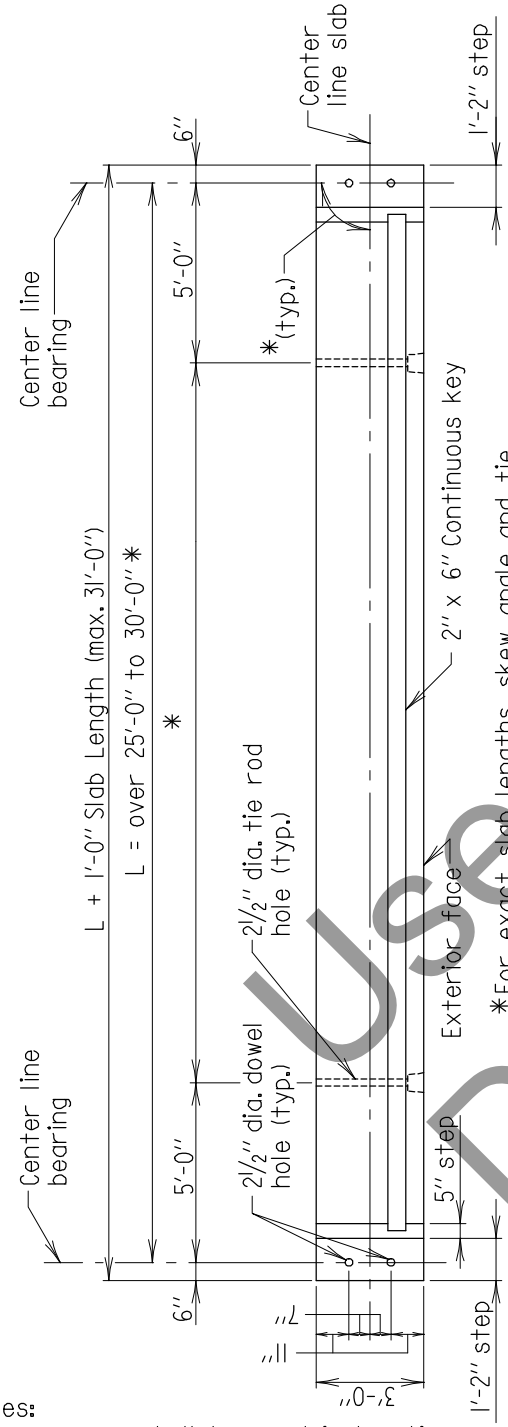

3'-0" EXTERIOR SLAB PLAN
Scale: 3/16" = 1'-0"

*For exact slab lengths, skew angle and tie rod pattern see contract plans' sheets.

Note:
Reinforcing steel at ends of slab and curb reinforcing not shown for clarity.

Note:
Stirrup spacing shown is for a 90° crossing. For bridges with other skew angles, see Std. No. SUP-SLAB(3FT)-303 for details of skewed ends.

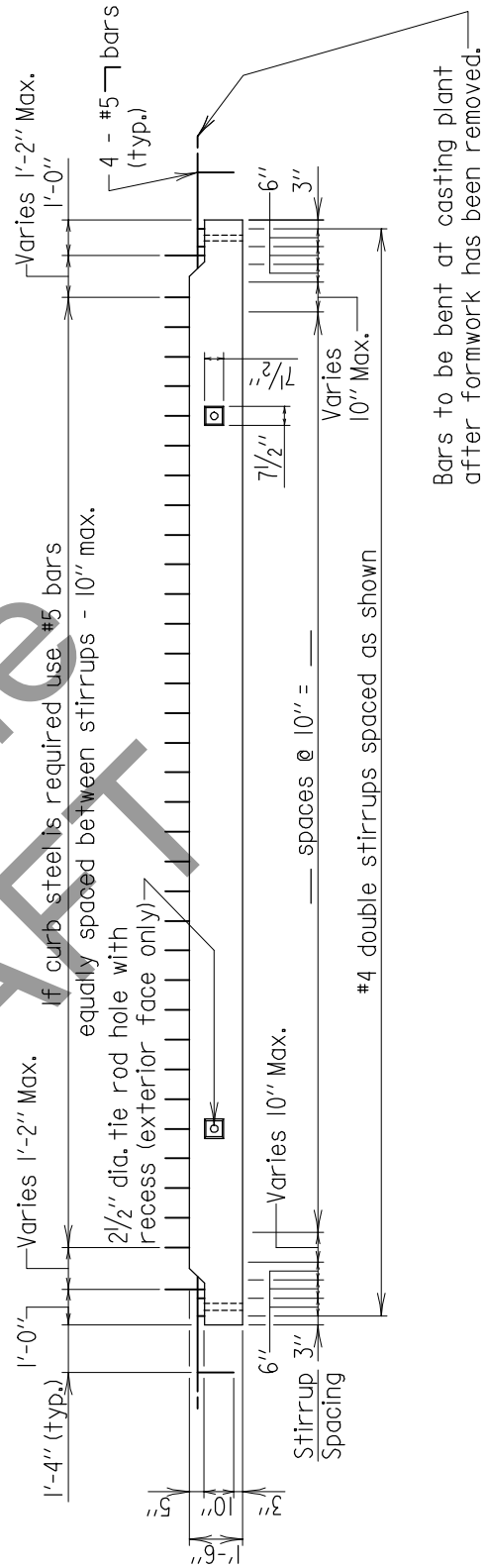

3'-0" EXTERIOR SLAB ELEVATION
Scale: 3/16" = 1'-0"

Notes:

1. Extreme care shall be used in locating tie rod holes during the casting operation. Contractor shall assemble the slab units for the entire bridge width at the casting plant to ensure that there is no hole misalignment prior to shipping slab units to the site. Any misalignment of the holes will be cause for rejection of the slab unit. Drilling or coring of the slabs to create new or modified cast holes is prohibited.
2. Adjust curb rebar and stirrup spacing as needed to avoid tie rod hole and railing anchor bolts (if applicable).
3. All reinforcing steel to be epoxy coated.

Useable DRAFT

* USEABLE DRAFT *

APPROVAL	
_____ DIRECTOR OFFICE OF STRUCTURES	
DATE: 09/01/15	
REVISIONS	
SHA	FHWA

FHWA APPROVAL
DATE:

STATE OF MARYLAND
DEPARTMENT OF TRANSPORTATION
STATE HIGHWAY ADMINISTRATION
OFFICE OF STRUCTURES

SIMPLE SPAN GREATER THAN 25'-0" TO 30'-0"
EXTERIOR 3'-0" PRECAST CONCRETE SLAB PANEL
PLAN & ELEVATION

NO. SUP-SLAB(3FT)-302 SHEET 1 OF 2

SUPERSTRUCTURE SLABS

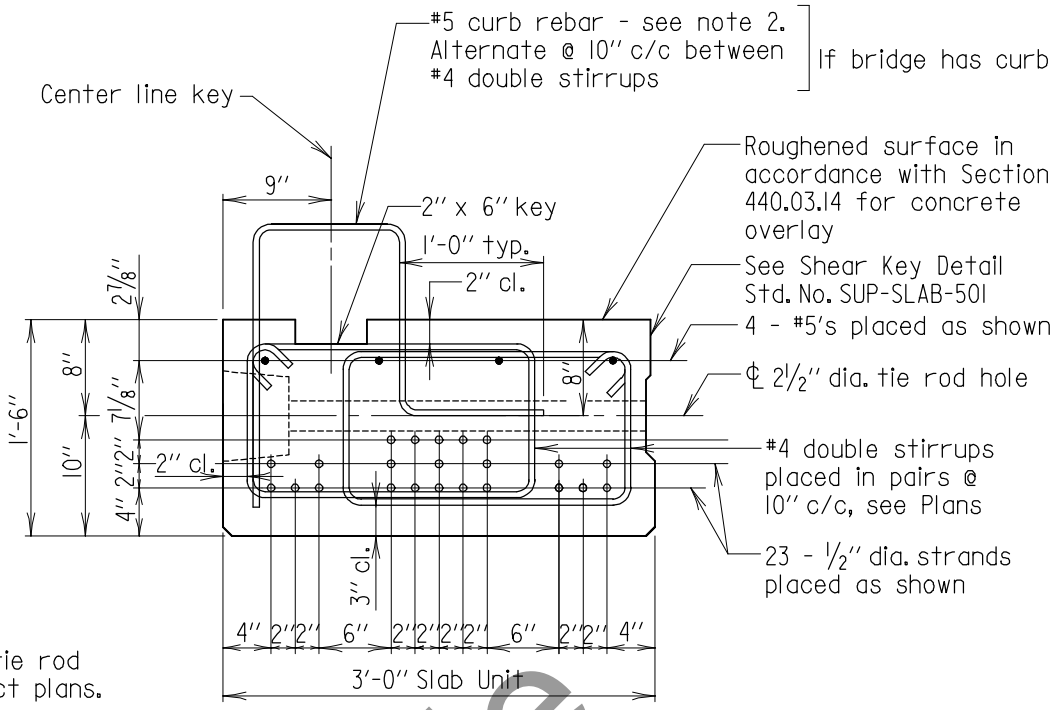

Notes:

1. For location of tie rod holes, see contract plans.

2. For location of curb reinforcement and anchor bolts and plates to be cast in slab for railing, see Std. No. SUP-TB(TR)-301

SECTION - SLAB AT MIDSPAN

Scale: ¾" = 1'-0"

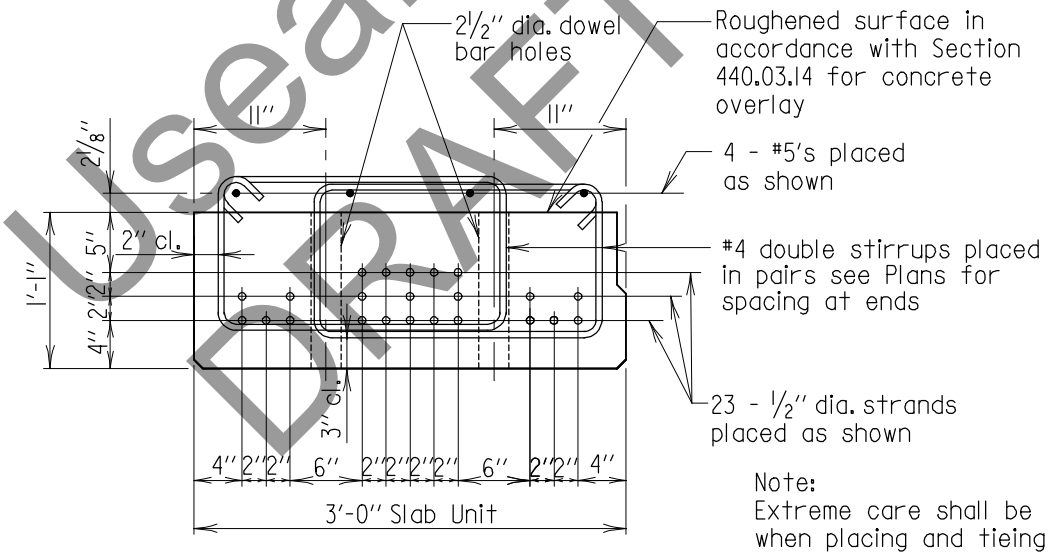

SECTION - SLAB AT ENDS

Scale: ¾" = 1'-0"

Note:
Extreme care shall be used when placing and tieing the curb rebar, railing and anchor bolts assembly to provide for the required clearances. Any misplaced rebar, dowel bar holes, tie rod holes or anchor bolts will be cause for rejection of the precast slab unit.

Useable DRAFT

* USEABLE DRAFT *

APPROVAL	
_____ DIRECTOR OFFICE OF STRUCTURES	
DATE: 09/01/15	
REVISIONS	
SHA	FHWA
FHWA APPROVAL	
DATE:	

STATE OF MARYLAND
DEPARTMENT OF TRANSPORTATION
STATE HIGHWAY ADMINISTRATION
OFFICE OF STRUCTURES

SIMPLE SPAN GREATER THAN 25'-0" TO 30'-0"
EXTERIOR 3'-0" PRECAST CONCRETE SLAB PANEL SECTIONS

NO. SUP-SLAB(3FT)-302 SHEET 2 OF 2

SUPERSTRUCTURE SLABS

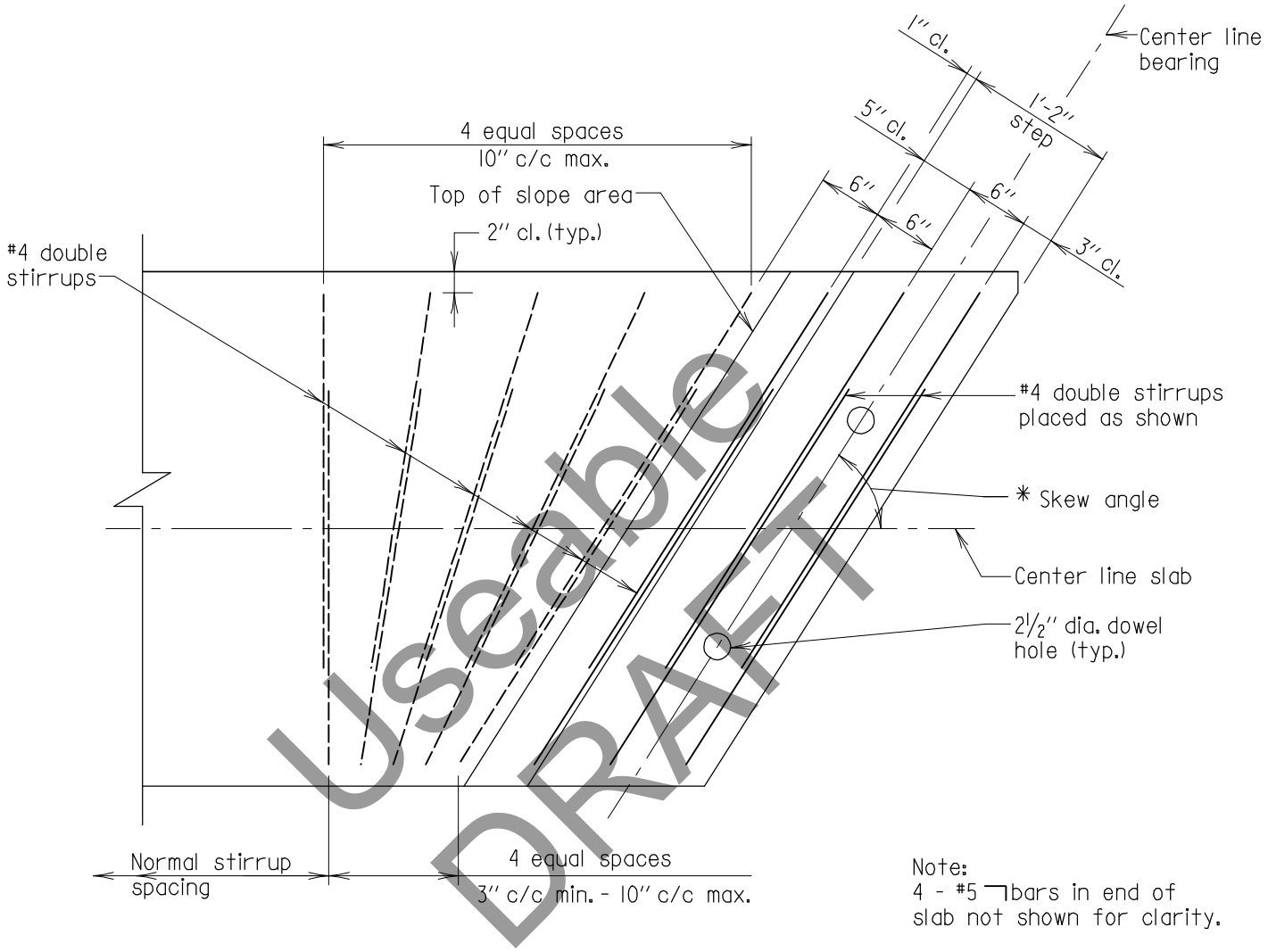

Useable DRAFT

Note:
4 - #5 ⌐ bars in end of slab not shown for clarity.

*For exact skew angle, see contract plan sheets.

PLAN
Scale: 3/4'' = 1'-0''

Note to Fabricator:
End stirrup spacing must be laid out to determine spacing.

Note to Designer:
Layout shown works up to a skew angle of 55°. For angles less than 55° designer must layout skewed end detail on plans.

* USEABLE DRAFT *

Note:
All reinforcing steel to be epoxy coated.

APPROVAL	
_____ DIRECTOR OFFICE OF STRUCTURES DATE: 09/01/15	
REVISIONS	
SHA	FHWA
FHWA APPROVAL	
DATE:	

STATE OF MARYLAND
DEPARTMENT OF TRANSPORTATION
STATE HIGHWAY ADMINISTRATION
OFFICE OF STRUCTURES

SIMPLE SPAN GREATER THAN 25'-0'' TO 30'-0''
INTERIOR 3'-0'' PRECAST CONCRETE SLAB PANEL
SKEWED END DETAIL

NO. SUP-SLAB(3FT)-303 SHEET 1 OF 2

SUPERSTRUCTURE SLABS

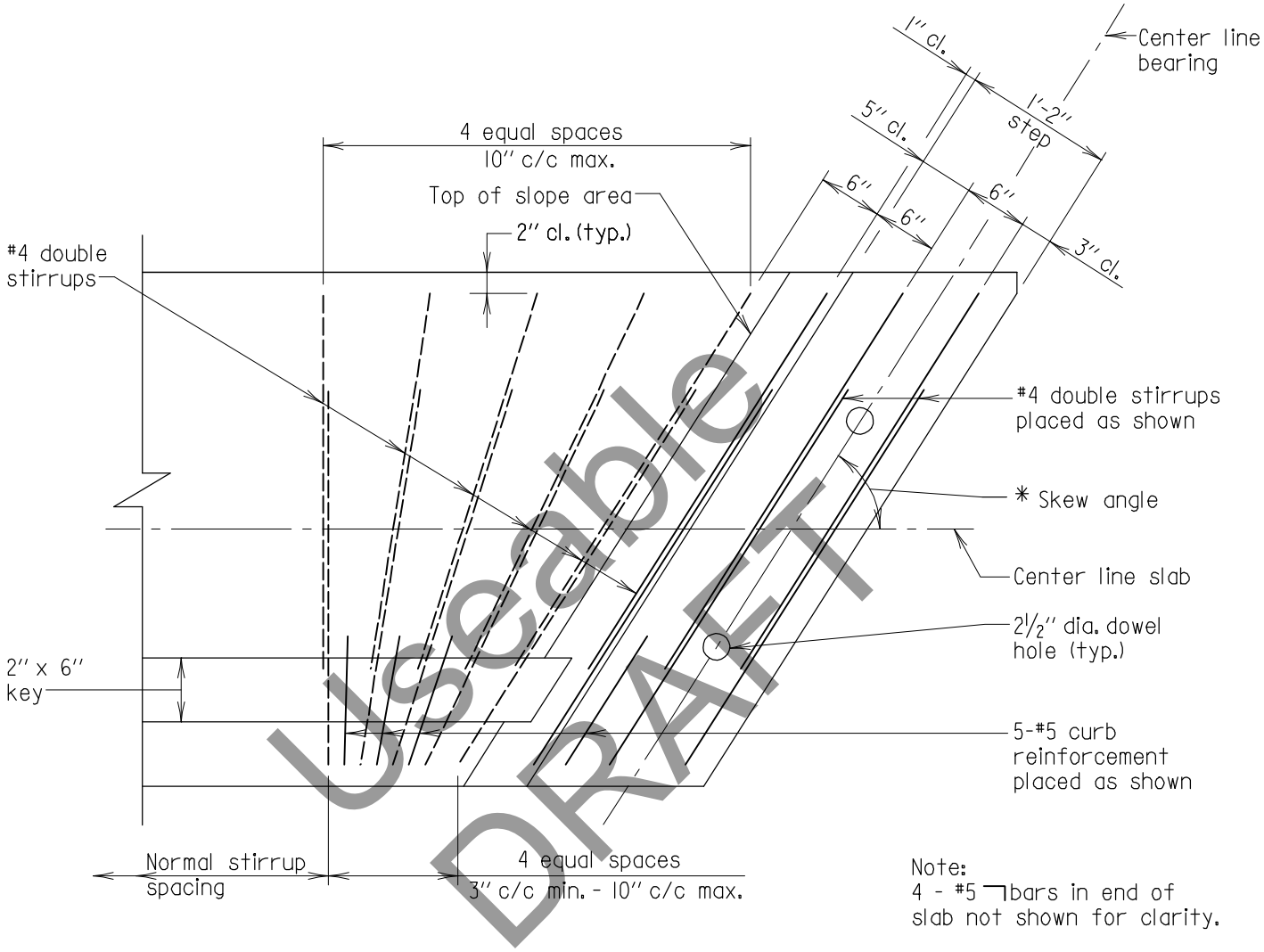

Useable DRAFT

Note:
4 - #5 ⌉bars in end of slab not shown for clarity.

*For exact skew angle, see contract plan sheets.

PLAN
Scale: ¾" = 1'-0"

Note to Fabricator:
End stirrup spacing must be laid out to determine spacing.

Note to Designer:
Layout shown works up to a skew angle of 55°. For angles less than 55° designer must layout skewed end detail on plans.

* USEABLE DRAFT *

Note:
All reinforcing steel to be epoxy coated.

APPROVAL	
_____ DIRECTOR OFFICE OF STRUCTURES DATE: 09/01/15	
REVISIONS	
SHA	FHWA
FHWA APPROVAL	
DATE:	

STATE OF MARYLAND
DEPARTMENT OF TRANSPORTATION
STATE HIGHWAY ADMINISTRATION
OFFICE OF STRUCTURES

SIMPLE SPAN GREATER THAN 25'-0" TO 30'-0"
EXTERIOR 3'-0" PRECAST CONCRETE SLAB PANEL
SKEWED END DETAIL

NO. SUP-SLAB(3FT)-303 SHEET 2 OF 2

SUPERSTRUCTURE SLABS

Notes:

1. Extreme care shall be used in locating tie rod holes during the casting operation. Contractor shall assemble the slab units for the entire bridge width at the casting plant to ensure that there is no hole misalignment prior to shipping slab units to the site. Any misalignment of the holes will be cause for rejection of the slab unit. Drilling or coring of the slabs to create new or modified cast holes is prohibited.
2. Adjust curb rebar and stirrup spacing as needed to avoid tie rod hole and railing anchor bolts (if applicable).
3. All reinforcing steel to be epoxy coated.

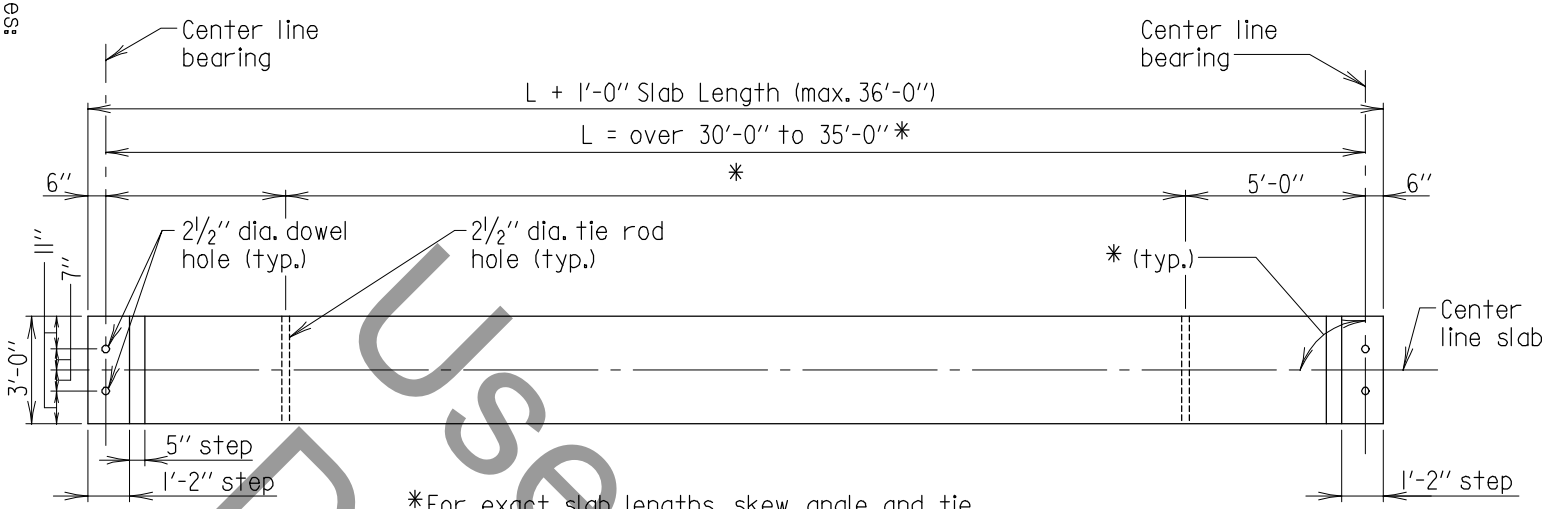

*For exact slab lengths, skew angle and tie rod pattern see contract plans' sheets.

Note:
Stirrup spacing shown is for a 90° crossing. For bridges with other skew angles, see Std. No. SUP-SLAB(3FT)-403 for details of skewed ends.

3'-0" INTERIOR SLAB PLAN
Scale: 3/16" = 1'-0"

Note:
Reinforcing steel at ends of slab not shown for clarity.

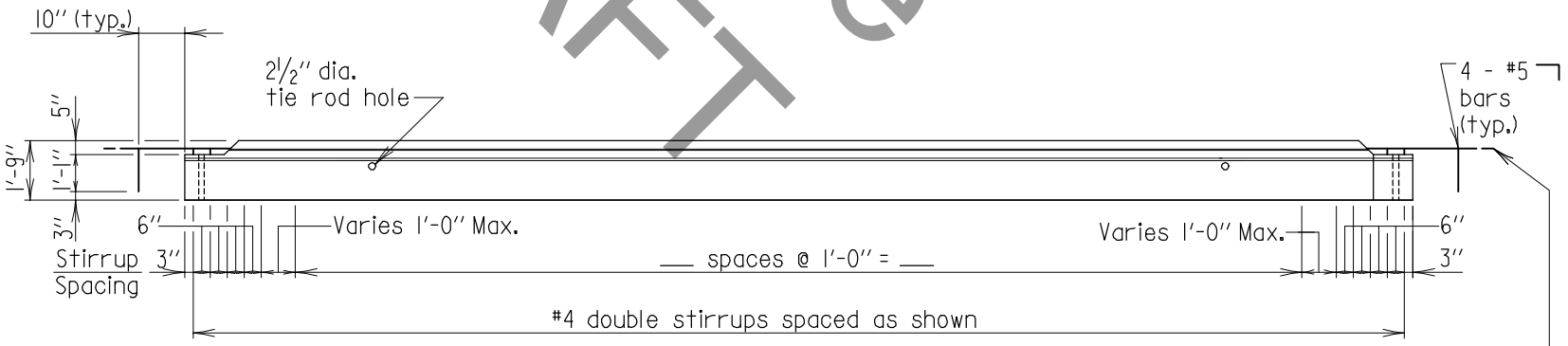

Bars to be bent at casting plant after formwork has been removed.

3'-0" INTERIOR SLAB ELEVATION
Scale: 3/16" = 1'-0"

Useable DRAFT

APPROVAL	
OFFICE OF STRUCTURES DIRECTOR	
DATE: 09/01/15	
REVISIONS	
SHA	FHWA

FHWA APPROVAL
DATE:

STATE OF MARYLAND
DEPARTMENT OF TRANSPORTATION
STATE HIGHWAY ADMINISTRATION
OFFICE OF STRUCTURES

SIMPLE SPAN GREATER THAN 30'-0" TO 35'-0"
INTERIOR 3'-0" PRECAST CONCRETE SLAB PANEL
PLAN & ELEVATION

NO. SUP-SLAB(3FT)-401 SHEET 1 OF 2

* USEABLE DRAFT *

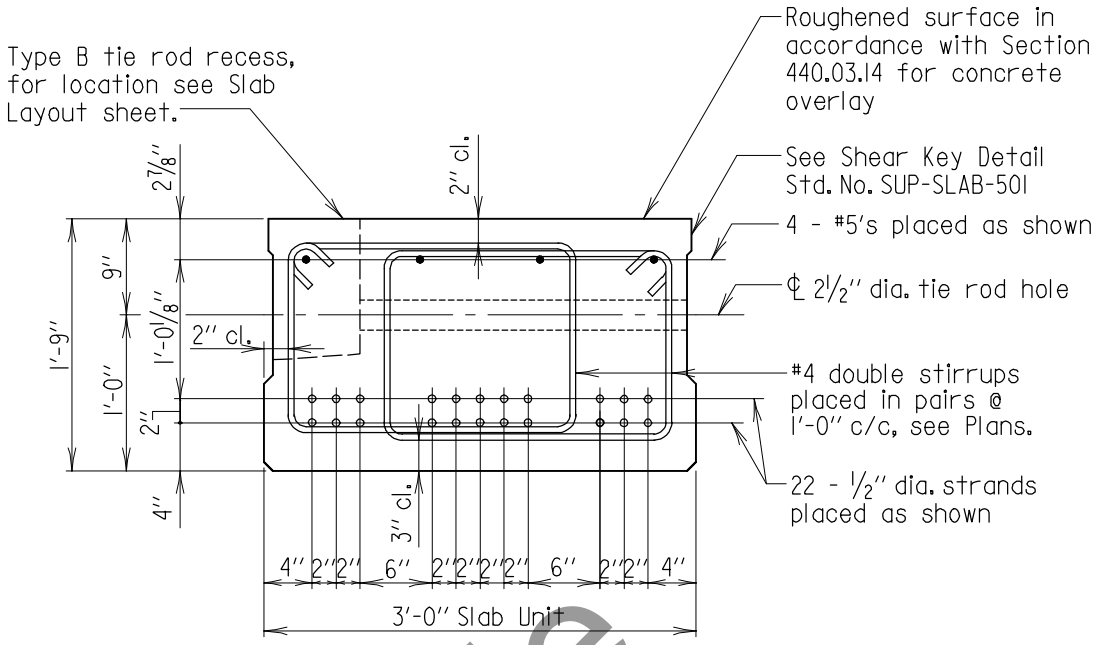

Note:
For location of tie rod holes, see contract plans.

SECTION - SLAB AT MIDSPAN
Scale: ¾" = 1'-0"

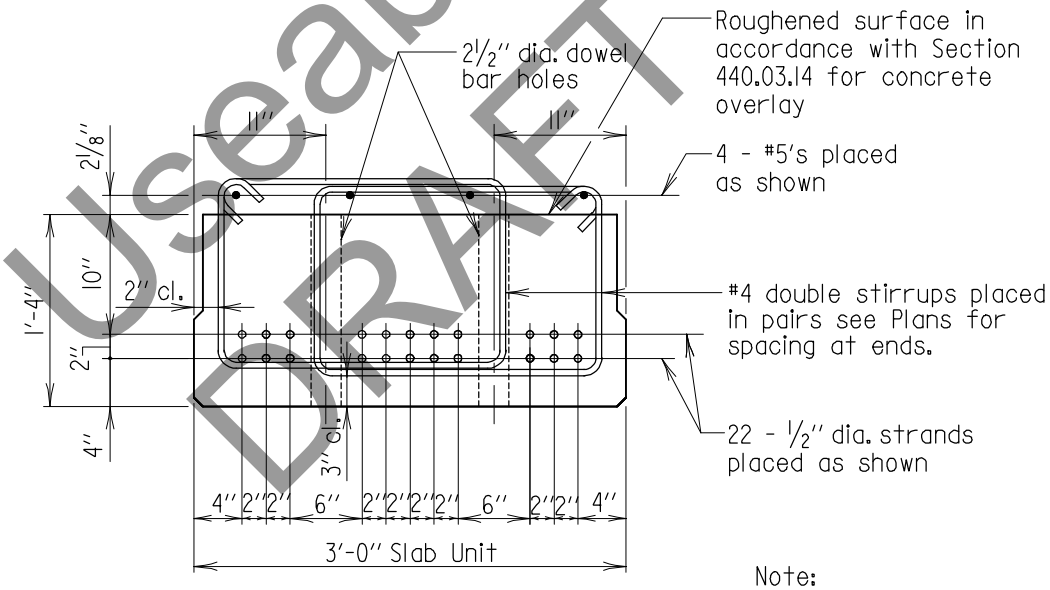

Note:
Any misplaced dowel bar holes or tie rod holes will be cause for rejection of the precast slab unit.

SECTION - SLAB AT ENDS
Scale: ¾" = 1'-0"

Useable DRAFT

* USEABLE DRAFT *

APPROVAL	
_____ DIRECTOR OFFICE OF STRUCTURES DATE: 09/01/15	
REVISIONS	
SHA	FHWA

FHWA APPROVAL
DATE:

STATE OF MARYLAND
DEPARTMENT OF TRANSPORTATION
STATE HIGHWAY ADMINISTRATION
OFFICE OF STRUCTURES

SIMPLE SPAN GREATER THAN 30'-0" TO 35'-0"
INTERIOR 3'-0" PRECAST CONCRETE SLAB PANEL SECTIONS

NO. SUP-SLAB(3FT)-401 SHEET 2 OF 2

SUPERSTRUCTURE SLABS

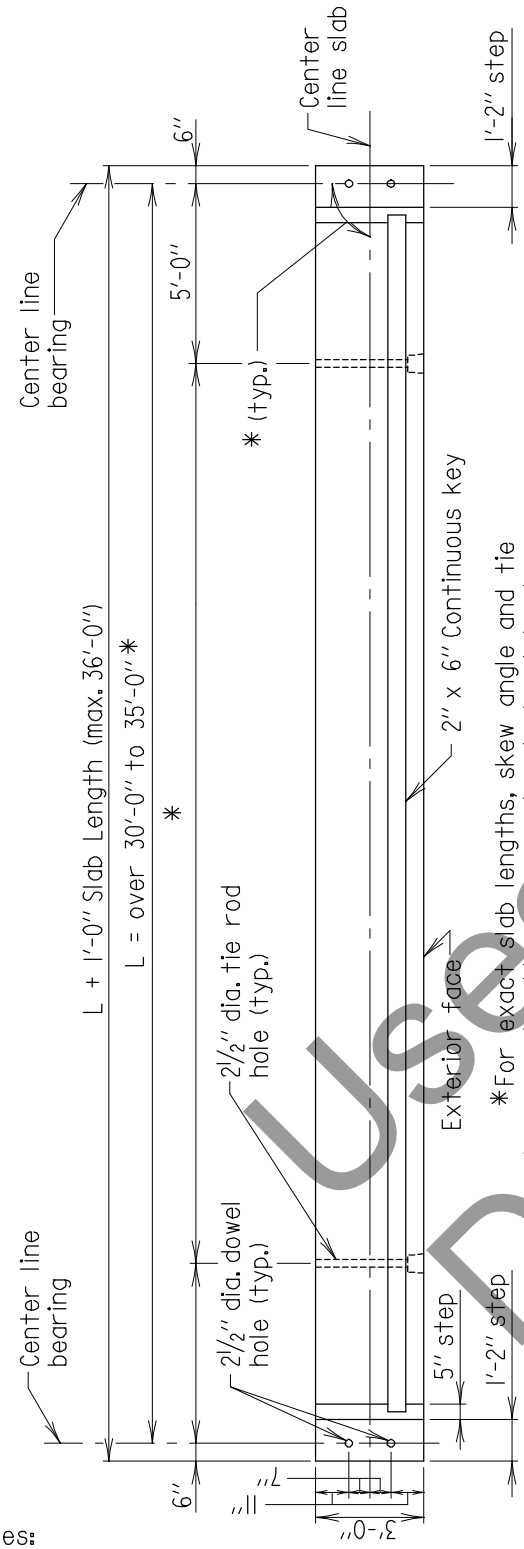

Notes:

1. Extreme care shall be used in locating tie rod holes during the casting operation. Contractor shall assemble the slab units for the entire bridge width at the casting plant to ensure that there is no hole misalignment prior to shipping slab units to the site. Any misalignment of the holes will be cause for rejection of the slab unit. Drilling or coring of the slabs to create new or modified cast holes is prohibited.
2. Adjust curb rebar and stirrup spacing as needed to avoid tie rod hole and railing anchor bolts (if applicable).
3. All reinforcing steel to be epoxy coated.

*For exact slab lengths, skew angle and tie rod pattern see contract plans' sheets.

3'-0" EXTERIOR SLAB PLAN
Scale: 3/16" = 1'-0"

Note:
Reinforcing steel at ends of slab and curb reinforcing not shown for clarity.

Note:
Stirrup spacing shown is for a 90° crossing. For bridges with other skew angles, see Std. No. SUP-SLAB(3FT)-403 for details of skewed ends.

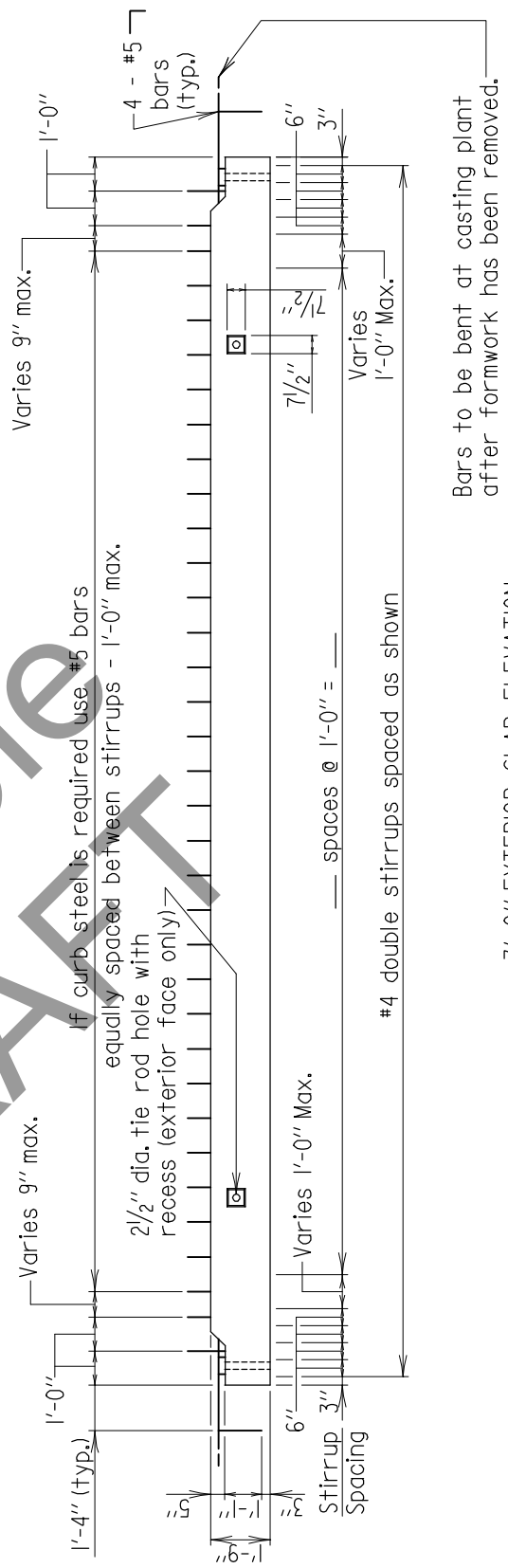

3'-0" EXTERIOR SLAB ELEVATION
Scale: 3/16" = 1'-0"

Useable DRAFT

* USEABLE DRAFT *

APPROVAL	
_____ DIRECTOR OFFICE OF STRUCTURES	
DATE: 09/01/15	
REVISIONS	
SHA	FHWA
FHWA APPROVAL	
DATE:	

STATE OF MARYLAND
DEPARTMENT OF TRANSPORTATION
STATE HIGHWAY ADMINISTRATION
OFFICE OF STRUCTURES

SIMPLE SPAN GREATER THAN 30'-0" TO 35'-0"
EXTERIOR 3'-0" PRECAST CONCRETE SLAB PANEL
PLAN & ELEVATION

NO. SUP-SLAB(3FT)-402 SHEET 1 OF 2

SUPERSTRUCTURE SLABS

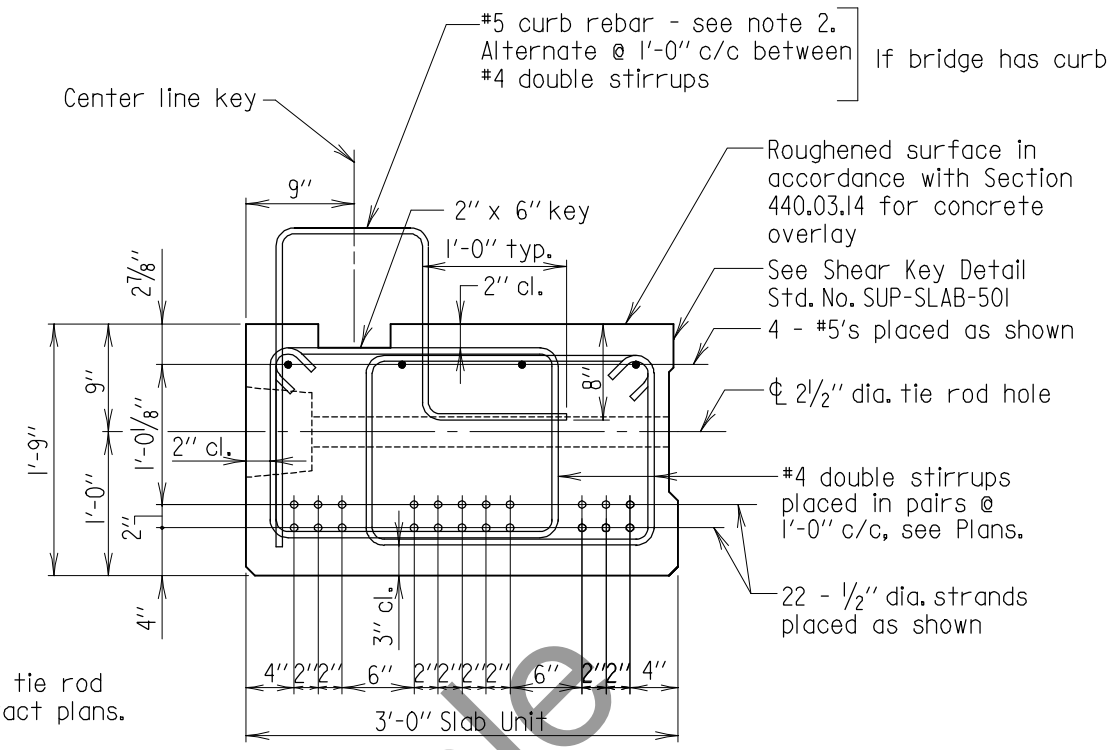

Notes:

1. For location of tie rod holes, see contract plans.

2. For location of curb reinforcement and anchor bolts and plates to be cast in slab for railing, see Std. No. SUP-TB(TR)-301

SECTION - SLAB AT MIDSPAN

Scale: ¾" = 1'-0"

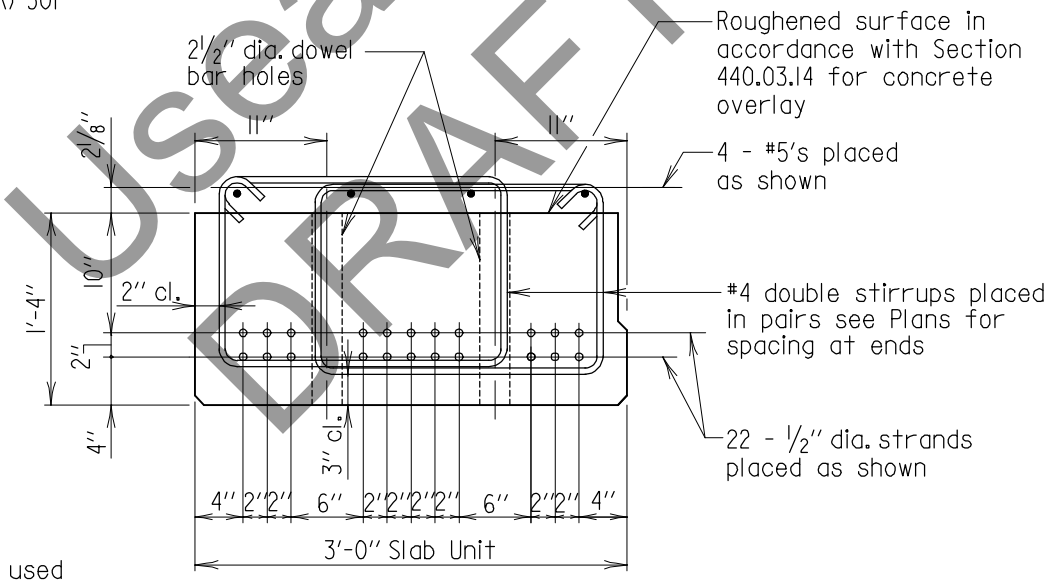

SECTION - SLAB AT ENDS

Scale: ¾" = 1'-0"

Note:
Extreme care shall be used when placing and tieing the curb rebar, railing and anchor bolts assembly to provide for the required clearances. Any misplaced rebar, dowel bar holes, tie rod holes or anchor bolts will be cause for rejection of the precast slab unit.

Useable DRAFT

* USEABLE DRAFT *

APPROVAL	
_____ DIRECTOR OFFICE OF STRUCTURES DATE: 09/01/15	
REVISIONS	
SHA	FHWA

FHWA APPROVAL
DATE:

STATE OF MARYLAND
DEPARTMENT OF TRANSPORTATION
STATE HIGHWAY ADMINISTRATION
OFFICE OF STRUCTURES

SIMPLE SPAN GREATER THAN 30'-0" TO 35'-0"
EXTERIOR 3'-0" PRECAST CONCRETE SLAB PANEL SECTIONS

NO. SUP-SLAB(3FT)-402 SHEET 2 OF 2

SUPERSTRUCTURE SLABS

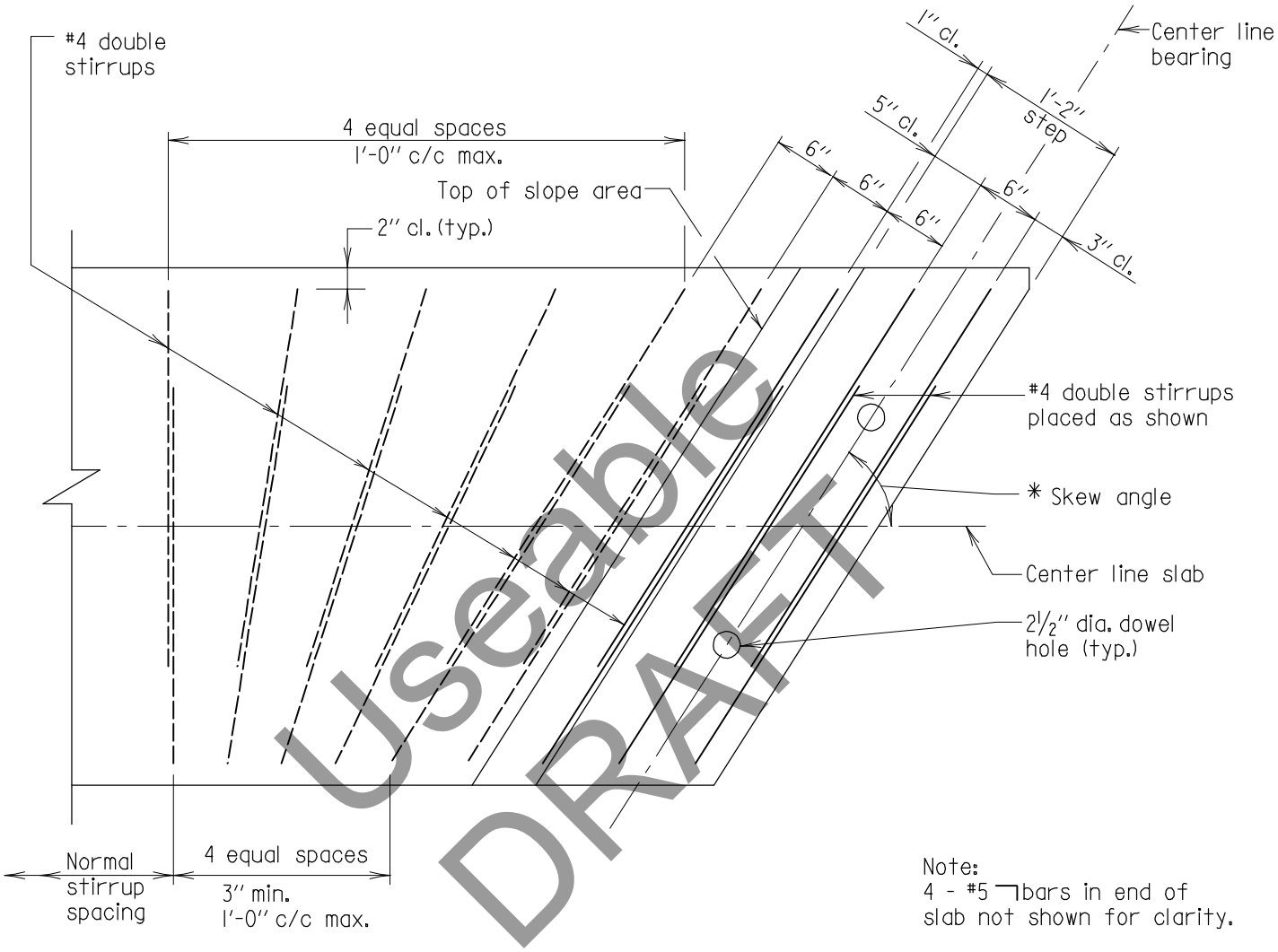

Useable DRAFT

Note:
4 - #5 ⌐bars in end of slab not shown for clarity.

*For exact skew angle, see contract plan sheets.

PLAN
Scale: ¾" = 1'-0"

Note to Fabricator:
End stirrup spacing must be laid out to determine spacing.

Note to Designer:
Layout shown works up to a skew angle of 55°. For angles less than 55° designer must layout skewed end detail on plans.

* USEABLE DRAFT *

Note:
All reinforcing steel to be epoxy coated.

APPROVAL	
_____ DIRECTOR OFFICE OF STRUCTURES DATE: 09/01/15	
REVISIONS	
SHA	FHWA
FHWA APPROVAL	
DATE:	

STATE OF MARYLAND
DEPARTMENT OF TRANSPORTATION
STATE HIGHWAY ADMINISTRATION
OFFICE OF STRUCTURES

SIMPLE SPAN GREATER THAN 30'-0" TO 35'-0"
INTERIOR 3'-0" PRECAST CONCRETE SLAB PANEL
SKEWED END DETAIL

NO. SUP-SLAB(3FT)-403 SHEET 1 OF 2

SUPERSTRUCTURE SLABS

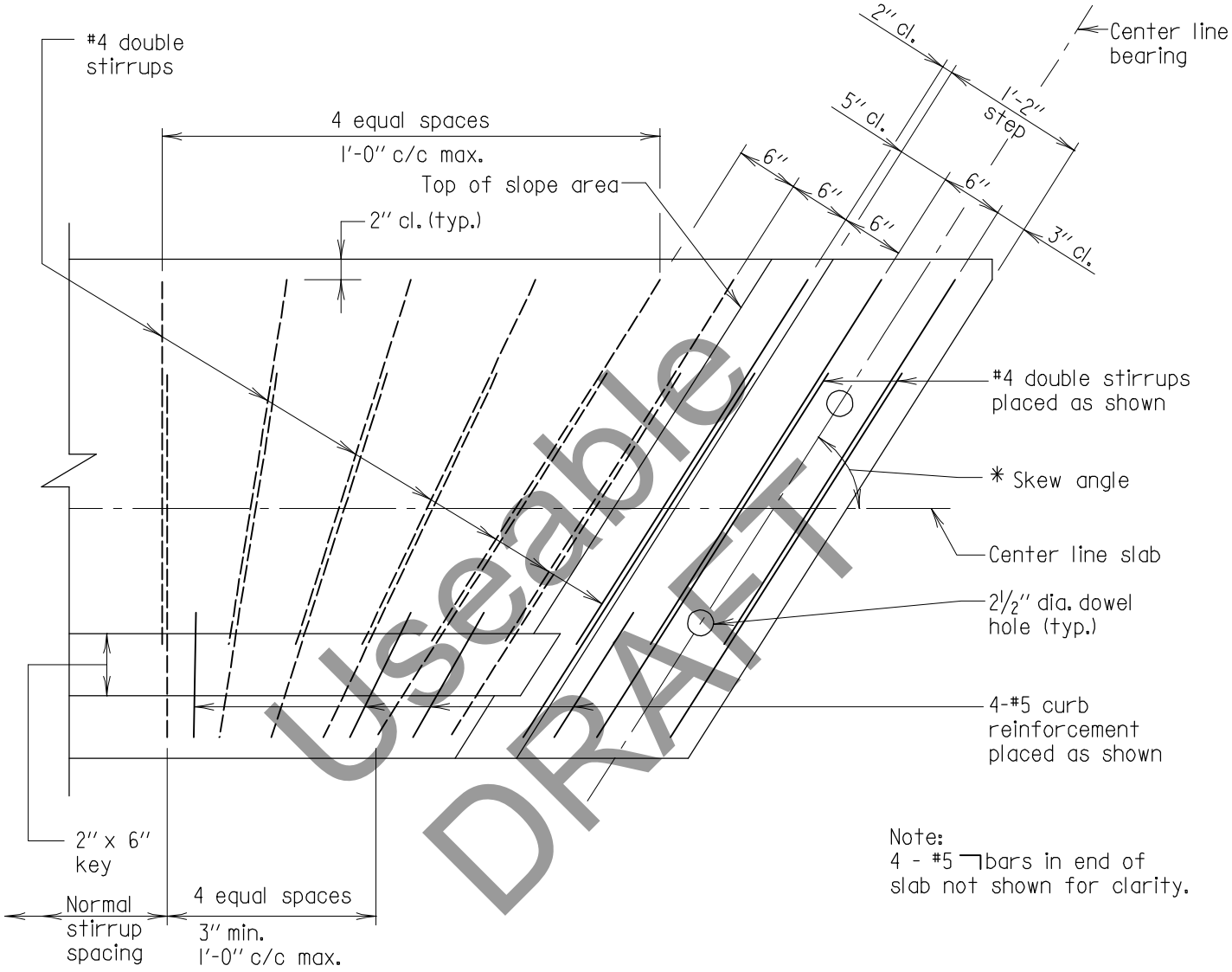

Useable DRAFT

Note:
4 - #5 ⌐bars in end of slab not shown for clarity.

*For exact skew angle, see contract plan sheets.

PLAN
Scale: 3/4" = 1'-0"

Note to Fabricator:
End stirrup spacing must be laid out to determine spacing.

Note to Designer:
Layout shown works up to a skew angle of 55°. For angles less than 55° designer must layout skewed end detail on plans.

* USEABLE DRAFT *

Note:
All reinforcing steel to be epoxy coated.

APPROVAL	
_____ DIRECTOR OFFICE OF STRUCTURES DATE: 09/01/15	
REVISIONS	
SHA	FHWA
FHWA APPROVAL	
DATE:	

STATE OF MARYLAND
DEPARTMENT OF TRANSPORTATION
STATE HIGHWAY ADMINISTRATION
OFFICE OF STRUCTURES

SIMPLE SPAN GREATER THAN 30'-0" TO 35'-0"
EXTERIOR 3'-0" PRECAST CONCRETE SLAB PANEL
SKEWED END DETAIL

NO. SUP-SLAB(3FT)-403 SHEET 2 OF 2

SUPERSTRUCTURE SLABS

Notes:

1. Extreme care shall be used in locating tie rod holes during the casting operation. Contractor shall assemble the slab units for the entire bridge width at the casting plant to ensure that there is no hole misalignment prior to shipping slab units to the site. Any misalignment of the holes will be cause for rejection of the slab unit. Drilling or coring of the slabs to create new or modified cast holes is prohibited.
2. Adjust curb rebar and stirrup spacing as needed to avoid tie rod hole and railing anchor bolts (if applicable).
3. All reinforcing steel to be epoxy coated.

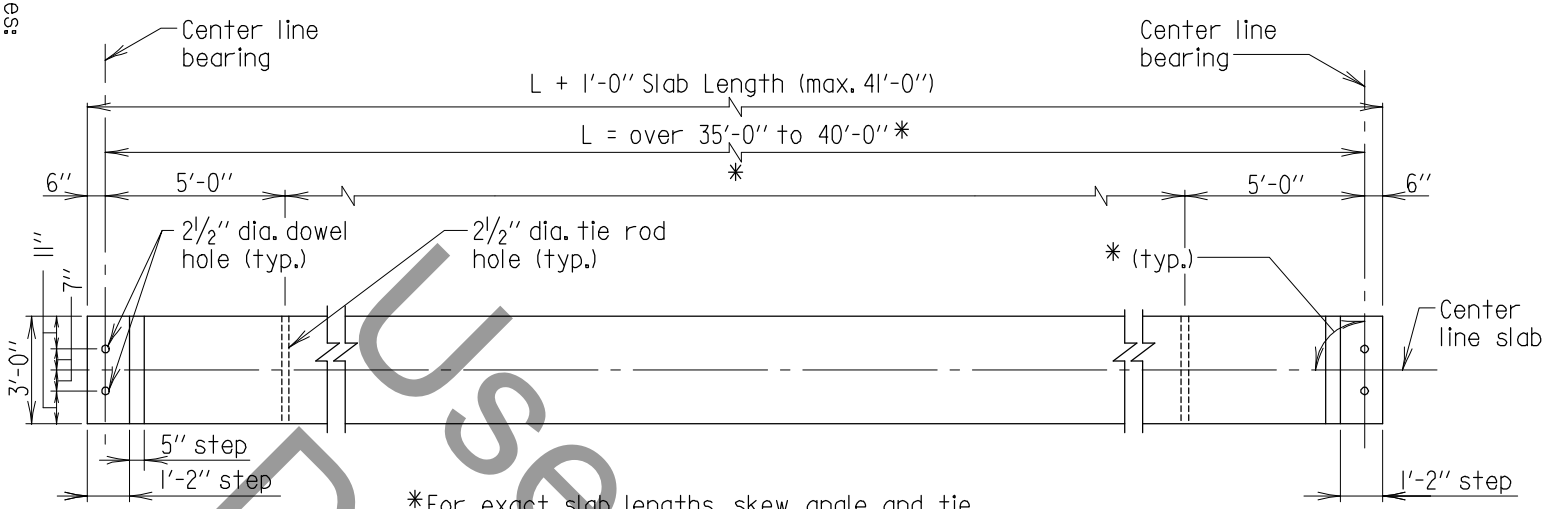

*For exact slab lengths, skew angle and tie rod pattern see contract plans' sheets.

Note:
Stirrup spacing shown is for a 90° crossing. For bridges with other skew angles, see Std. No. SUP-SLAB(3FT)-503 for details of skewed ends.

3'-0" INTERIOR SLAB PLAN
Scale: 3/16" = 1'-0"

Note:
Reinforcing steel at ends of slab not shown for clarity.

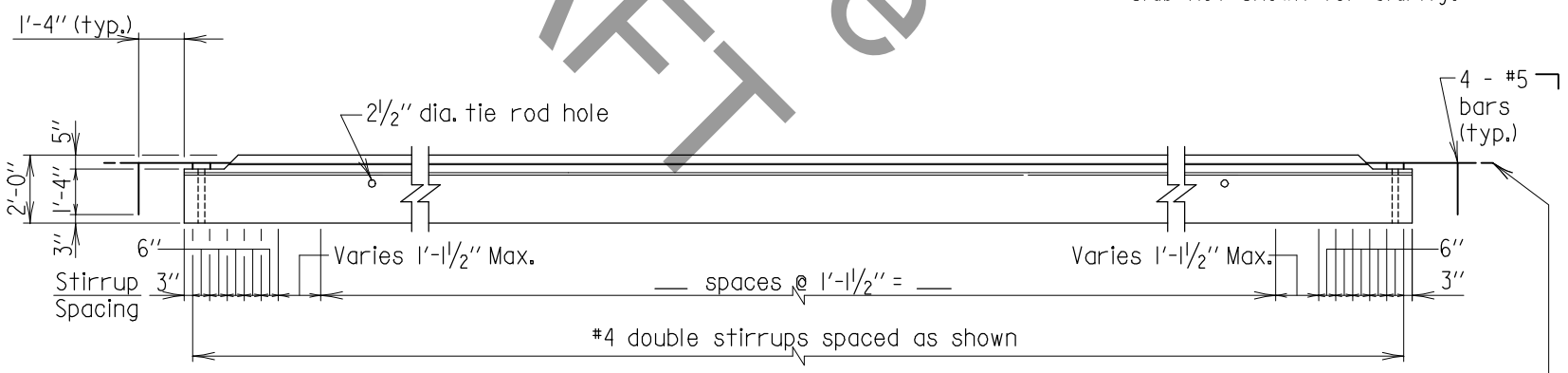

3'-0" INTERIOR SLAB ELEVATION
Scale: 3/16" = 1'-0"

Useable DRAFT

APPROVAL	
DIRECTOR OFFICE OF STRUCTURES	
DATE: 09/01/15	
REVISIONS	
SHA	FHWA

FHWA APPROVAL
DATE:

STATE OF MARYLAND
DEPARTMENT OF TRANSPORTATION
STATE HIGHWAY ADMINISTRATION
OFFICE OF STRUCTURES

SIMPLE SPAN GREATER THAN 35'-0" TO 40'-0"
INTERIOR 3'-0" PRECAST CONCRETE SLAB PANEL
PLAN & ELEVATION

NO. SUP-SLAB(3FT)-501 SHEET 1 OF 2

* USEABLE DRAFT *

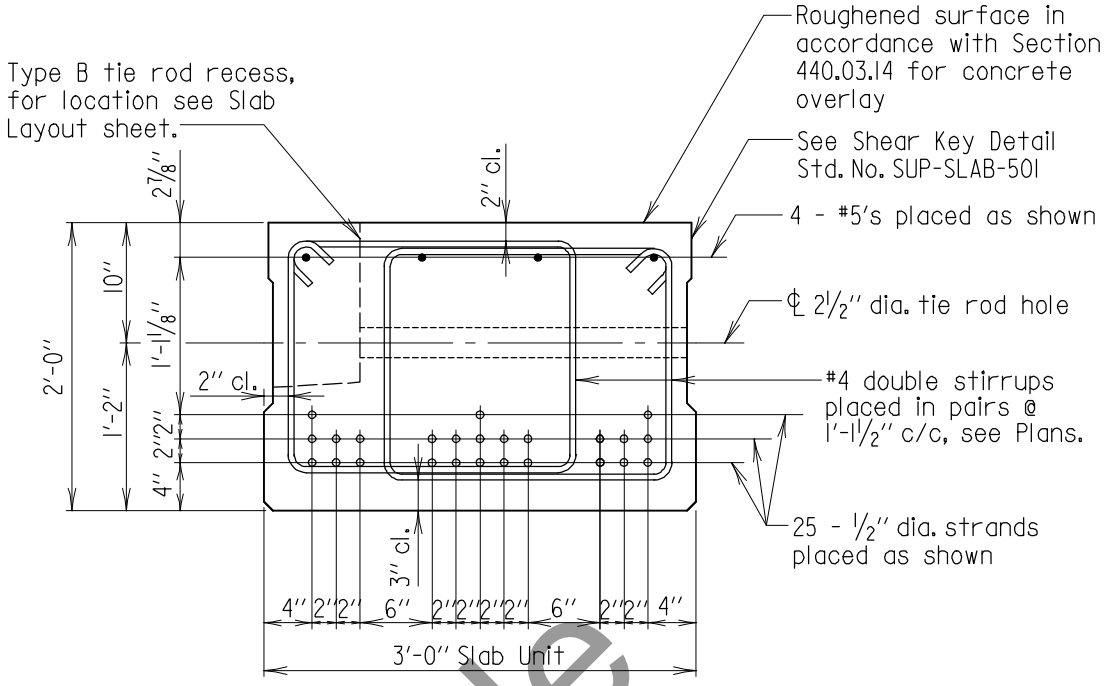

Note:
For location of tie rod holes, see contract plans.

SECTION - SLAB AT MIDSPAN
Scale: ¾" = 1'-0"

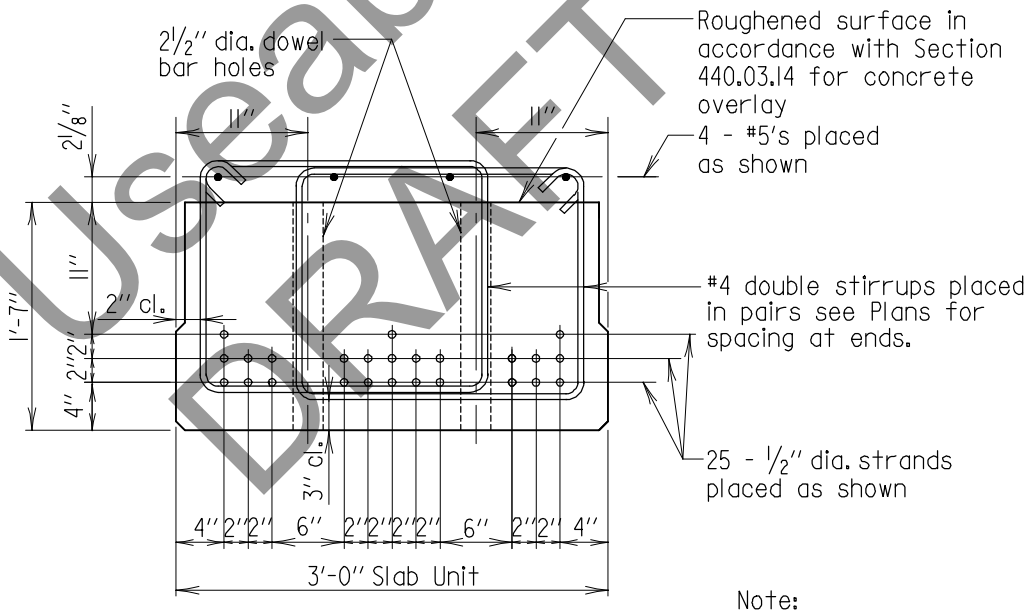

SECTION - SLAB AT ENDS
Scale: ¾" = 1'-0"

Note:
Any misplaced dowel bar holes or tie rod holes will be cause for rejection of the precast slab unit.

Useable DRAFT

* USEABLE DRAFT *

APPROVAL	
_____ DIRECTOR OFFICE OF STRUCTURES DATE: 09/01/15	
REVISIONS	
SHA	FHWA
FHWA APPROVAL	
DATE:	

STATE OF MARYLAND
DEPARTMENT OF TRANSPORTATION
STATE HIGHWAY ADMINISTRATION
OFFICE OF STRUCTURES

SIMPLE SPAN GREATER THAN 35'-0" TO 40'-0"
INTERIOR 3'-0" PRECAST CONCRETE SLAB PANEL SECTIONS

NO. SUP-SLAB(3FT)-501 SHEET 2 OF 2

SUPERSTRUCTURE SLABS

Notes:

1. Extreme care shall be used in locating tie rod holes during the casting operation. Contractor shall assemble the slab units for the entire bridge width at the casting plant to ensure that there is no hole misalignment prior to shipping slab units to the site. Any misalignment of the holes will be cause for rejection of the slab unit. Drilling or coring of the slabs to create new or modified cast holes is prohibited.
2. Adjust curb rebar and stirrup spacing as needed to avoid tie rod hole and railing anchor bolts (if applicable).
3. All reinforcing steel to be epoxy coated.

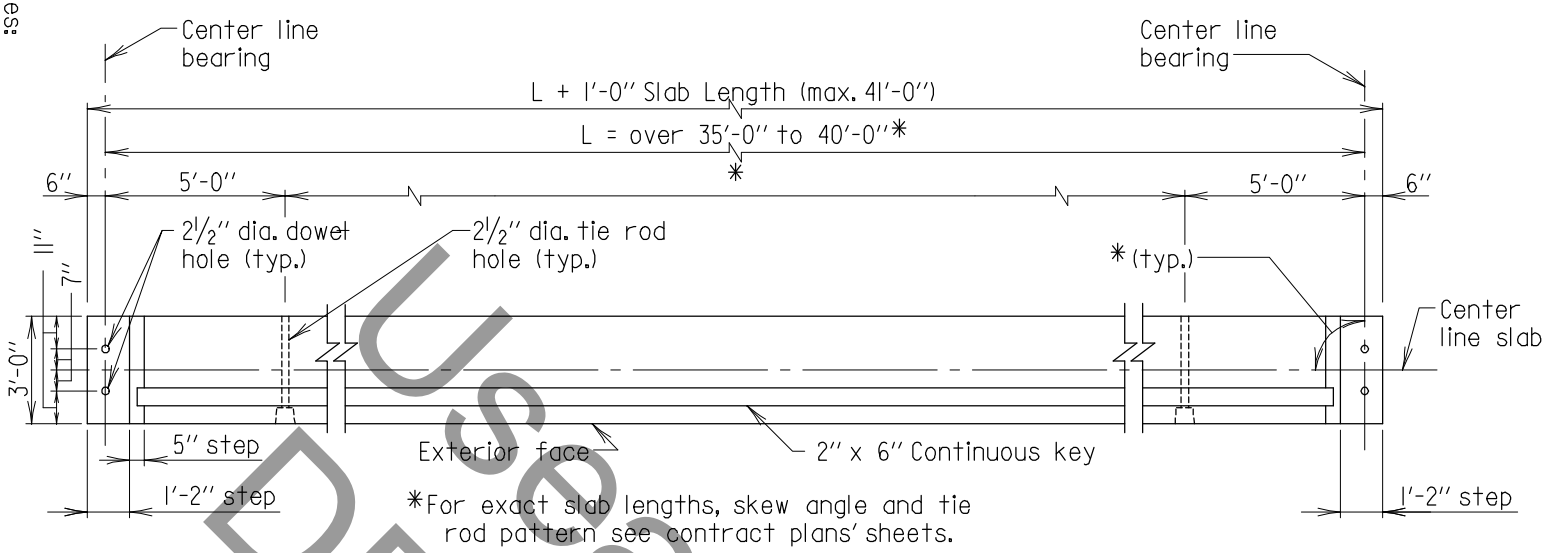

*For exact slab lengths, skew angle and tie rod pattern see contract plans' sheets.

Note:
Stirrup spacing shown is for a 90° crossing. For bridges with other skew angles, see Std. No. SUP-SLAB(3FT)-503 for details of skewed ends.

3'-0" EXTERIOR SLAB PLAN
Scale: 3/16" = 1'-0"

Note:
Reinforcing steel at ends of slab and curb reinforcing not shown for clarity.

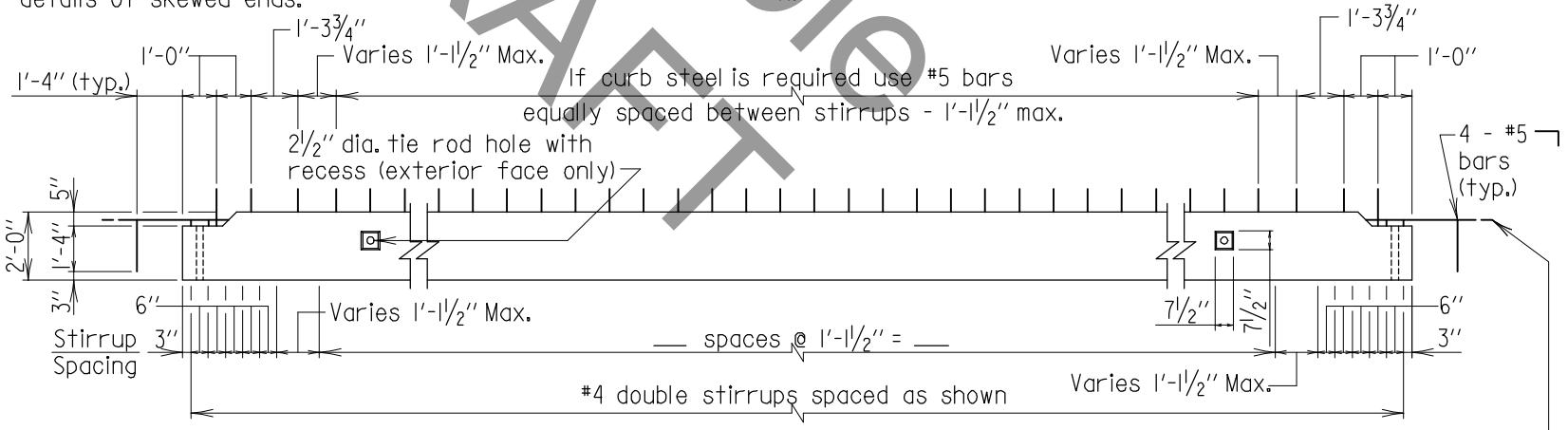

3'-0" EXTERIOR SLAB ELEVATION
Scale: 3/16" = 1'-0"

Useable DRAFT

APPROVAL	
OFFICE OF STRUCTURES DIRECTOR	
DATE: 09/01/15	
REVISIONS	
SHA	FHWA

FHWA APPROVAL
DATE:

STATE OF MARYLAND
DEPARTMENT OF TRANSPORTATION
STATE HIGHWAY ADMINISTRATION
OFFICE OF STRUCTURES

SIMPLE SPAN GREATER THAN 35'-0" TO 40'-0"
EXTERIOR 3'-0" PRECAST CONCRETE SLAB PANEL
PLAN & ELEVATION

NO. SUP-SLAB(3FT)-502 SHEET 1 OF 2

* USEABLE DRAFT *

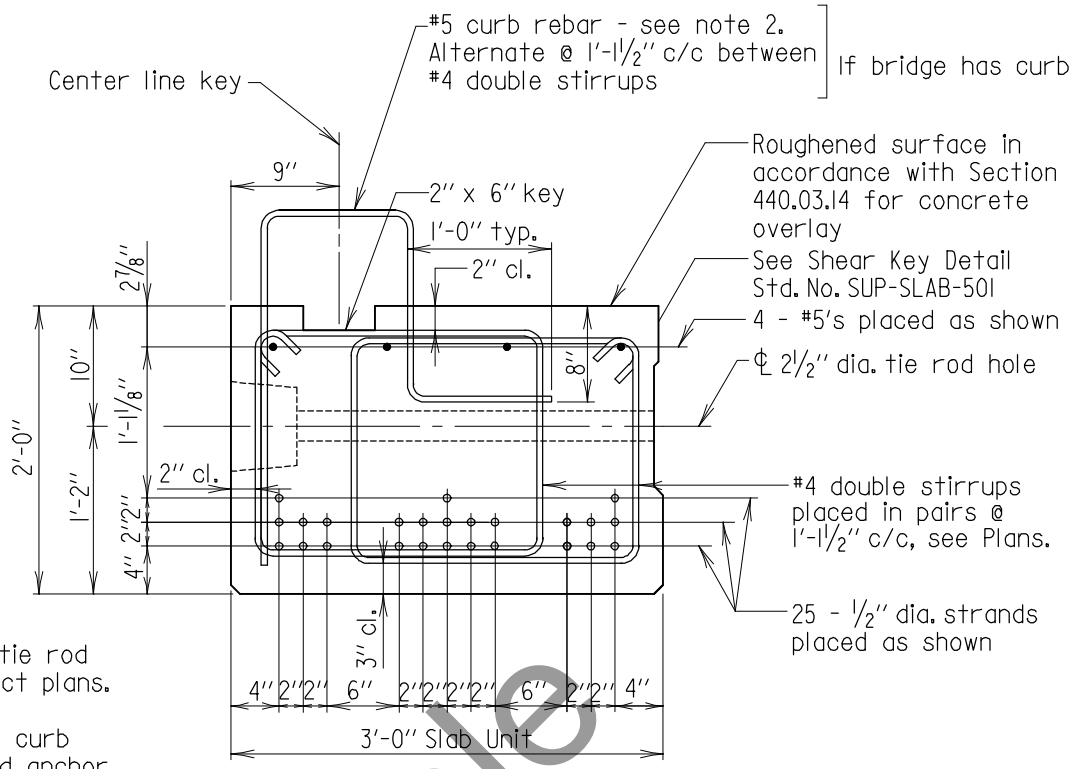

Notes:

1. For location of tie rod holes, see contract plans.

2. For location of curb reinforcement and anchor bolts and plates to be cast in slab for railing, see Std. No. SUP-TB(TR)-301

SECTION - SLAB AT MIDSPAN

Scale: ¾" = 1'-0"

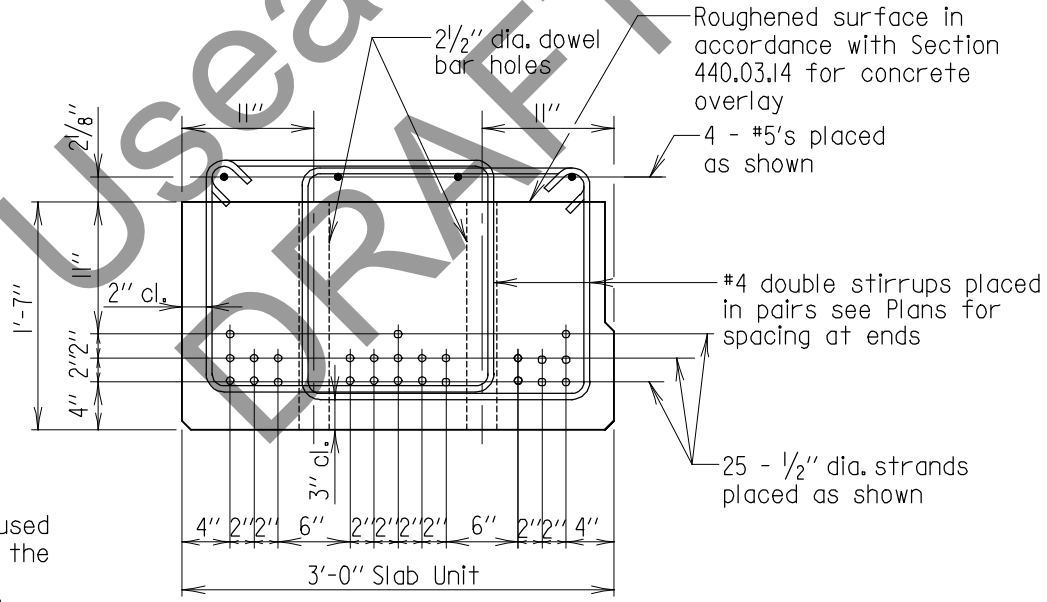

Note:
Extreme care shall be used when placing and tieing the curb rebar, railing and anchor bolts assembly to provide for the required clearances. Any misplaced rebar, dowel bar holes, tie rod holes or anchor bolts will be cause for rejection of the precast slab unit.

SECTION - SLAB AT ENDS

Scale: ¾" = 1'-0"

Useable DRAFT

* USEABLE DRAFT *

APPROVAL	
_____ DIRECTOR OFFICE OF STRUCTURES DATE: 09/01/15	
REVISIONS	
SHA	FHWA
FHWA APPROVAL	
DATE:	

STATE OF MARYLAND
DEPARTMENT OF TRANSPORTATION
STATE HIGHWAY ADMINISTRATION
OFFICE OF STRUCTURES

SIMPLE SPAN GREATER THAN 35'-0" TO 40'-0"
EXTERIOR 3'-0" PRECAST CONCRETE SLAB PANEL SECTIONS

NO. SUP-SLAB(3FT)-502 SHEET 2 OF 2

SUPERSTRUCTURE SLABS

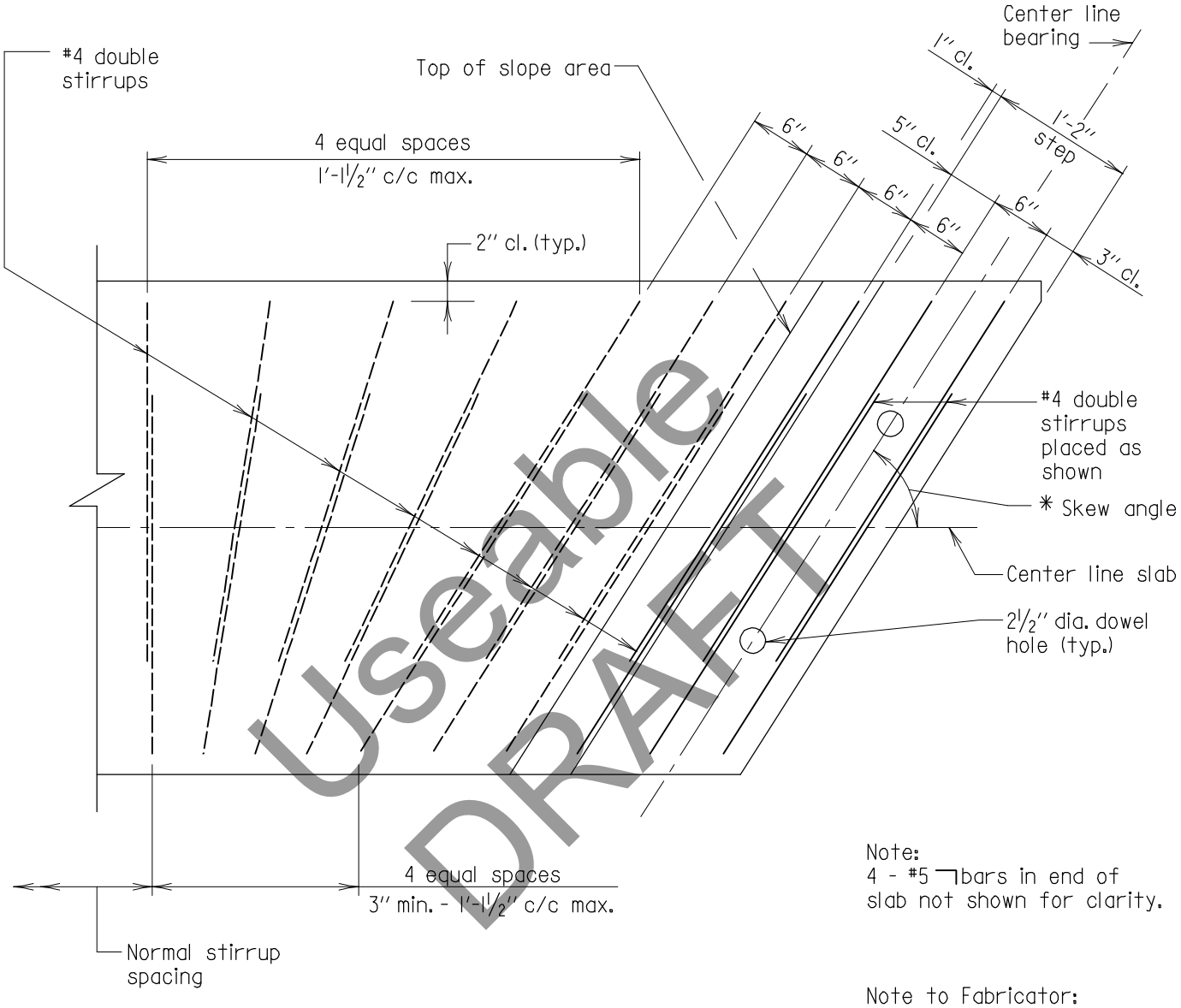

Useable DRAFT

Note:
4 - #5 ⌉bars in end of slab not shown for clarity.

*For exact skew angle, see contract plan sheets.

PLAN
Scale: ¾" = 1'-0"

Note to Fabricator:
End stirrup spacing must be laid out to determine spacing.

Note to Designer:
Layout shown works up to a skew angle of 55°. For angles less than 55° designer must layout skewed end detail on plans.

* USEABLE DRAFT *

Note:
All reinforcing steel to be epoxy coated.

APPROVAL	
_____ DIRECTOR OFFICE OF STRUCTURES DATE: 09/01/15	
REVISIONS	
SHA	FHWA
FHWA APPROVAL	
DATE:	

STATE OF MARYLAND
DEPARTMENT OF TRANSPORTATION
STATE HIGHWAY ADMINISTRATION
OFFICE OF STRUCTURES

SIMPLE SPAN GREATER THAN 35'-0" TO 40'-0"
INTERIOR 3'-0" PRECAST CONCRETE SLAB PANEL
SKEWED END DETAIL

NO. SUP-SLAB(3FT)-503 SHEET 1 OF 2

SUPERSTRUCTURE SLABS

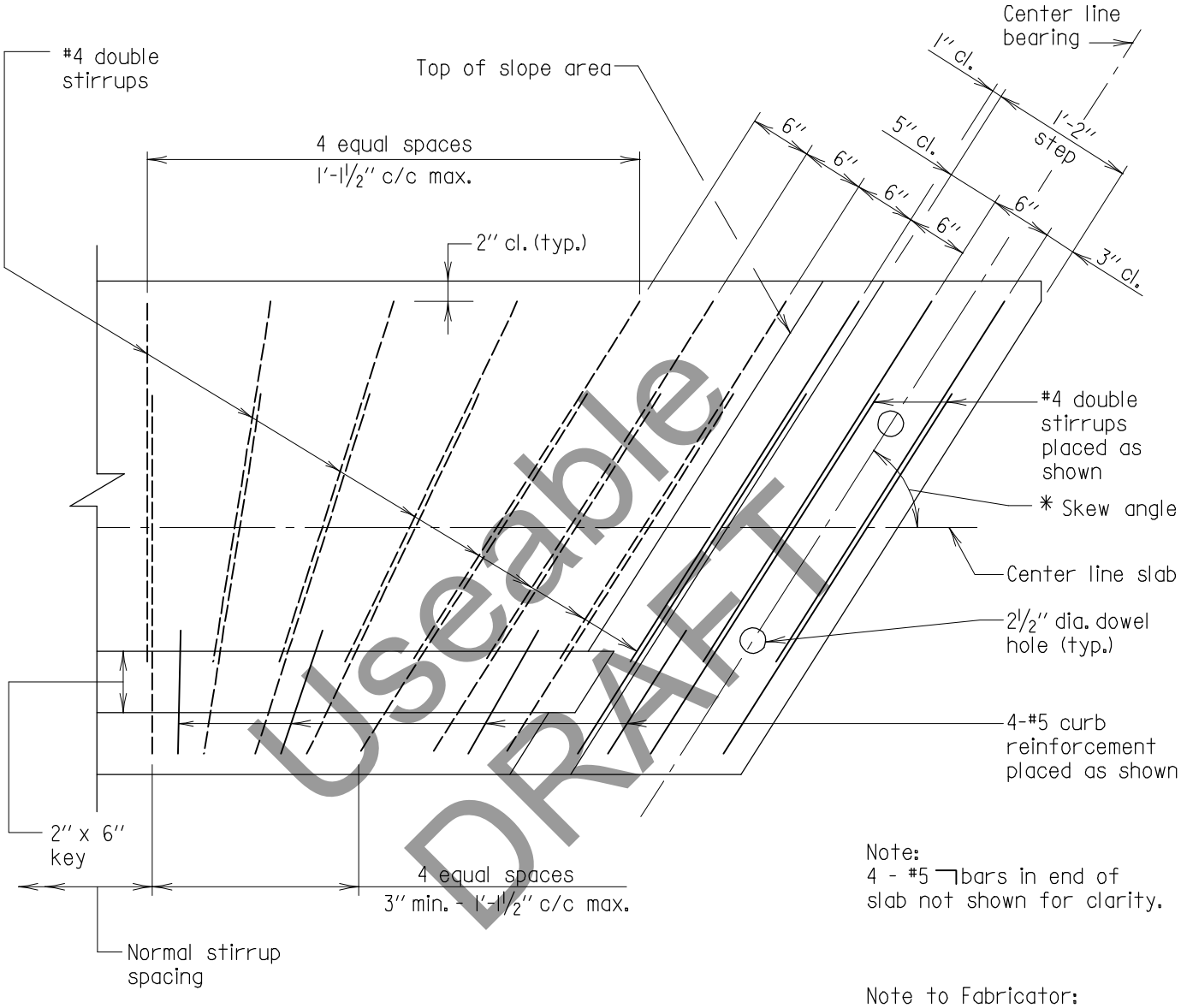

Useable DRAFT

Note:
4 - #5 ⌉bars in end of slab not shown for clarity.

*For exact skew angle, see contract plan sheets.

PLAN
Scale: ¾'' = 1'-0''

Note to Fabricator:
End stirrup spacing must be laid out to determine spacing.

Note to Designer:
Layout shown works up to a skew angle of 55°. For angles less than 55° designer must layout skewed end detail on plans.

Note:
All reinforcing steel to be epoxy coated.

APPROVAL	
_____ DIRECTOR OFFICE OF STRUCTURES DATE: 09/01/15	
REVISIONS	
SHA	FHWA

FHWA APPROVAL
DATE:

STATE OF MARYLAND
DEPARTMENT OF TRANSPORTATION
STATE HIGHWAY ADMINISTRATION
OFFICE OF STRUCTURES

SIMPLE SPAN GREATER THAN 35'-0'' TO 40'-0''
EXTERIOR 3'-0'' PRECAST CONCRETE SLAB PANEL
SKEWED END DETAIL

NO. SUP-SLAB(3FT)-503 SHEET 2 OF 2

SUPERSTRUCTURE SLABS

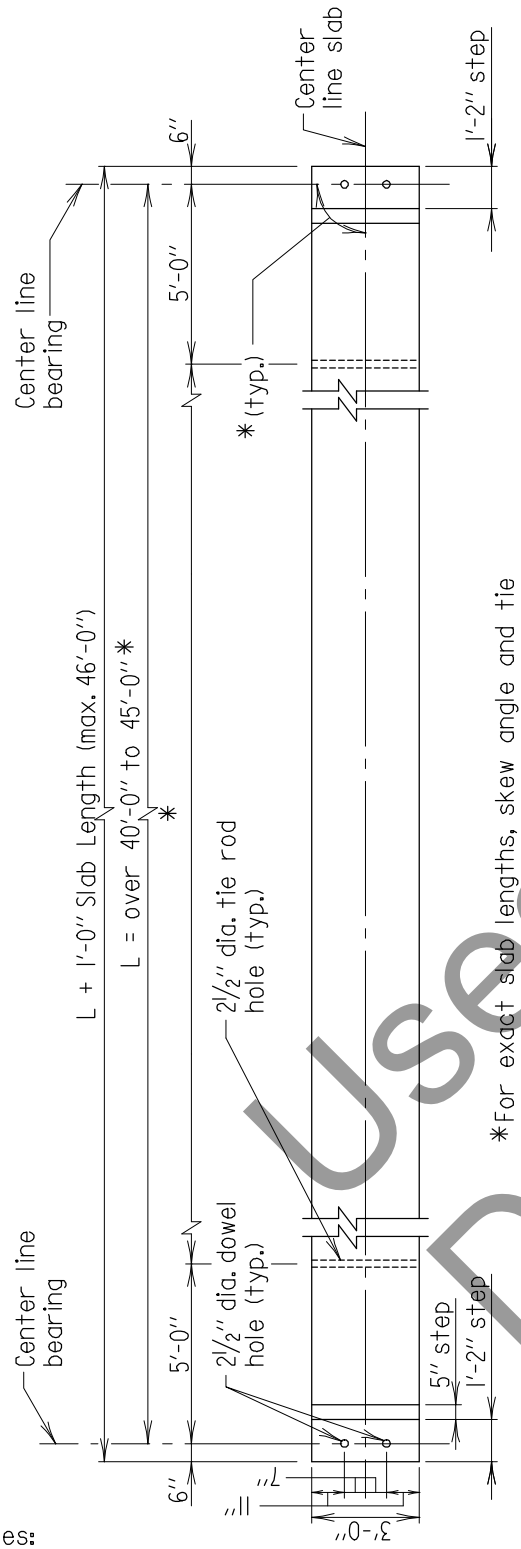

3'-0'' INTERIOR SLAB PLAN
Scale: 3/16'' = 1'-0''

*For exact slab lengths, skew angle and tie rod pattern see contract plans' sheets.

Note:
Reinforcing steel at ends of slab not shown for clarity.

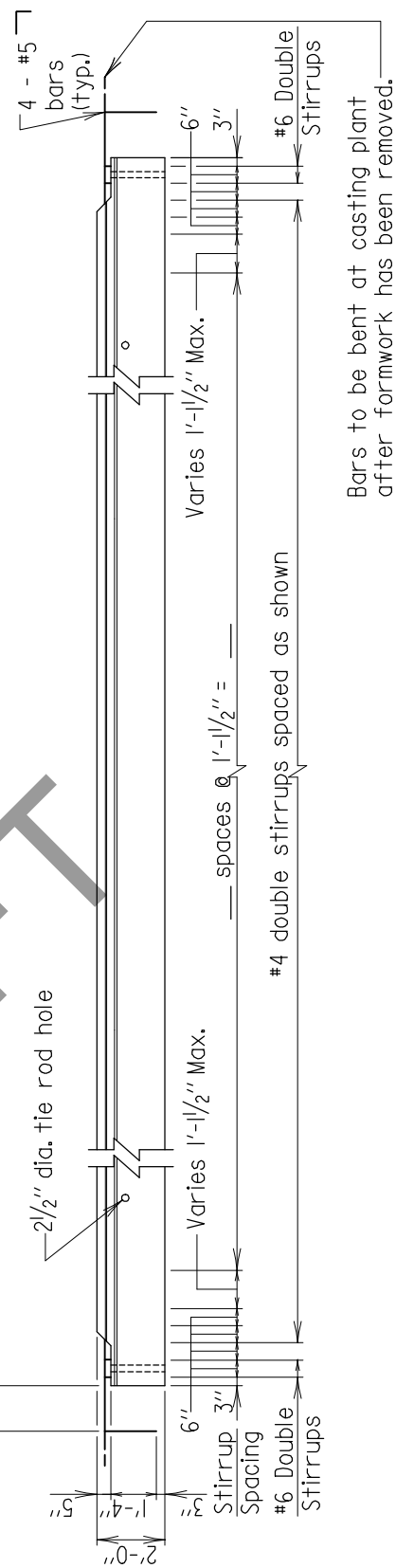

3'-0'' INTERIOR SLAB ELEVATION
Scale: 3/16'' = 1'-0''

Note:
Stirrup spacing shown is for a 90° crossing. For bridges with other skew angles, see Std. No. SUP-SLAB(3FT)-603 for details of skewed ends.

Notes:

1. Extreme care shall be used in locating tie rod holes during the casting operation. Contractor shall assemble the slab units for the entire bridge width at the casting plant to ensure that there is no hole misalignment prior to shipping slab units to the site. Any misalignment of the holes will be cause for rejection of the slab unit. Drilling or coring of the slabs to create new or modified cast holes is prohibited.
2. Adjust curb rebar and stirrup spacing as needed to avoid tie rod hole and railing anchor bolts (if applicable).
3. All reinforcing steel to be epoxy coated.

Useable DRAFT

* USEABLE DRAFT *

APPROVAL	
_____ DIRECTOR OFFICE OF STRUCTURES	
DATE: 09/01/15	
REVISIONS	
SHA	FHWA

FHWA APPROVAL
DATE:

STATE OF MARYLAND
DEPARTMENT OF TRANSPORTATION
STATE HIGHWAY ADMINISTRATION
OFFICE OF STRUCTURES

SIMPLE SPAN GREATER THAN 40'-0'' TO 45'-0''
INTERIOR 3'-0'' PRECAST CONCRETE SLAB PANEL
PLAN & ELEVATION

NO. SUP-SLAB(3FT)-601 SHEET 1 OF 2

SUPERSTRUCTURE SLABS

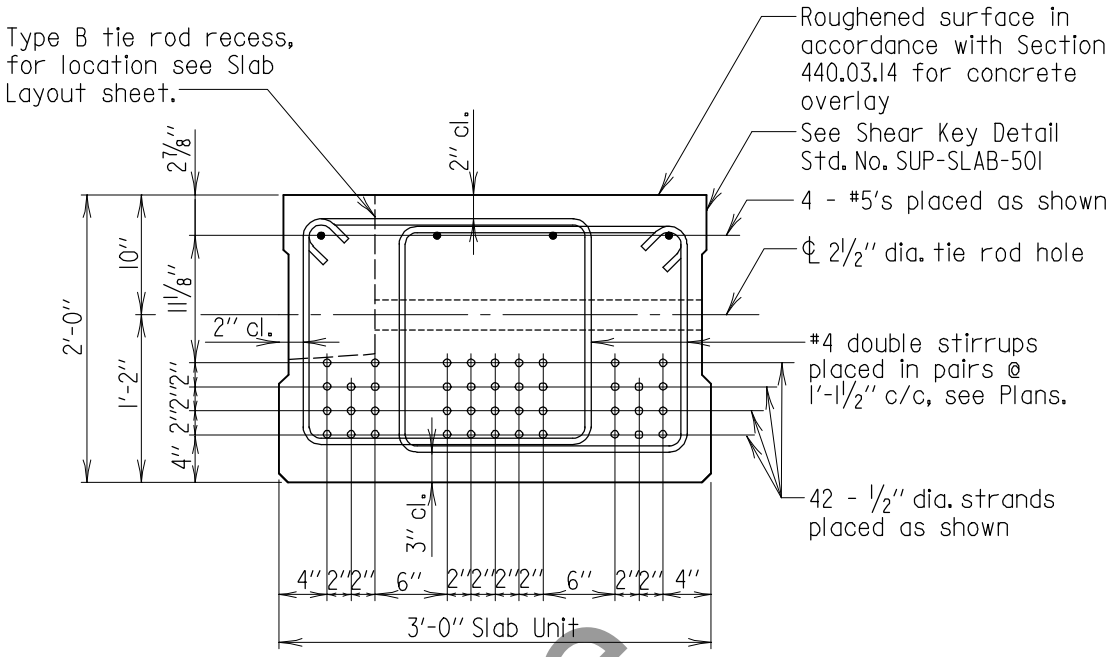

Note:
For location of tie rod holes, see contract plans.

SECTION - SLAB AT MIDSPAN
Scale: ¾" = 1'-0"

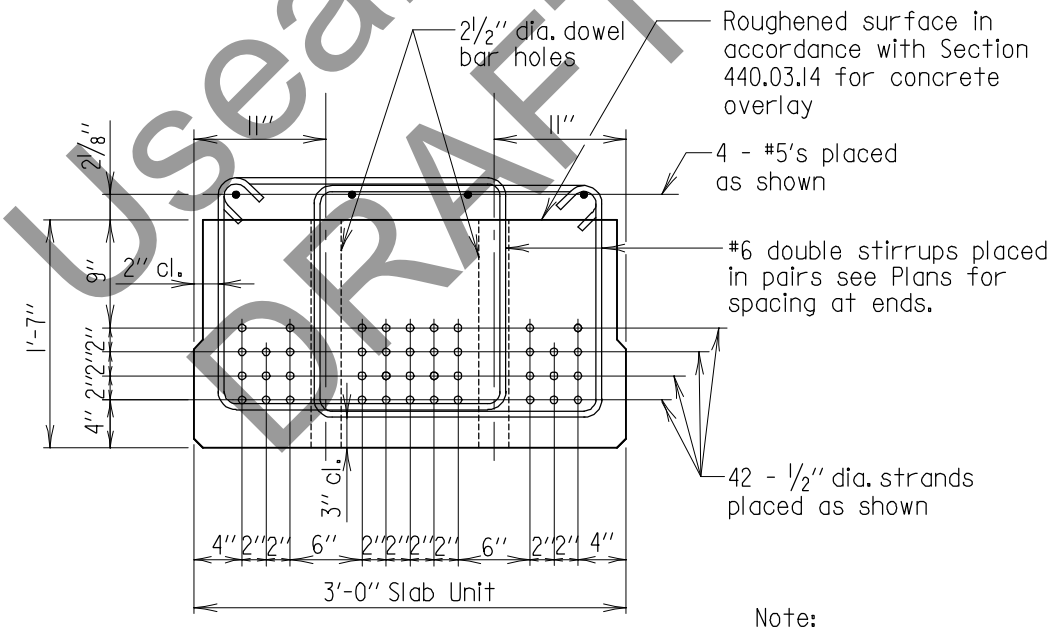

SECTION - SLAB AT ENDS
Scale: ¾" = 1'-0"

Note:
Any misplaced dowel bar holes or tie rod holes will be cause for rejection of the precast slab unit.

Useable DRAFT

* USEABLE DRAFT *

APPROVAL	
_____ DIRECTOR OFFICE OF STRUCTURES DATE: 09/01/15	
REVISIONS	
SHA	FHWA
FHWA APPROVAL	
DATE:	

STATE OF MARYLAND
DEPARTMENT OF TRANSPORTATION
STATE HIGHWAY ADMINISTRATION
OFFICE OF STRUCTURES

SIMPLE SPAN GREATER THAN 40'-0" TO 45'-0"
INTERIOR 3'-0" PRECAST CONCRETE SLAB PANEL SECTIONS

NO. SUP-SLAB(3FT)-601 SHEET 2 OF 2

SUPERSTRUCTURE SLABS

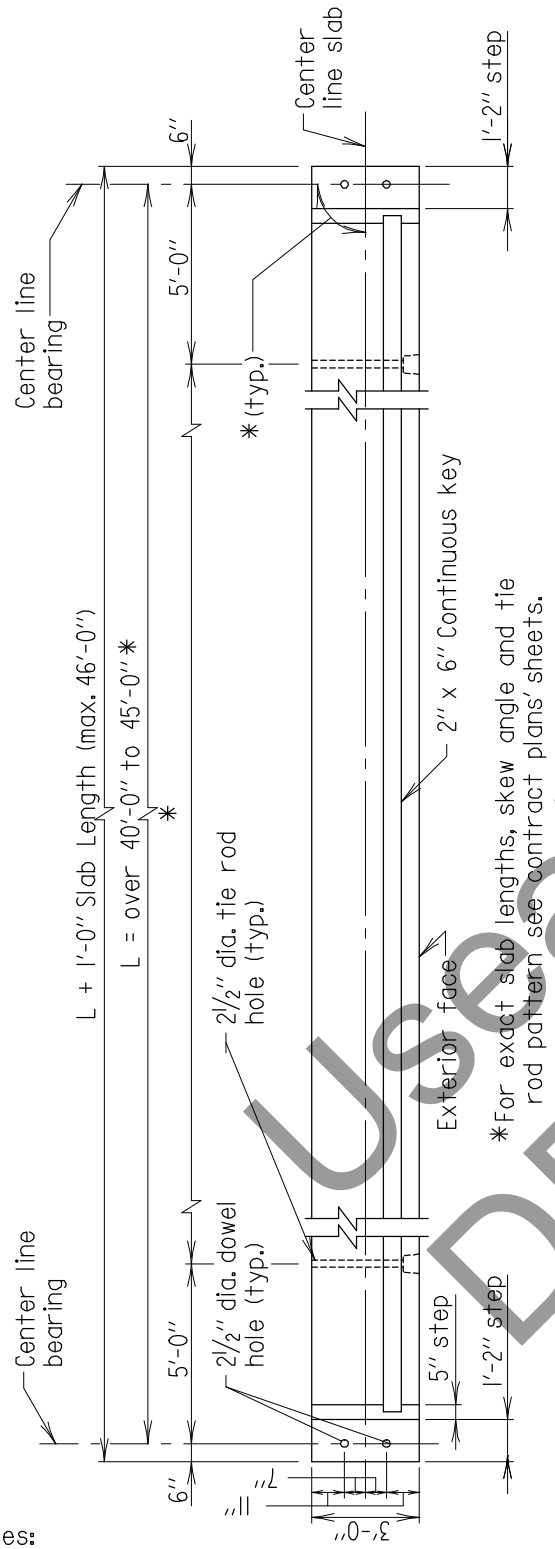

*For exact slab lengths, skew angle and tie rod pattern see contract plans' sheets.

Note:
Reinforcing steel at ends of slab and curb reinforcing not shown for clarity.

3'-0'' EXTERIOR SLAB PLAN
Scale: 3/16'' = 1'-0''

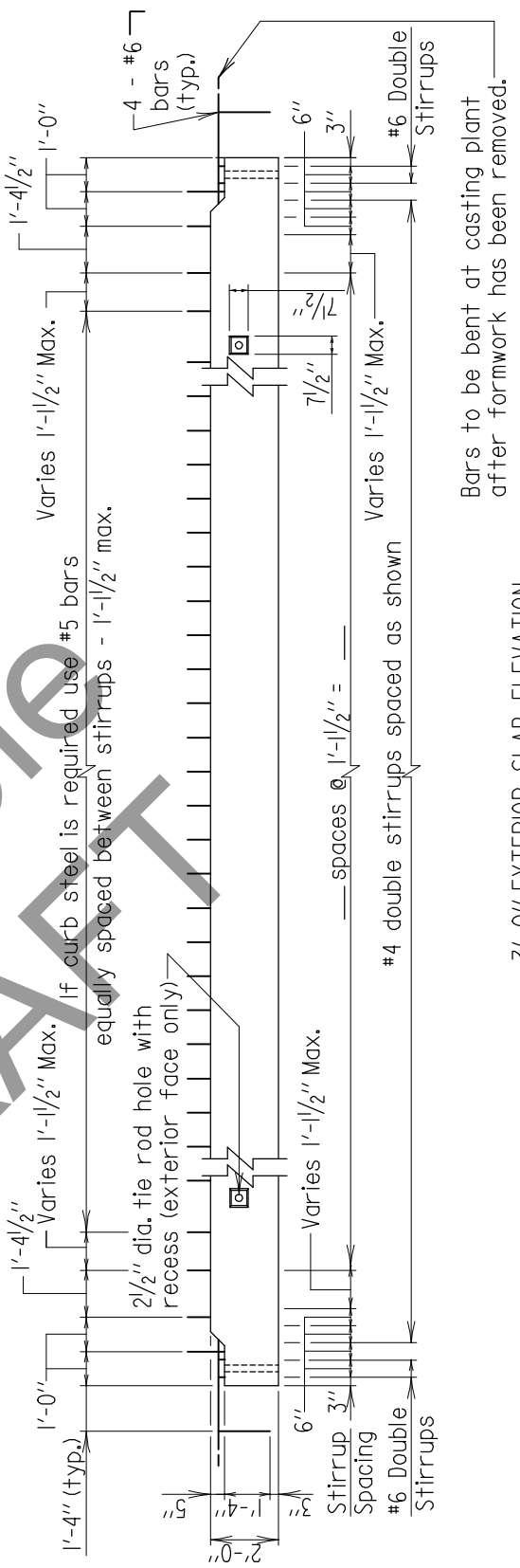

3'-0'' EXTERIOR SLAB ELEVATION
Scale: 3/16'' = 1'-0''

Note:
Stirrup spacing shown is for a 90° crossing. For bridges with other skew angles, see Std. No. SUP-SLAB(3FT)-603 for details of skewed ends.

Notes:

1. Extreme care shall be used in locating tie rod holes during the casting operation. Contractor shall assemble the slab units for the entire bridge width at the casting plant to ensure that there is no hole misalignment prior to shipping slab units to the site. Any misalignment of the holes will be cause for rejection of the slab unit. Drilling or coring of the slabs to create new or modified cast holes is prohibited.
2. Adjust curb rebar and stirrup spacing as needed to avoid tie rod hole and railing anchor bolts (if applicable).
3. All reinforcing steel to be epoxy coated.

Useable DRAFT

* USEABLE DRAFT *

APPROVAL	
_____ DIRECTOR OFFICE OF STRUCTURES	
DATE: 09/01/15	
REVISIONS	
SHA	FHWA

FHWA APPROVAL
DATE:

STATE OF MARYLAND
DEPARTMENT OF TRANSPORTATION
STATE HIGHWAY ADMINISTRATION
OFFICE OF STRUCTURES

SIMPLE SPAN GREATER THAN 40'-0'' TO 45'-0''
EXTERIOR 3'-0'' PRECAST CONCRETE SLAB PANEL
PLAN & ELEVATION

NO. SUP-SLAB(3FT)-602 SHEET 1 OF 2

SUPERSTRUCTURE SLABS

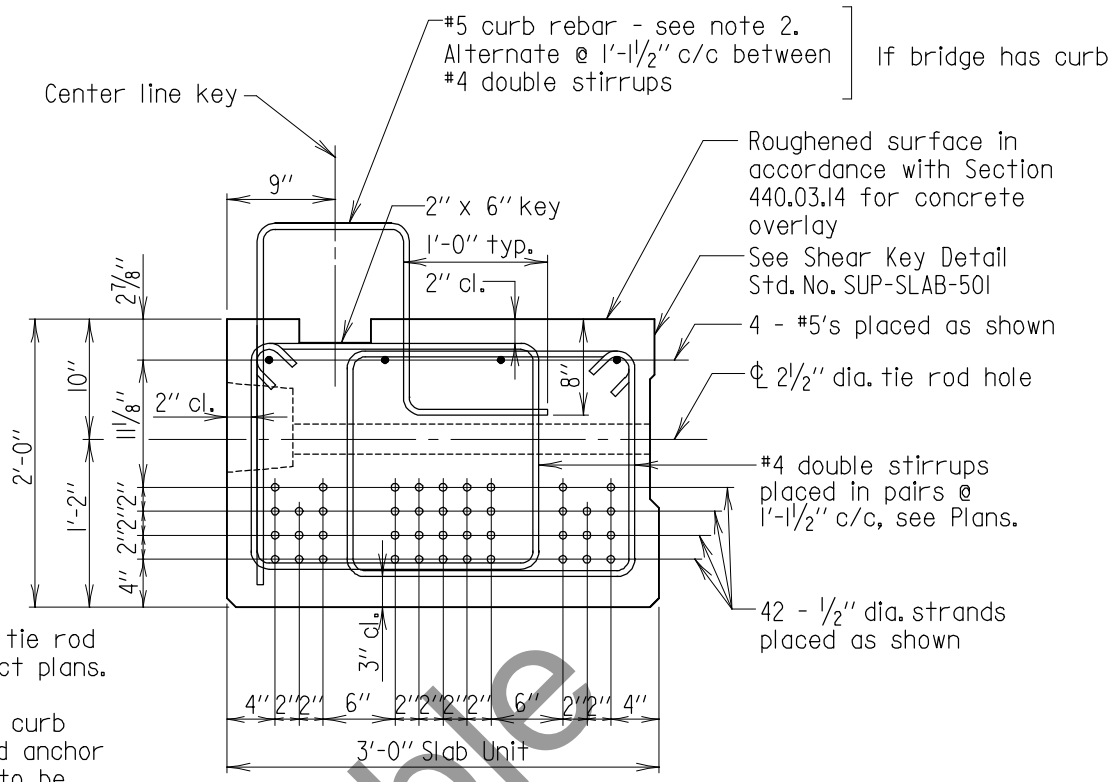

Notes:

1. For location of tie rod holes, see contract plans.

2. For location of curb reinforcement and anchor bolts and plates to be cast in slab for railing, see Std. No. SUP-TB(TR)-301

SECTION - SLAB AT MIDSPAN

Scale: ¾" = 1'-0"

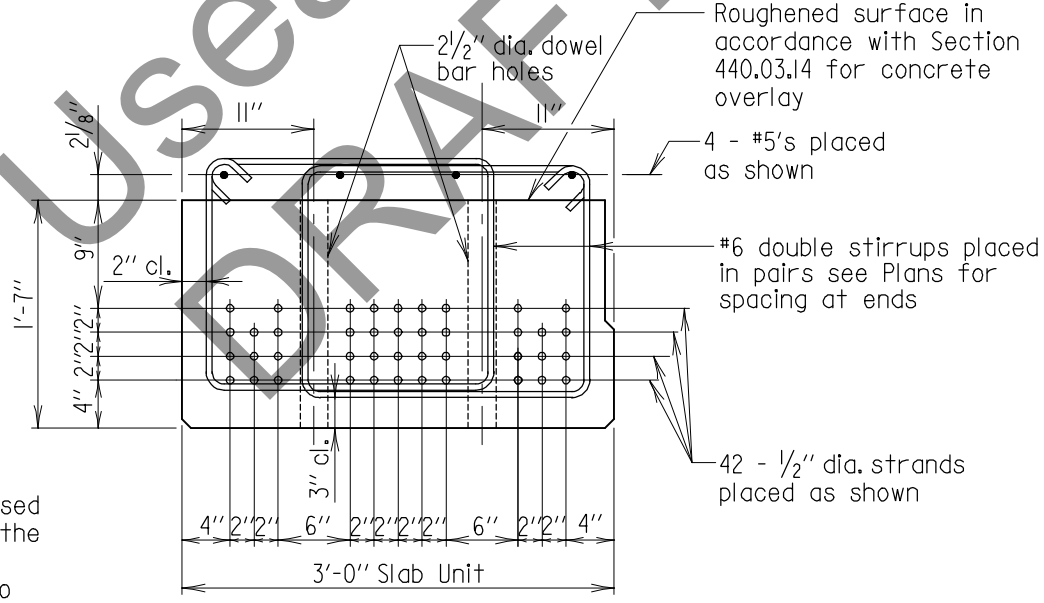

SECTION - SLAB AT ENDS

Scale: ¾" = 1'-0"

Note:
Extreme care shall be used when placing and tieing the curb rebar, railing and anchor bolts assembly to provide for the required clearances. Any misplaced rebar, dowel bar holes, tie rod holes or anchor bolts will be cause for rejection of the precast slab unit.

Useable DRAFT

* USEABLE DRAFT *

APPROVAL	
_____ DIRECTOR OFFICE OF STRUCTURES DATE: 09/01/15	
REVISIONS	
SHA	FHWA

FHWA APPROVAL
DATE:

STATE OF MARYLAND
DEPARTMENT OF TRANSPORTATION
STATE HIGHWAY ADMINISTRATION
OFFICE OF STRUCTURES

SIMPLE SPAN GREATER THAN 40'-0" TO 45'-0"
EXTERIOR 3'-0" PRECAST CONCRETE SLAB PANEL SECTIONS

NO. SUP-SLAB(3FT)-602 SHEET 2 OF 2

SUPERSTRUCTURE SLABS

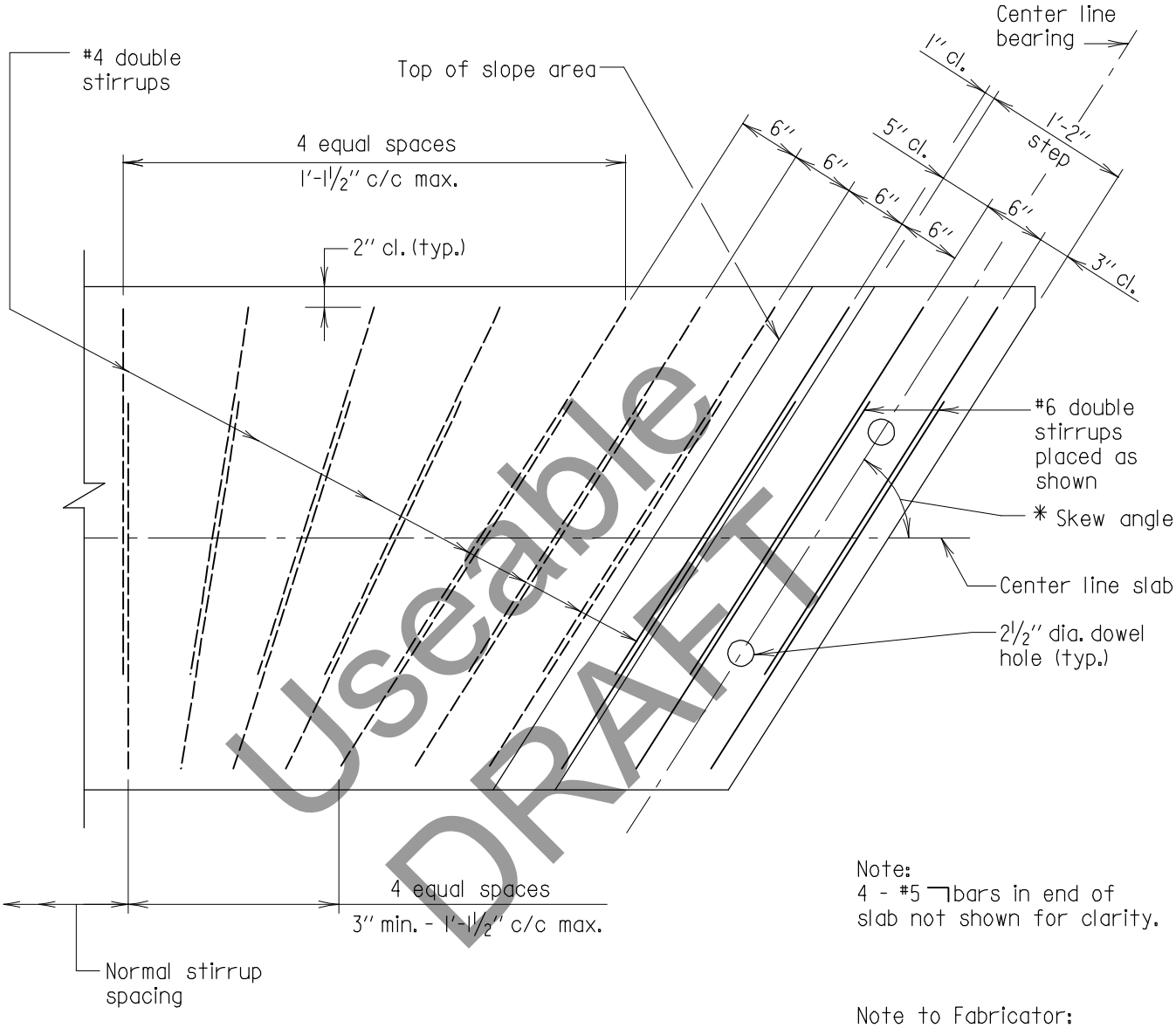

Useable DRAFT

Note:
4 - #5 ⌐bars in end of slab not shown for clarity.

*For exact skew angle, see contract plan sheets.

PLAN
Scale: ¾" = 1'-0"

Note to Fabricator:
End stirrup spacing must be laid out to determine spacing.

Note to Designer:
Layout shown works up to a skew angle of 55°. For angles less than 55° designer must layout skewed end detail on plans.

* USEABLE DRAFT *

Note:
All reinforcing steel to be epoxy coated.

APPROVAL	
_____ DIRECTOR OFFICE OF STRUCTURES DATE: 09/01/15	
REVISIONS	
SHA	FHWA
FHWA APPROVAL	
DATE:	

STATE OF MARYLAND
DEPARTMENT OF TRANSPORTATION
STATE HIGHWAY ADMINISTRATION
OFFICE OF STRUCTURES

SIMPLE SPAN GREATER THAN 40'-0" TO 45'-0"
INTERIOR 3'-0" PRECAST CONCRETE SLAB PANEL
SKEWED END DETAIL

NO. SUP-SLAB(3FT)-603 SHEET 1 OF 2

SUPERSTRUCTURE SLABS

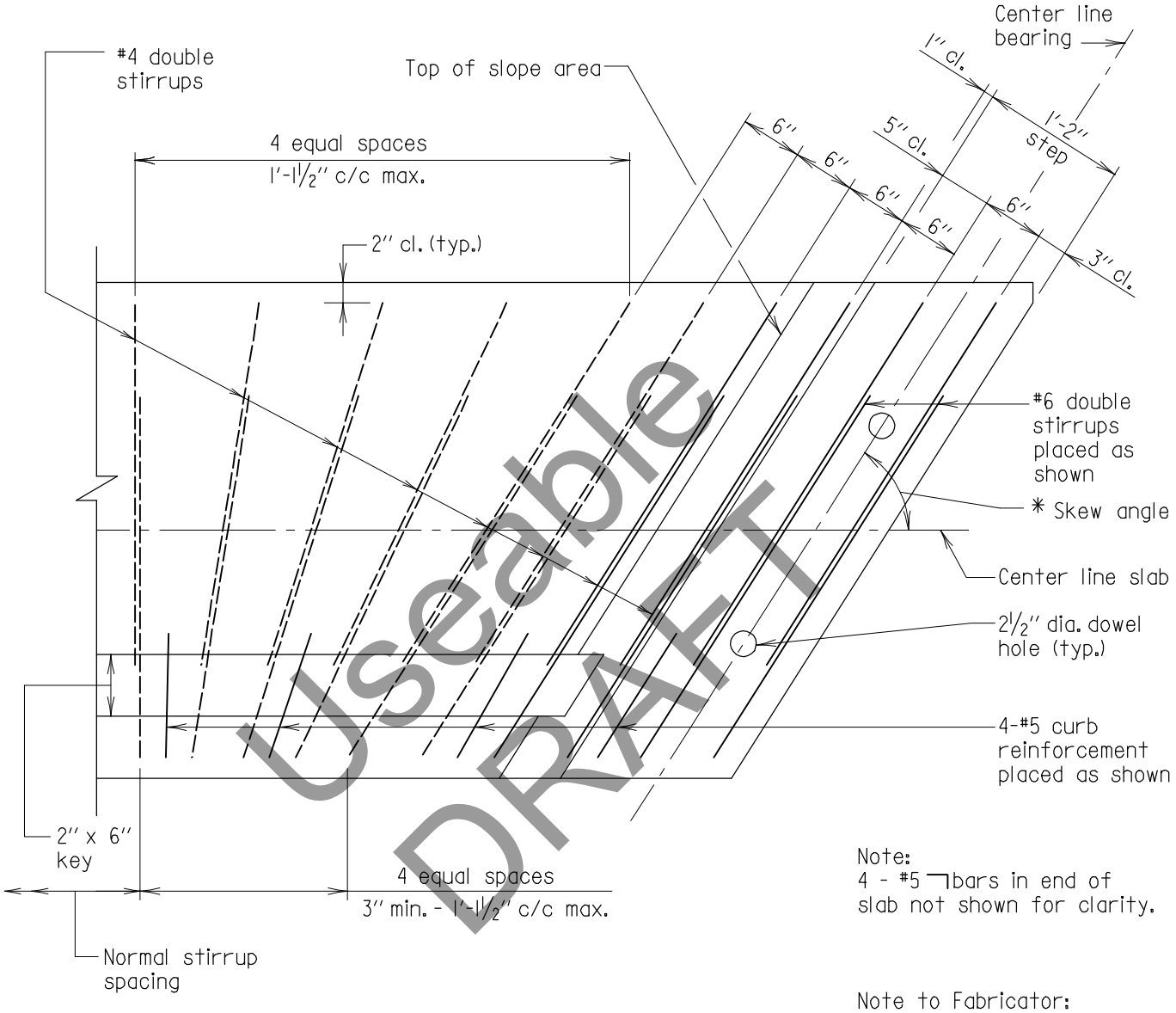

Useable DRAFT

Note:
4 - #5 ⌉bars in end of slab not shown for clarity.

*For exact skew angle, see contract plan sheets.

PLAN
Scale: ¾" = 1'-0"

Note to Fabricator:
End stirrup spacing must be laid out to determine spacing.

Note to Designer:
Layout shown works up to a skew angle of 55°. For angles less than 55° designer must layout skewed end detail on plans.

* USEABLE DRAFT *

Note:
All reinforcing steel to be epoxy coated.

APPROVAL	
_____ DIRECTOR OFFICE OF STRUCTURES DATE: 09/01/15	
REVISIONS	
SHA	FHWA
FHWA APPROVAL	
DATE:	

STATE OF MARYLAND
DEPARTMENT OF TRANSPORTATION
STATE HIGHWAY ADMINISTRATION
OFFICE OF STRUCTURES

SIMPLE SPAN GREATER THAN 40'-0" TO 45'-0"
EXTERIOR 3'-0" PRECAST CONCRETE SLAB PANEL
SKEWED END DETAIL

NO. SUP-SLAB(3FT)-603 SHEET 2 OF 2

SUPERSTRUCTURE SLABS

Notes:

1. Extreme care shall be used in locating tie rod holes during the casting operation. Contractor shall assemble the slab units for the entire bridge width at the casting plant to ensure that there is no hole misalignment prior to shipping slab units to the site. Any misalignment of the holes will be cause for rejection of the slab unit. Drilling or coring of the slabs to create new or modified cast holes is prohibited.
2. Adjust curb rebar and stirrup spacing as needed to avoid tie rod hole and railing anchor bolts (if applicable).
3. All reinforcing steel to be epoxy coated.

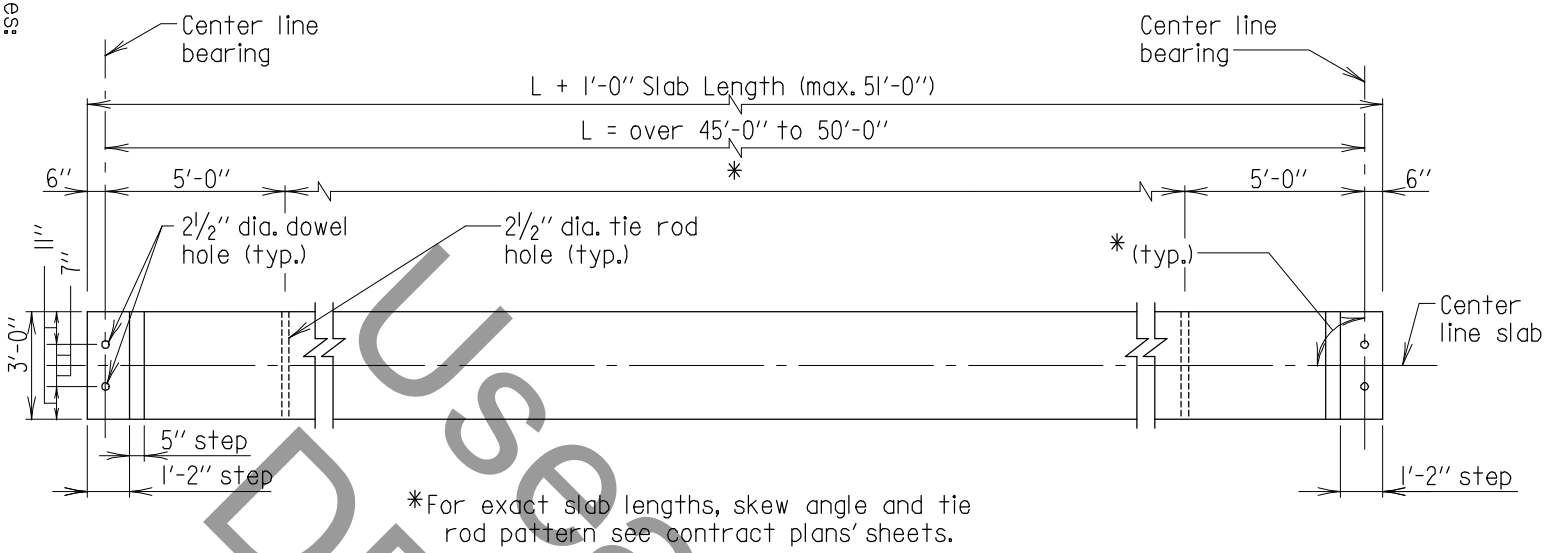

*For exact slab lengths, skew angle and tie rod pattern see contract plans' sheets.

Note:
Stirrup spacing shown is for a 90° crossing. For bridges with other skew angles, see Std. No. SUP-SLAB(3FT)-703 for details of skewed ends.

3'-0" INTERIOR SLAB PLAN
Scale: 3/16" = 1'-0"

Note:
Reinforcing steel at ends of slab not shown for clarity.

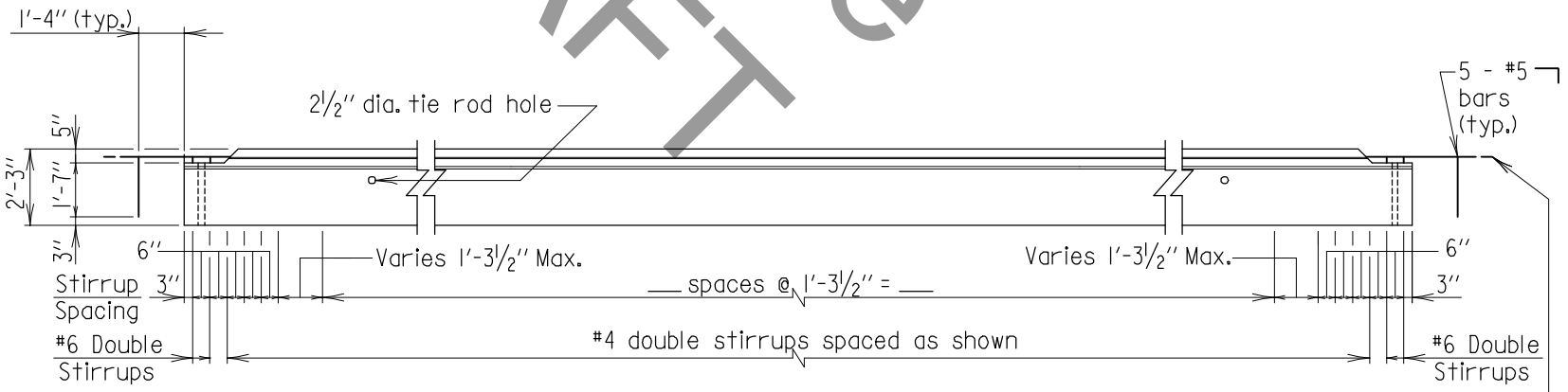

Bars to be bent at casting plant after formwork has been removed.

3'-0" INTERIOR SLAB ELEVATION
Scale: 3/16" = 1'-0"

Useable DRAFT

APPROVAL	
OFFICE OF STRUCTURES DIRECTOR	
DATE: 09/01/15	
REVISIONS	
SHA	FHWA
FHWA APPROVAL	
DATE:	

STATE OF MARYLAND
DEPARTMENT OF TRANSPORTATION
STATE HIGHWAY ADMINISTRATION
OFFICE OF STRUCTURES

SIMPLE SPAN GREATER THAN 45'-0" TO 50'-0"
INTERIOR 3'-0" PRECAST CONCRETE SLAB PANEL
PLAN & ELEVATION

NO. SUP-SLAB(3FT)-701 SHEET 1 OF 2

* USEABLE DRAFT *

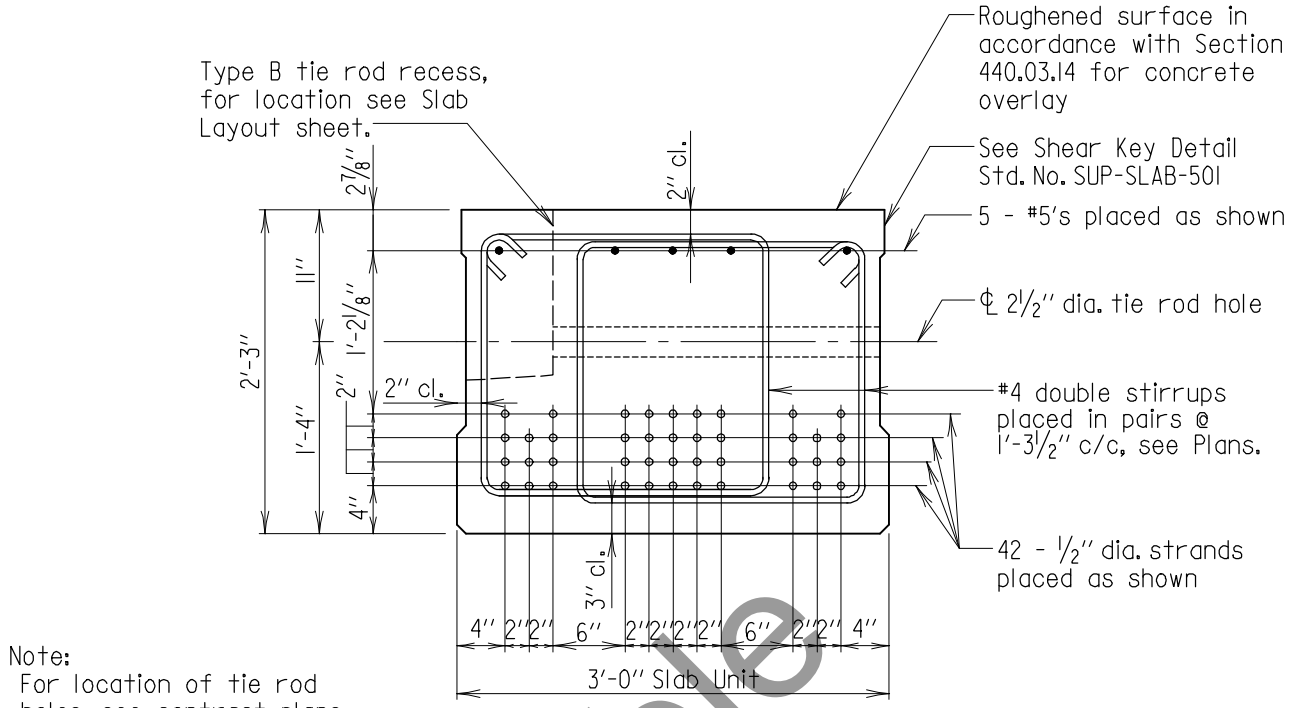

Note:
For location of tie rod holes, see contract plans.

SECTION - SLAB AT MIDSPAN
Scale: ¾" = 1'-0"

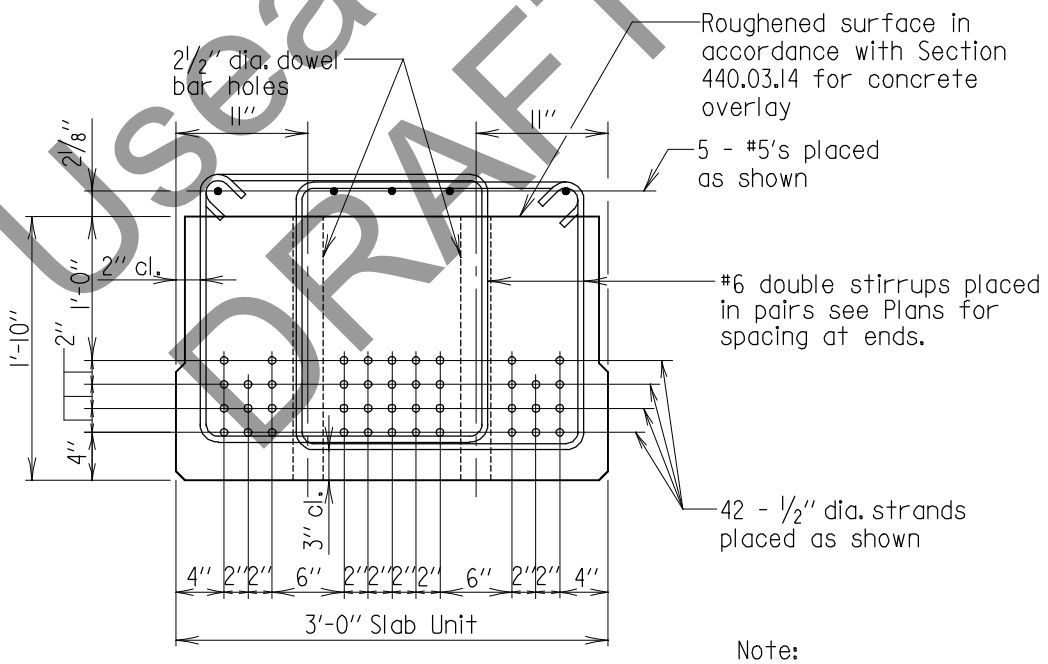

SECTION - SLAB AT ENDS
Scale: ¾" = 1'-0"

Note:
Any misplaced dowel bar holes or tie rod holes will be cause for rejection of the precast slab unit.

Useable DRAFT

* USEABLE DRAFT *

APPROVAL	
_____ DIRECTOR OFFICE OF STRUCTURES DATE: 09/01/15	
REVISIONS	
SHA	FHWA
FHWA APPROVAL	
DATE:	

STATE OF MARYLAND
DEPARTMENT OF TRANSPORTATION
STATE HIGHWAY ADMINISTRATION
OFFICE OF STRUCTURES

SIMPLE SPAN GREATER THAN 45'-0" TO 50'-0"
INTERIOR 3'-0" PRECAST CONCRETE SLAB PANEL SECTIONS

STANDARD NO. SUP-SLAB(3FT)-701 SHEET 2 OF 2

SUPERSTRUCTURE SLABS

Notes:

1. Extreme care shall be used in locating tie rod holes during the casting operation. Contractor shall assemble the slab units for the entire bridge width at the casting plant to ensure that there is no hole misalignment prior to shipping slab units to the site. Any misalignment of the holes will be cause for rejection of the slab unit. Drilling or coring of the slabs to create new or modified cast holes is prohibited.
2. Adjust curb rebar and stirrup spacing as needed to avoid tie rod hole and railing anchor bolts (if applicable).
3. All reinforcing steel to be epoxy coated.

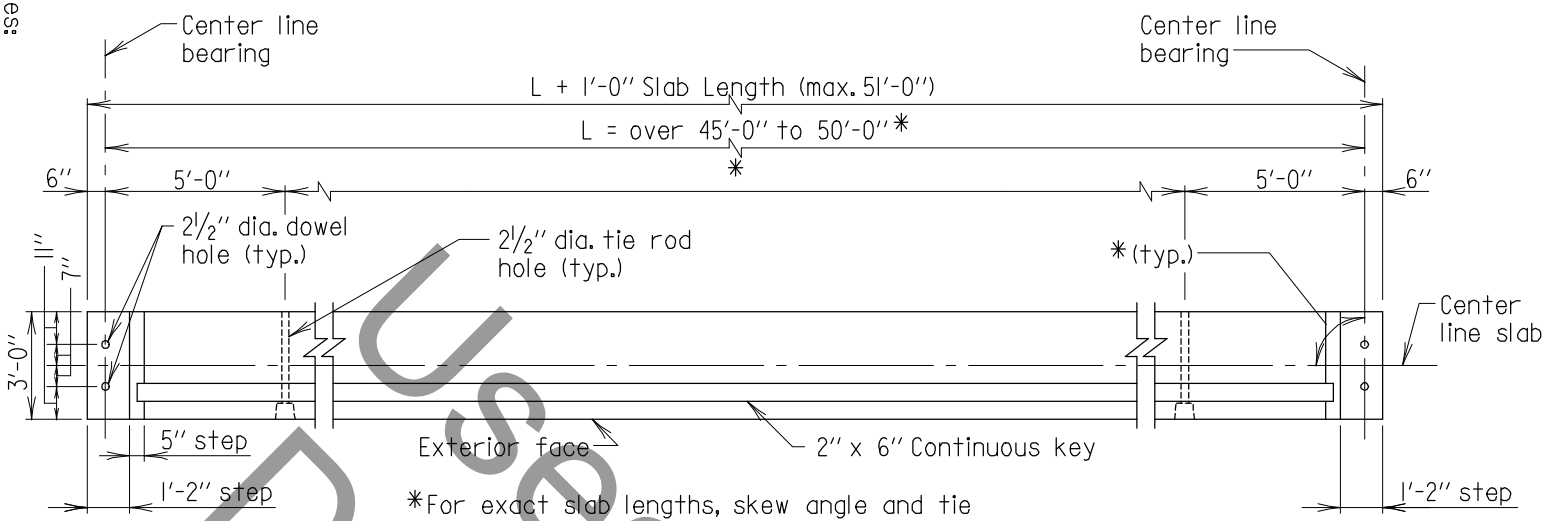

*For exact slab lengths, skew angle and tie rod pattern see contract plans' sheets.

Note:
Stirrup spacing shown is for a 90° crossing. For bridges with other skew angles, see Std. No. SUP-SLAB(3FT)-703 for details of skewed ends.

3'-0" EXTERIOR SLAB PLAN
Scale: 3/16" = 1'-0"

Note:
Reinforcing steel at ends of slab and curb reinforcing not shown for clarity.

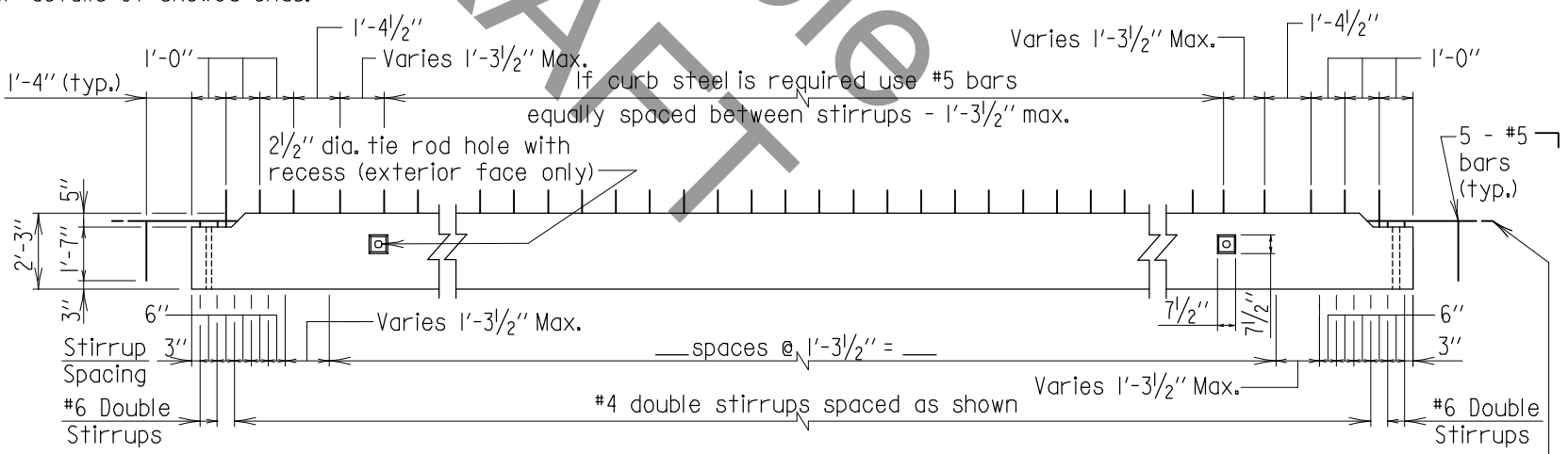

3'-0" EXTERIOR SLAB ELEVATION
Scale: 3/16" = 1'-0"

Usable DRAFT

FHWA APPROVAL
DATE:

APPROVAL
DIRECTOR OFFICE OF STRUCTURES
DATE: 09/01/15

REVISIONS
SHA
FHWA

STATE OF MARYLAND
DEPARTMENT OF TRANSPORTATION
STATE HIGHWAY ADMINISTRATION
OFFICE OF STRUCTURES

SIMPLE SPAN GREATER THAN 45'-0" TO 50'-0"
EXTERIOR 3'-0" PRECAST CONCRETE SLAB PANEL
PLAN & ELEVATION

NO. SUP-SLAB(3FT)-702

SHEET 1 OF 2

* USEABLE DRAFT *

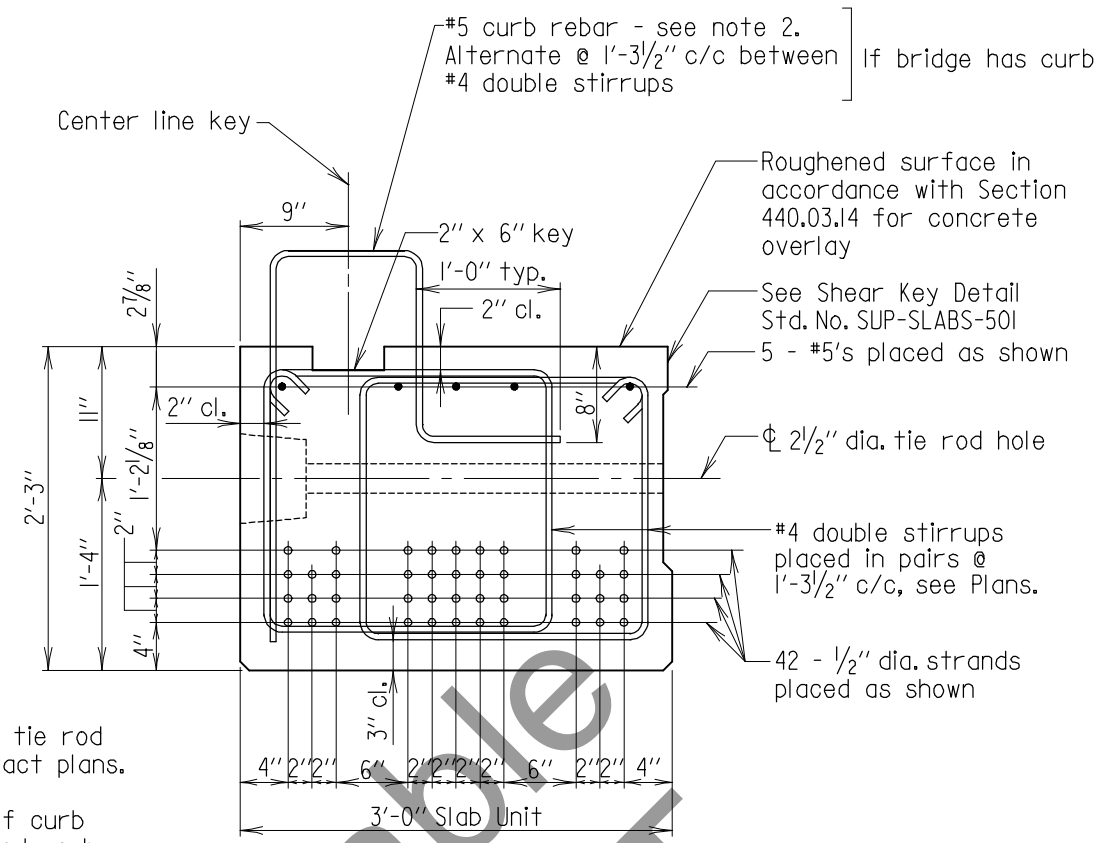

Notes:

1. For location of tie rod holes, see contract plans.

2. For location of curb reinforcement and anchor bolts and plates to be cast in slab for railing, see Std. No. SUP-TB(TR)-301

SECTION - SLAB AT MIDSPAN

Scale: ¾" = 1'-0"

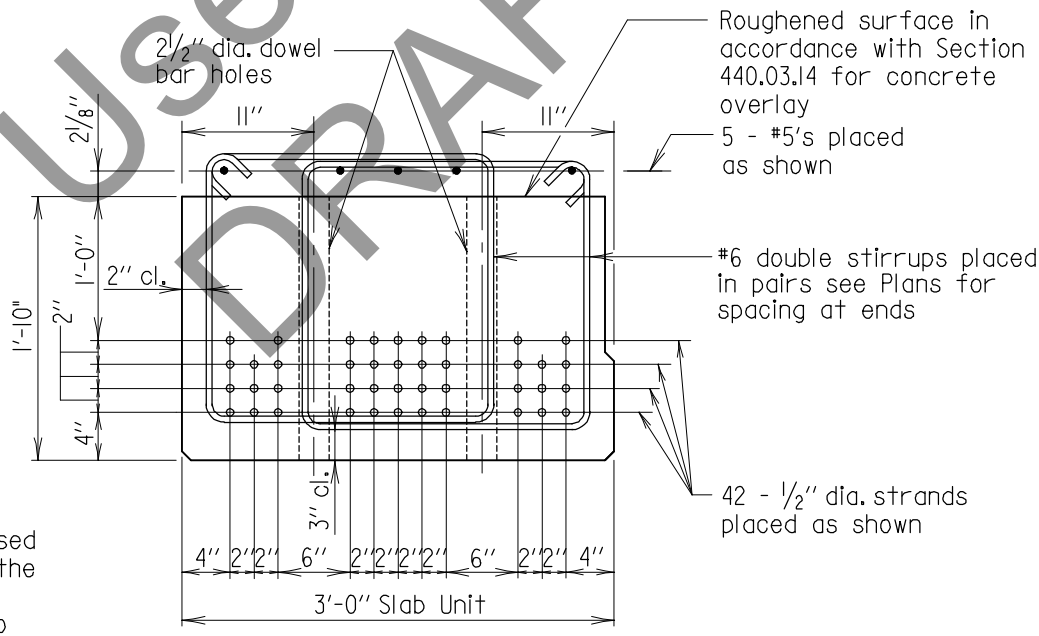

SECTION - SLAB AT ENDS

Scale: ¾" = 1'-0"

Note:
Extreme care shall be used when placing and tieing the curb rebar, railing and anchor bolts assembly to provide for the required clearances. Any misplaced rebar, dowel bar holes, tie rod holes or anchor bolts will be cause for rejection of the precast slab unit.

Useable DRAFT

* USEABLE DRAFT *

APPROVAL	
_____ DIRECTOR OFFICE OF STRUCTURES DATE: 09/01/15	
REVISIONS	
SHA	FHWA
FHWA APPROVAL	
DATE:	

STATE OF MARYLAND
DEPARTMENT OF TRANSPORTATION
STATE HIGHWAY ADMINISTRATION
OFFICE OF STRUCTURES

SIMPLE SPAN GREATER THAN 45'-0" TO 50'-0"
EXTERIOR 3'-0" PRECAST CONCRETE SLAB PANEL SECTIONS

NO. SUP-SLAB(3FT)-702 SHEET 2 OF 2

SUPER CONCRETE WORK

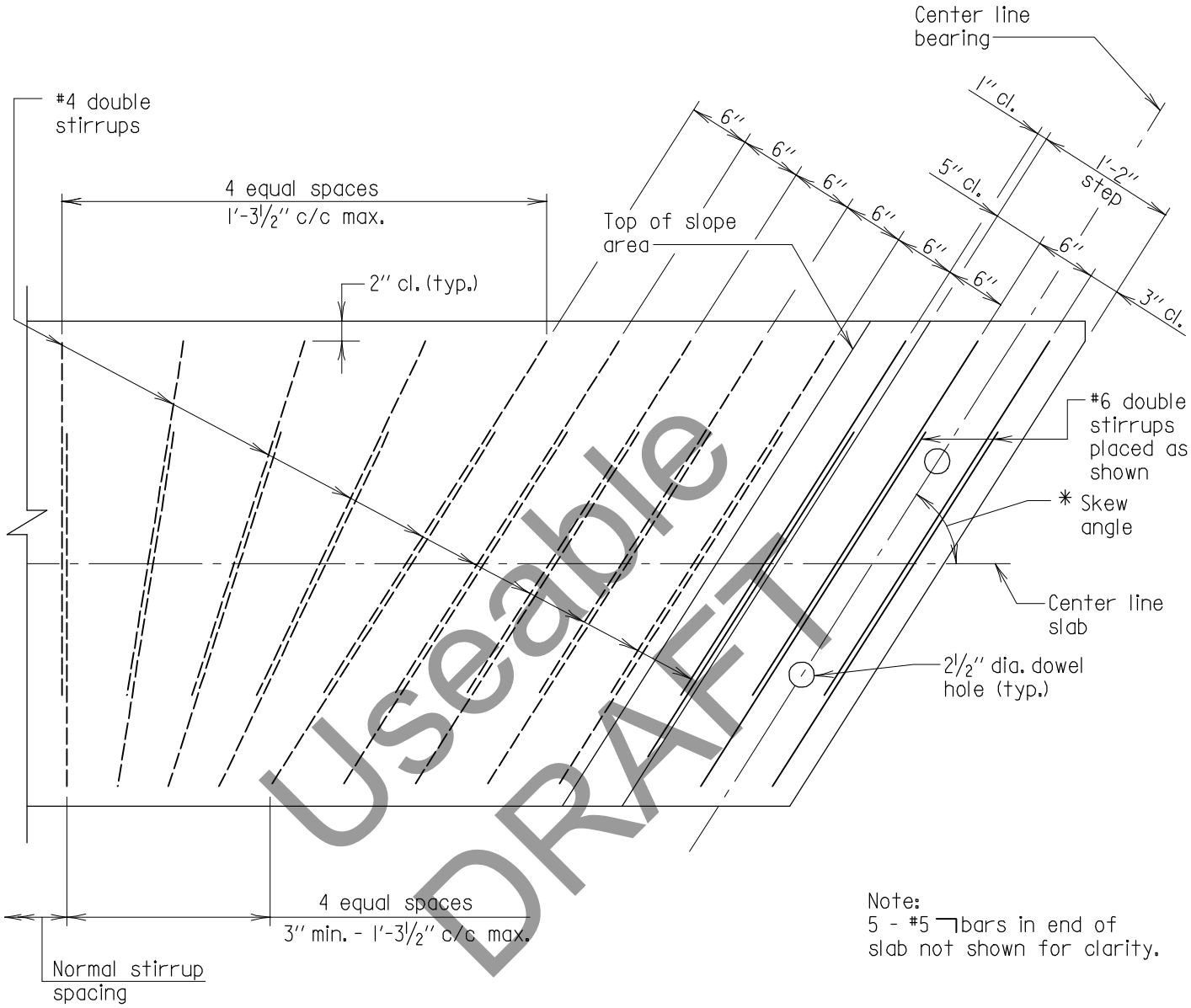

Useable DRAFT

Note:
5 - #5 ⌉bars in end of slab not shown for clarity.

Note to Fabricator:
End stirrup spacing must be laid out to determine spacing.

Note to Designer:
Layout shown works up to a skew angle of 55°. For angles less than 55° designer must layout skewed end detail on plans.

*For exact skew angle, see contract plan sheets.

PLAN
Scale: 3/4'' = 1'-0''

Note:
All reinforcing steel to be epoxy coated.

* USEABLE DRAFT *

APPROVAL	
_____ DIRECTOR OFFICE OF STRUCTURES DATE: 09/01/15	
REVISIONS	
SHA	FHWA
FHWA APPROVAL	
DATE:	

STATE OF MARYLAND
DEPARTMENT OF TRANSPORTATION
STATE HIGHWAY ADMINISTRATION
OFFICE OF STRUCTURES

SIMPLE SPAN GREATER THAN 45'-0'' TO 50'-0''
INTERIOR 3'-0'' PRECAST CONCRETE SLAB PANEL
SKEWED END DETAIL

NO. SUP-SLAB(3FT)-703 SHEET 1 OF 2

SUPERSTRUCTURE SLABS

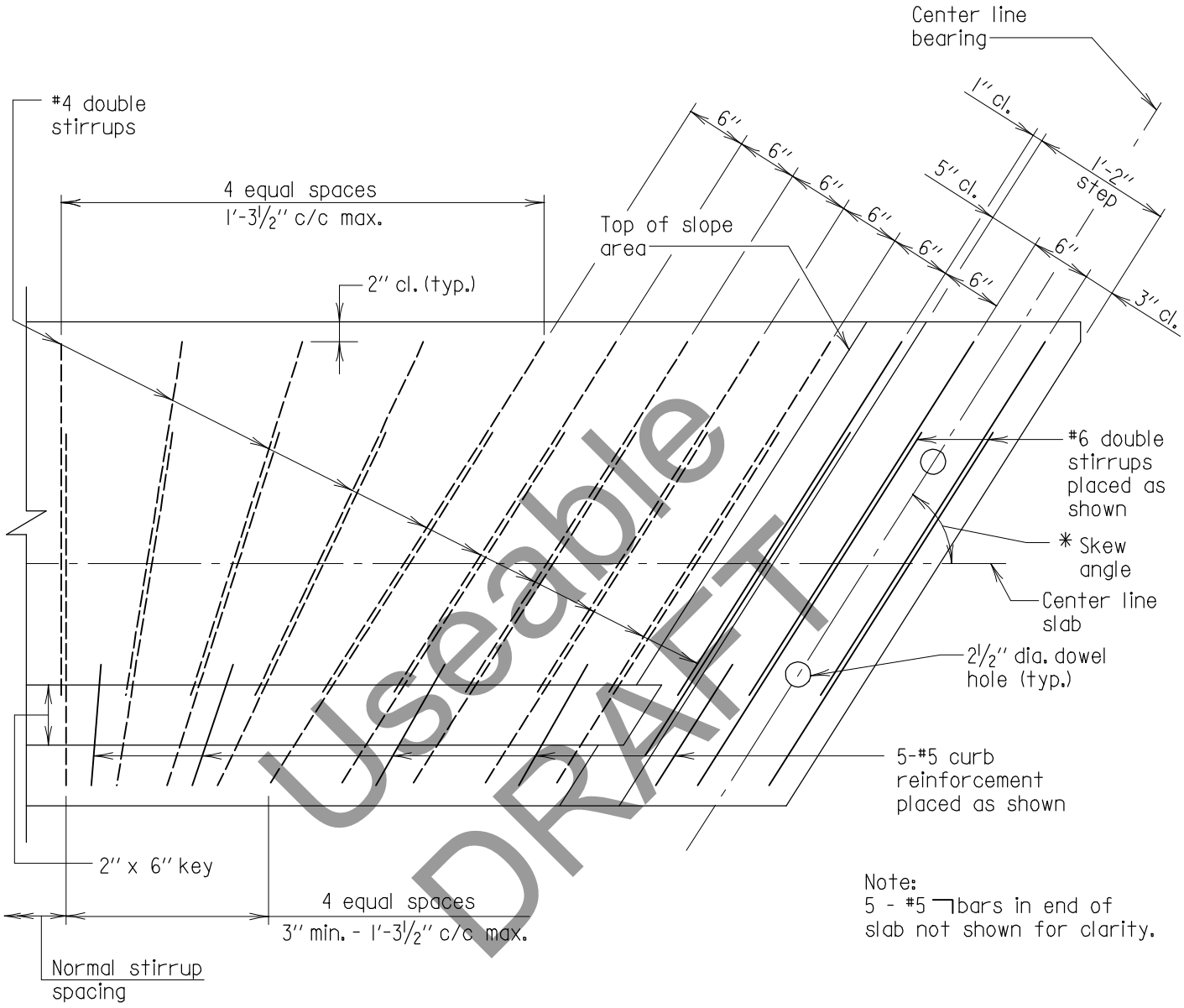

Useable DRAFT

Note:
5 - #5 ⌉bars in end of slab not shown for clarity.

Note to Fabricator:
End stirrup spacing must be laid out to determine spacing.

*For exact skew angle, see contract plan sheets.

PLAN
Scale: ¾" = 1'-0"

Note to Designer:
Layout shown works up to a skew angle of 55°. For angles less than 55° designer must layout skewed end detail on plans.

* USEABLE DRAFT *

Note:
All reinforcing steel to be epoxy coated.

APPROVAL	
_____ DIRECTOR OFFICE OF STRUCTURES DATE: 09/01/15	
REVISIONS	
SHA	FHWA

FHWA APPROVAL	
DATE:	

STATE OF MARYLAND
DEPARTMENT OF TRANSPORTATION
STATE HIGHWAY ADMINISTRATION
OFFICE OF STRUCTURES

SIMPLE SPAN GREATER THAN 45'-0" TO 50'-0"
EXTERIOR 3'-0" PRECAST CONCRETE SLAB PANEL
SKEWED END DETAIL

NO. SUP-SLAB(3FT)-703 SHEET 2 OF 2

SUPERSTRUCTURE SLABS

Notes:

1. Extreme care shall be used in locating tie rod holes during the casting operation. Contractor shall assemble the slab units for the entire bridge width at the casting plant to ensure that there is no hole misalignment prior to shipping slab units to the site. Any misalignment of the holes will be cause for rejection of the slab unit. Drilling or coring of the slabs to create new or modified cast holes is prohibited.
2. Adjust curb rebar and stirrup spacing as needed to avoid tie rod hole and railing anchor bolts (if applicable).
3. All reinforcing steel to be epoxy coated.

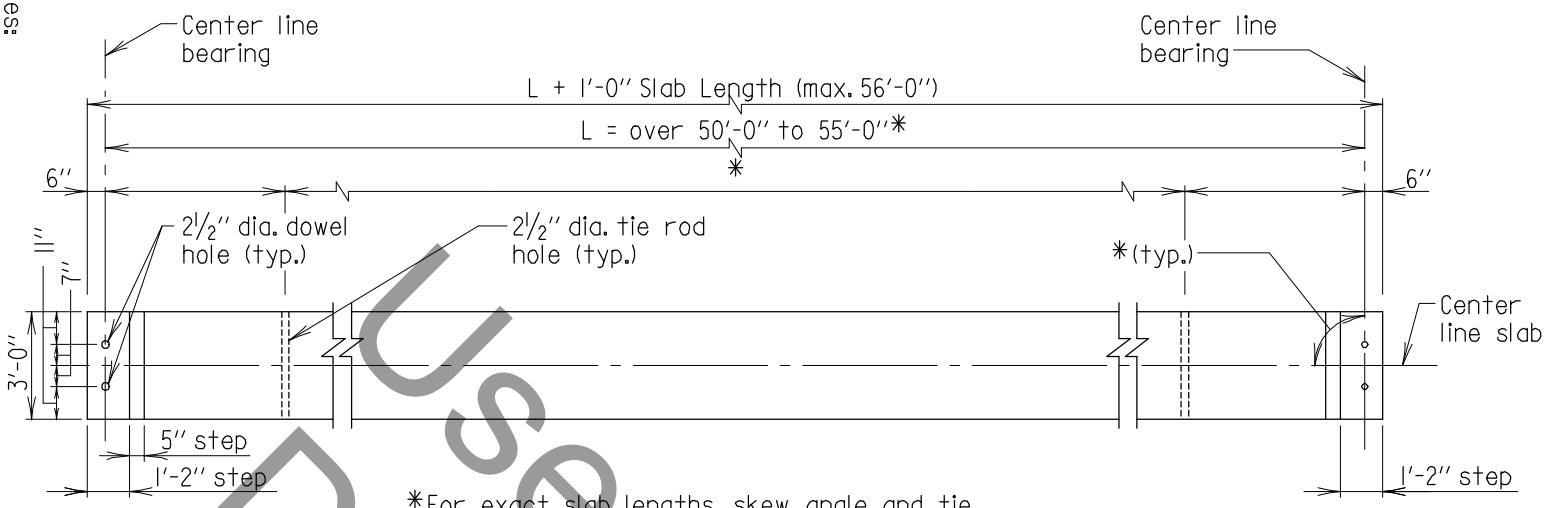

*For exact slab lengths, skew angle and tie rod pattern see contract plans' sheets.

Note:
Stirrup spacing shown is for a 90° crossing. For bridges with other skew angles, see Std. No. SUP-SLAB(3FT)-803 for details of skewed ends.

3'-0" INTERIOR SLAB PLAN
Scale: 3/16" = 1'-0"

Note:
Reinforcing steel at ends of slab not shown for clarity.

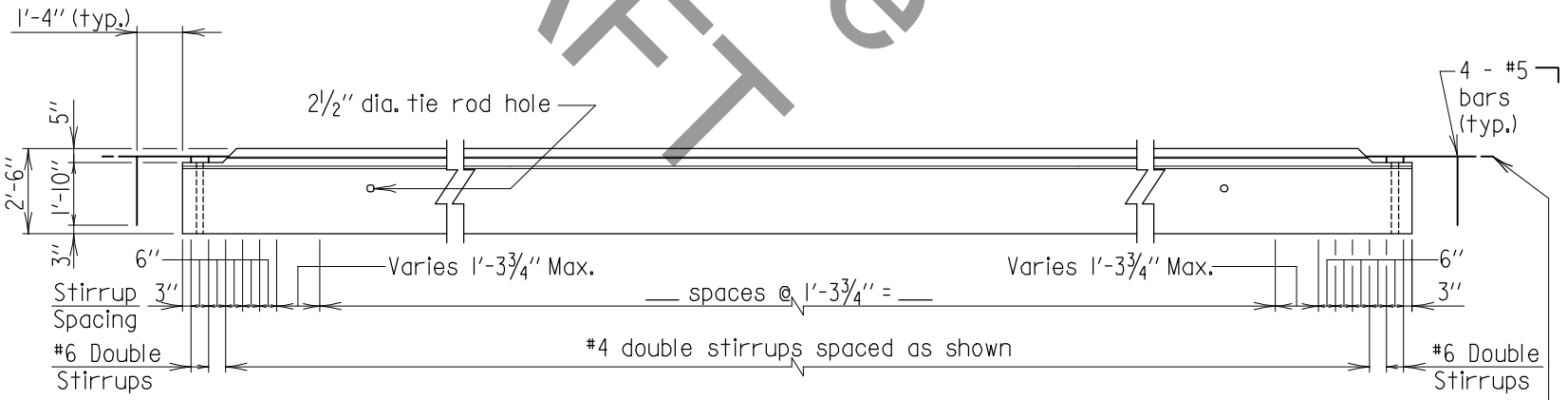

3'-0" INTERIOR SLAB ELEVATION
Scale: 3/16" = 1'-0"

Useable DRAFT

APPROVAL	
OFFICE OF STRUCTURES DIRECTOR	
DATE: 09/01/15	
REVISIONS	
SHA	FHWA
FHWA APPROVAL	
DATE:	

STATE OF MARYLAND
DEPARTMENT OF TRANSPORTATION
STATE HIGHWAY ADMINISTRATION
OFFICE OF STRUCTURES

SIMPLE SPAN GREATER THAN 50'-0" TO 55'-0"
INTERIOR 3'-0" PRECAST CONCRETE SLAB PANEL
PLAN & ELEVATION

NO. SUP-SLAB(3FT)-801 SHEET 1 OF 2

* USEABLE DRAFT *

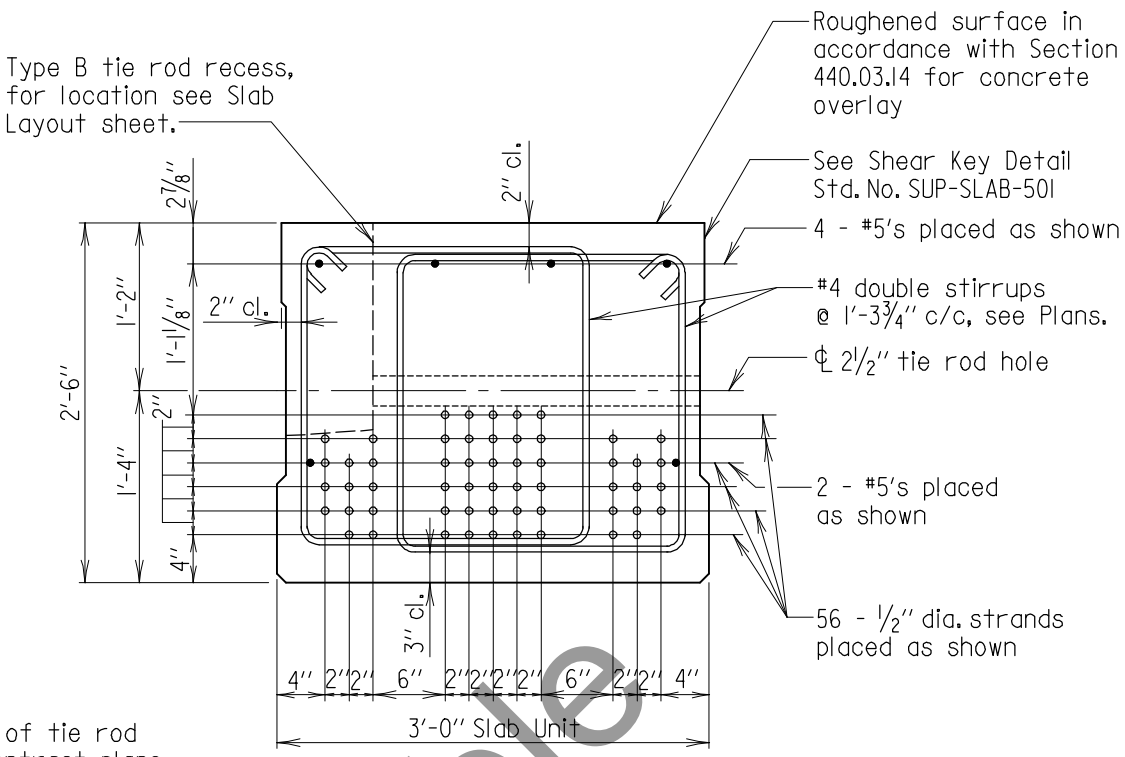

Note:
For location of tie rod holes, see contract plans.

SECTION - SLAB AT MIDSPAN
Scale: 3/4" = 1'-0"

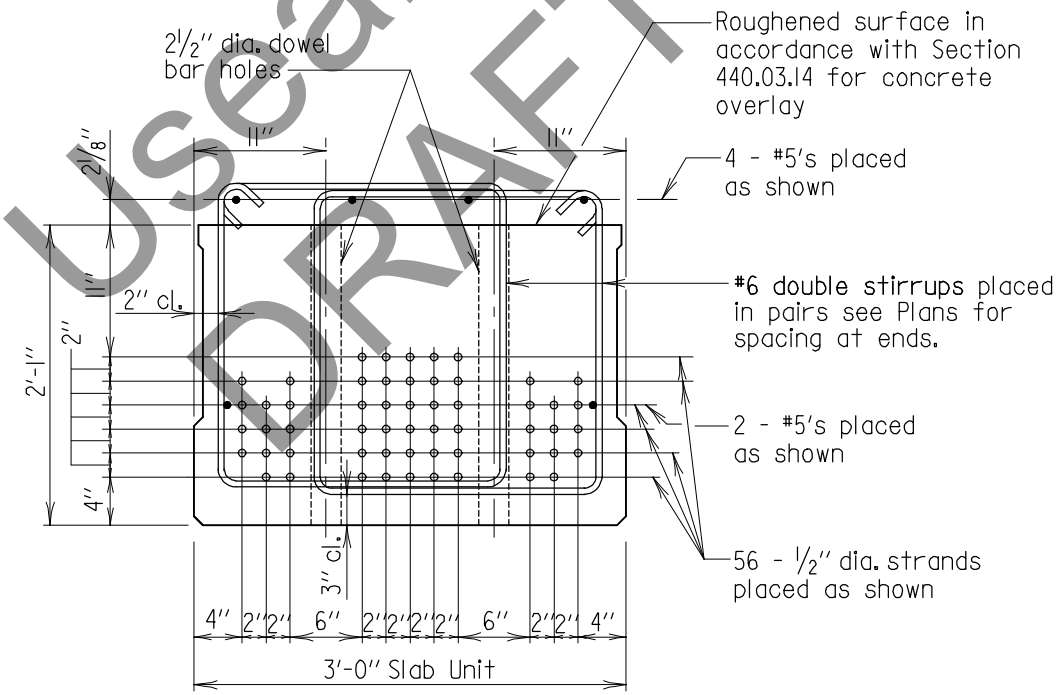

Note:
Any misplaced dowel bar holes or tie rod holes will be cause for rejection of the precast slab unit.

SECTION - SLAB AT ENDS
Scale: 3/4" = 1'-0"

Useable DRAFT

* USEABLE DRAFT *

APPROVAL	
_____ DIRECTOR OFFICE OF STRUCTURES DATE: 09/01/15	
REVISIONS	
SHA	FHWA
FHWA APPROVAL	
DATE:	

STATE OF MARYLAND
DEPARTMENT OF TRANSPORTATION
STATE HIGHWAY ADMINISTRATION
OFFICE OF STRUCTURES

SIMPLE SPAN GREATER THAN 50'-0" TO 55'-0"
INTERIOR 3'-0" PRECAST CONCRETE SLAB PANEL SECTIONS

NO. SUP-SLAB(3FT)-801 SHEET 2 OF 2

SUPERSTRUCTURE SLABS

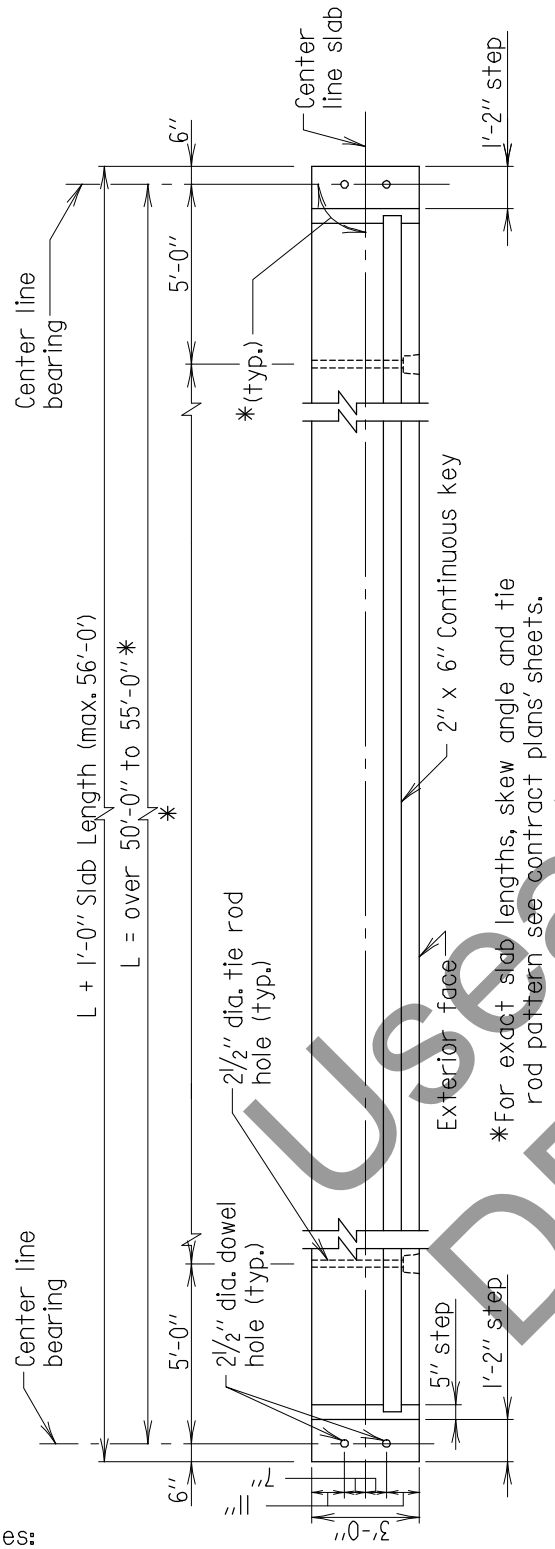

3'-0'' EXTERIOR SLAB PLAN
Scale: 3/16'' = 1'-0''

Note:
Reinforcing steel at ends of slab and curb reinforcing not shown for clarity.

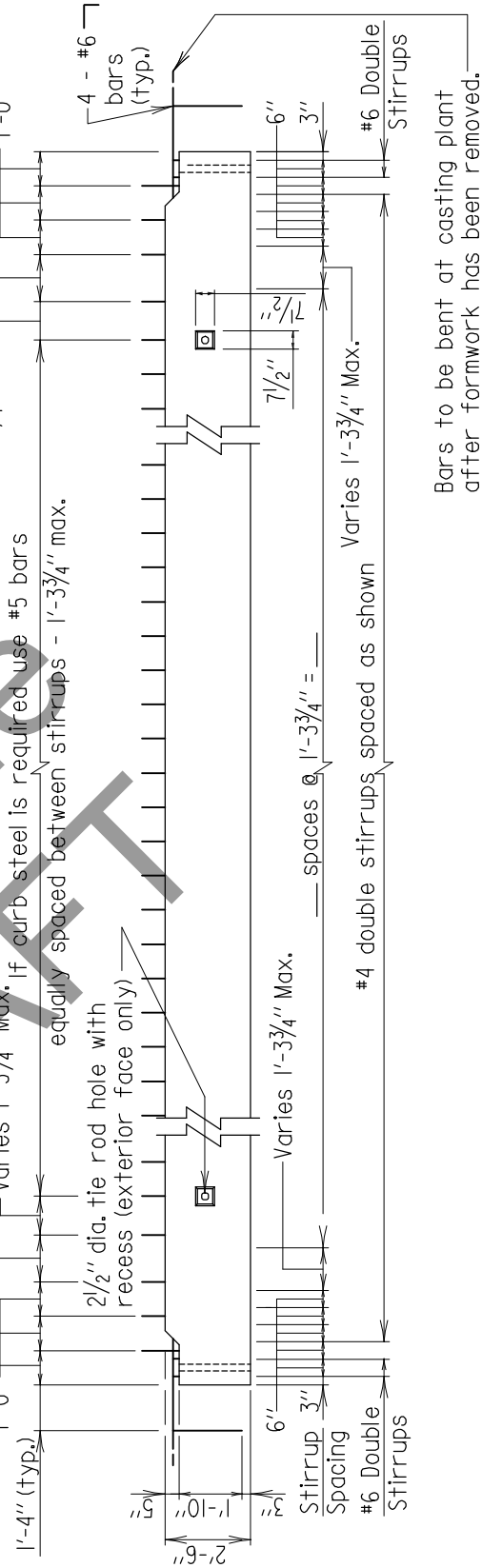

3'-0'' EXTERIOR SLAB ELEVATION
Scale: 3/16'' = 1'-0''

Note:
Stirrup spacing shown is for a 90° crossing. For bridges with other skew angles, see Std. No. SUP-SLAB(3FT)-803 for details of skewed ends.

Notes:

1. Extreme care shall be used in locating tie rod holes during the casting operation. Contractor shall assemble the slab units for the entire bridge width at the casting plant to ensure that there is no hole misalignment prior to shipping slab units to the site. Any misalignment of the holes will be cause for rejection of the slab unit. Drilling or coring of the slabs to create new or modified cast holes is prohibited.
2. Adjust curb rebar and stirrup spacing as needed to avoid tie rod hole and railing anchor bolts (if applicable).
3. All reinforcing steel to be epoxy coated.

Useable DRAFT

* USEABLE DRAFT *

APPROVAL	
_____ DIRECTOR OFFICE OF STRUCTURES	
DATE: 09/01/15	
REVISIONS	
SHA	FHWA
FHWA APPROVAL	
DATE:	

STATE OF MARYLAND
DEPARTMENT OF TRANSPORTATION
STATE HIGHWAY ADMINISTRATION
OFFICE OF STRUCTURES

SIMPLE SPAN GREATER THAN 50'-0'' TO 55'-0''
EXTERIOR 3'-0'' PRECAST CONCRETE SLAB PANEL
PLAN & ELEVATION

NO. SUP-SLAB(3FT)-802 SHEET 1 OF 2

SUPERSTRUCTURE SLABS

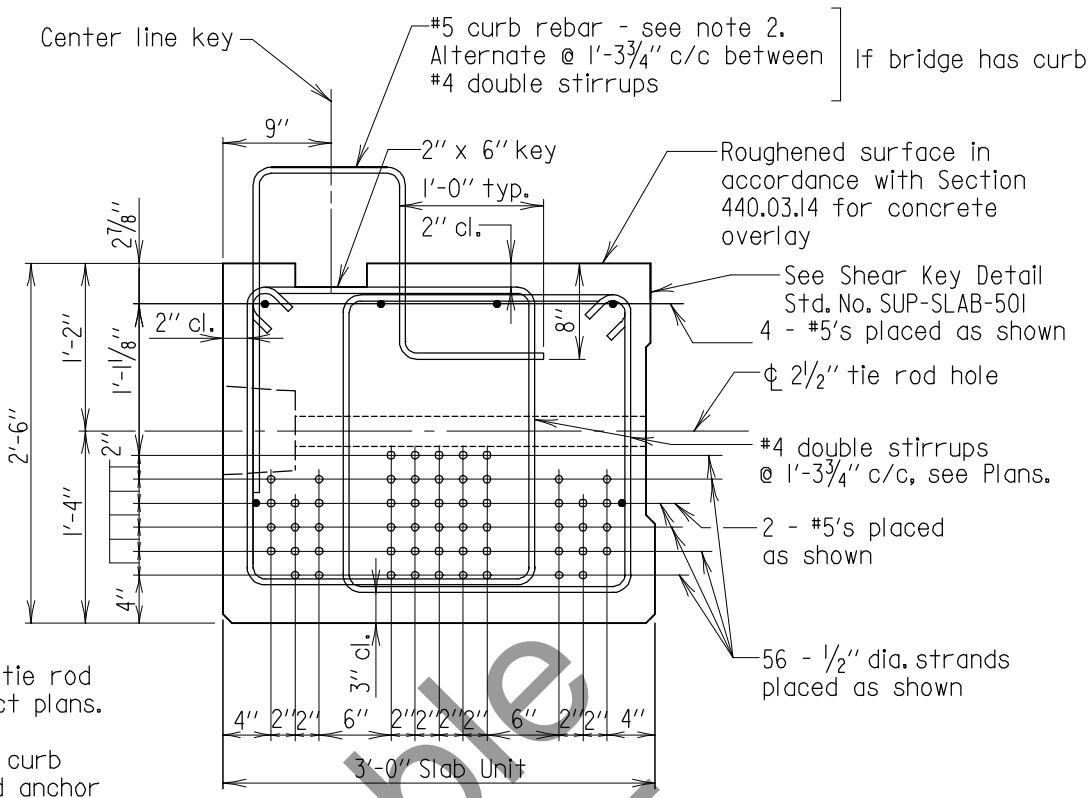

SECTION - SLAB AT MIDSPAN
Scale: ¾" = 1'-0"

Notes:

1. For location of tie rod holes, see contract plans.

2. For location of curb reinforcement and anchor bolts and plates to be cast in slab for railing, see Std. No. SUP-TB(TR)-301

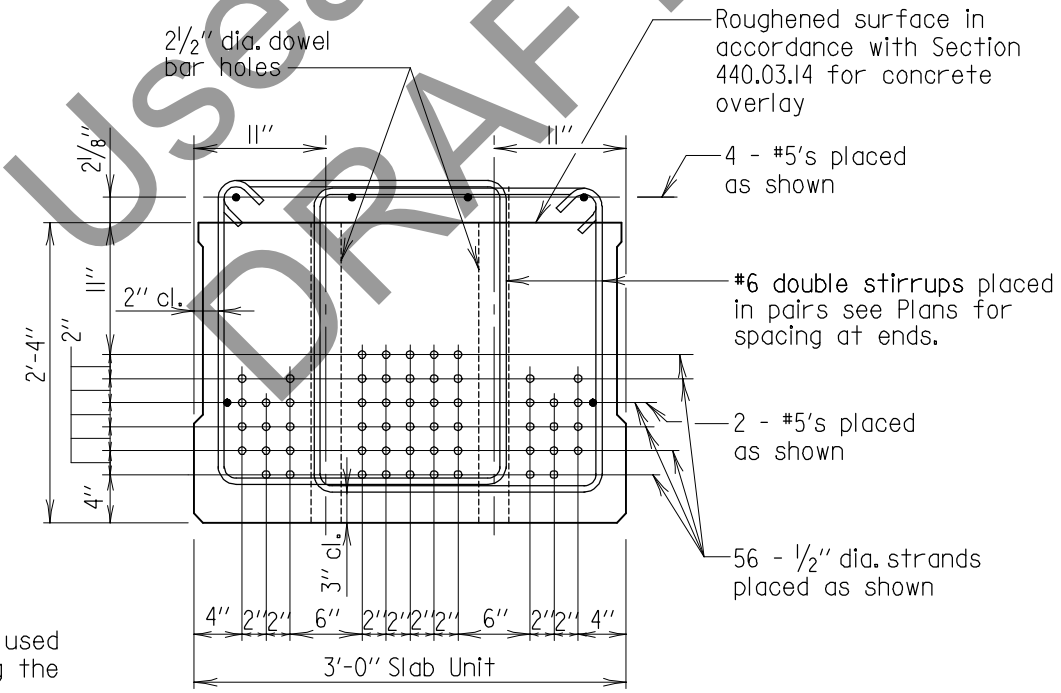

SECTION - SLAB AT ENDS
Scale: ¾" = 1'-0"

Note:
Extreme care shall be used when placing and tieing the curb rebar, railing and anchor bolts assembly to provide for the required clearances. Any misplaced rebar, dowel bar holes, tie rod holes or anchor bolts will be cause for rejection of the precast slab unit.

Useable DRAFT

* USEABLE DRAFT *

APPROVAL	
_____ DIRECTOR OFFICE OF STRUCTURES DATE: 09/01/15	
REVISIONS	
SHA	FHWA
FHWA APPROVAL	
DATE:	

STATE OF MARYLAND
DEPARTMENT OF TRANSPORTATION
STATE HIGHWAY ADMINISTRATION
OFFICE OF STRUCTURES

SIMPLE SPAN GREATER THAN 50'-0" TO 55'-0"
EXTERIOR 3'-0" PRECAST CONCRETE SLAB PANEL SECTIONS

NO. SUP-SLAB(3FT)-802 SHEET 2 OF 2

SUPERSTRUCTURE SLABS

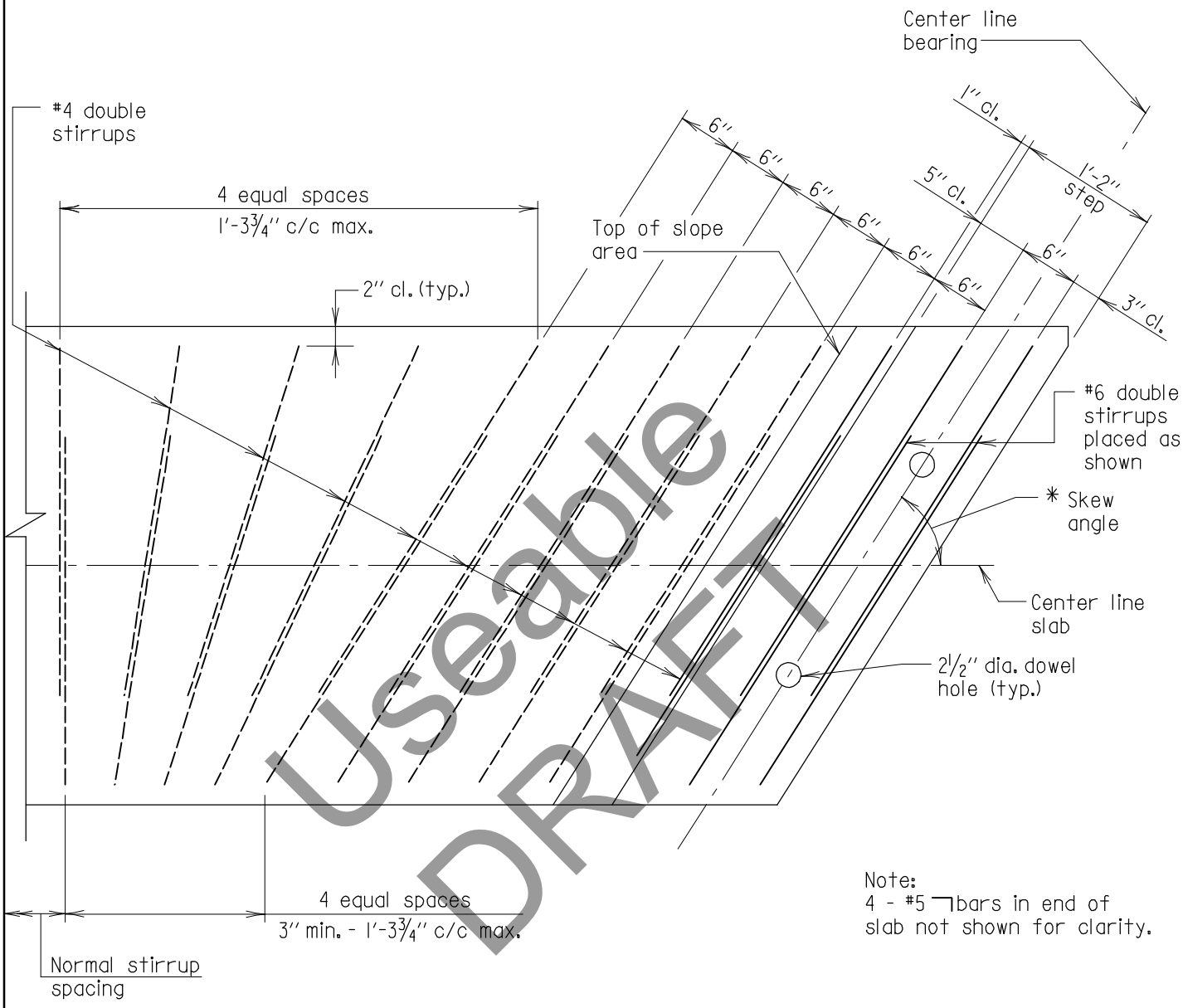

Useable DRAFT

Note:
4 - #5 ⌉bars in end of slab not shown for clarity.

Note to Fabricator:
End stirrup spacing must be laid out to determine spacing.

Note to Designer:
Layout shown works up to a skew angle of 55°. For angles less than 55° designer must layout skewed end detail on plans.

*For exact skew angle, see contract plan sheets.

PLAN
Scale: ¾" = 1'-0"

Note:
All reinforcing steel to be epoxy coated.

* USEABLE DRAFT *

APPROVAL	
_____ DIRECTOR OFFICE OF STRUCTURES DATE: 09/01/15	
REVISIONS	
SHA	FHWA
FHWA APPROVAL	
DATE:	

STATE OF MARYLAND
DEPARTMENT OF TRANSPORTATION
STATE HIGHWAY ADMINISTRATION
OFFICE OF STRUCTURES

SIMPLE SPAN GREATER THAN 50'-0" TO 55'-0"
INTERIOR 3'-0" PRECAST CONCRETE SLAB PANEL
SKEWED END DETAIL

NO. SUP-SLAB(3FT)-803 SHEET 1 OF 2

SUPERSTRUCTURE SLABS

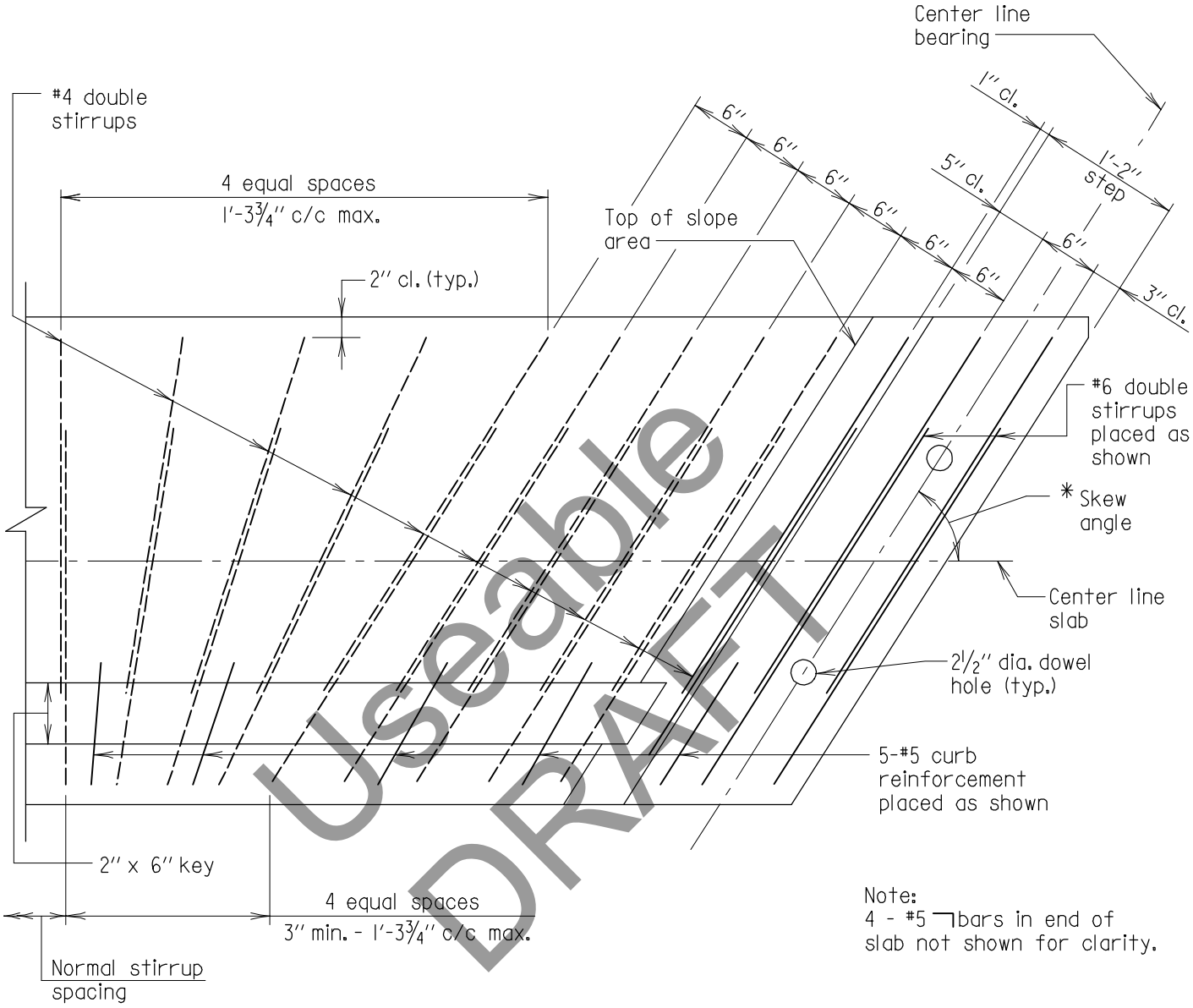

Useable DRAFT

Note:
4 - #5 ⌐bars in end of slab not shown for clarity.

Note to Fabricator:
End stirrup spacing must be laid out to determine spacing.

*For exact skew angle, see contract plan sheets.

PLAN
Scale: 3/4'' = 1'-0''

Note to Designer:
Layout shown works up to a skew angle of 55°. For angles less than 55° designer must layout skewed end detail on plans.

* USEABLE DRAFT *

Note:
All reinforcing steel to be epoxy coated.

APPROVAL	
_____ DIRECTOR OFFICE OF STRUCTURES DATE: 09/01/15	
REVISIONS	
SHA	FHWA

FHWA APPROVAL
DATE:

STATE OF MARYLAND
DEPARTMENT OF TRANSPORTATION
STATE HIGHWAY ADMINISTRATION
OFFICE OF STRUCTURES

SIMPLE SPAN GREATER THAN 50'-0'' TO 55'-0''
EXTERIOR 3'-0'' PRECAST CONCRETE SLAB PANEL
SKEWED END DETAIL

NO. SUP-SLAB(3FT)-803 SHEET 2 OF 2

SUPERSTRUCTURE SLABS

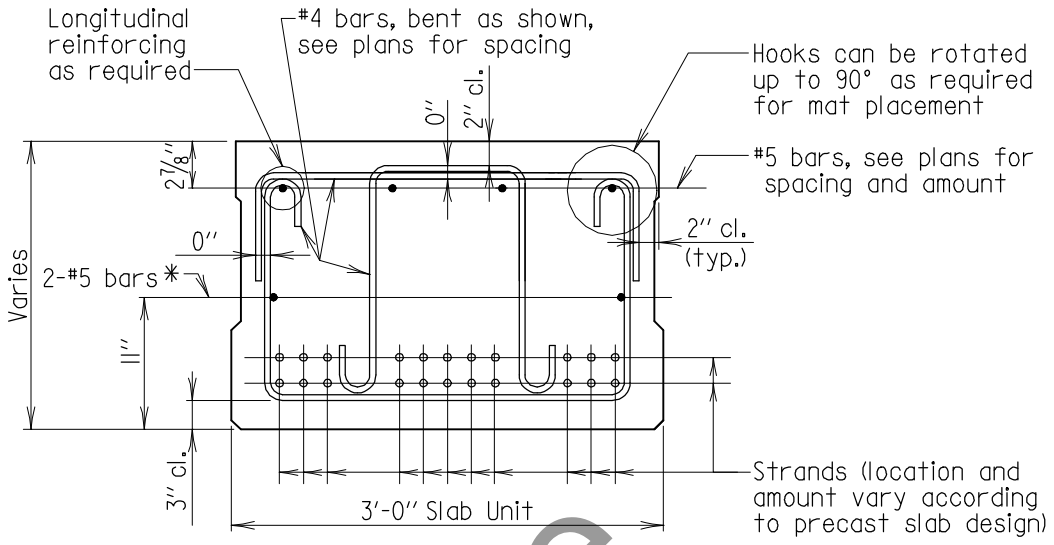

ALTERNATE REINFORCING SECTION - SLAB AT MIDSPAN

Scale: 3/4'' = 1'-0''

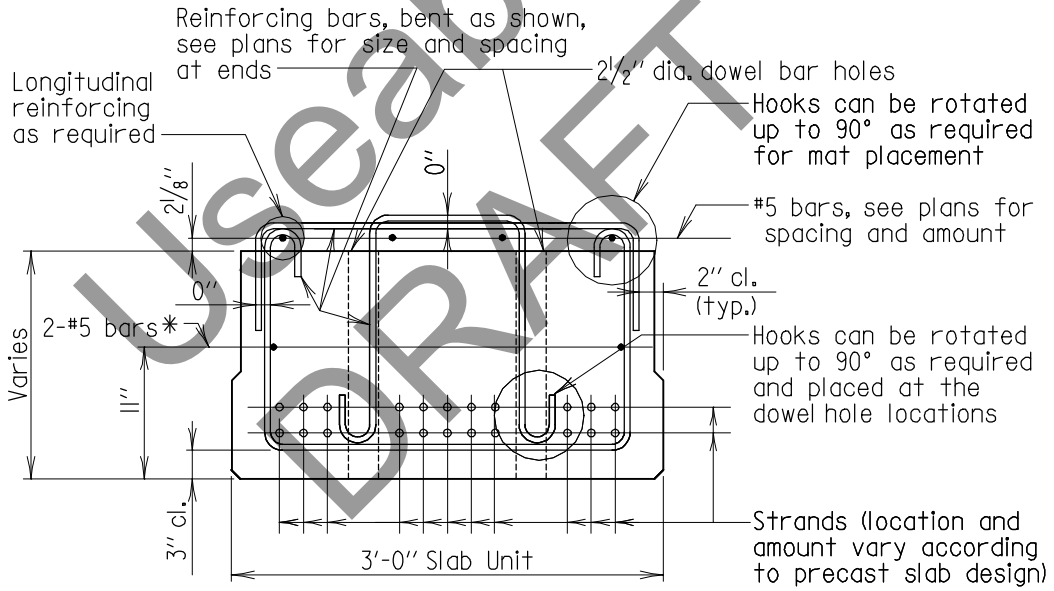

ALTERNATE REINFORCING SECTION - SLAB AT ENDS

Scale: 3/4'' = 1'-0''

Useable DRAFT

* These bars are only required for span lengths greater than 50'-0''.

* USEABLE DRAFT *

Note:
All reinforcing steel to be epoxy coated.

APPROVAL	
_____ DIRECTOR OFFICE OF STRUCTURES DATE: 09/01/15	
REVISIONS	
SHA	FHWA
FHWA APPROVAL	
DATE:	

STATE OF MARYLAND
DEPARTMENT OF TRANSPORTATION
STATE HIGHWAY ADMINISTRATION
OFFICE OF STRUCTURES

INTERIOR 3'-0'' PRECAST CONCRETE SLAB PANEL
ALTERNATE REINFORCING DETAILS

NO. SUP-SLAB(3FT)-901 SHEET 1 OF 2

SUPERSTRUCTURE SLABS

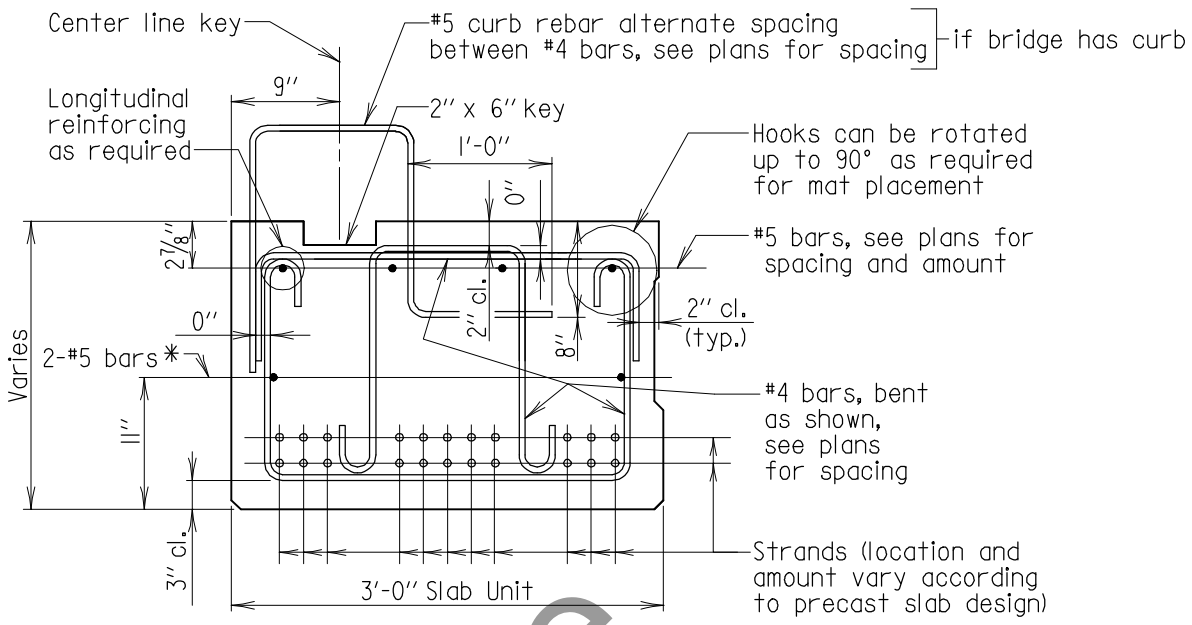

ALTERNATE REINFORCING SECTION - SLAB AT MIDSPAN

Scale: 3/4'' = 1'-0''

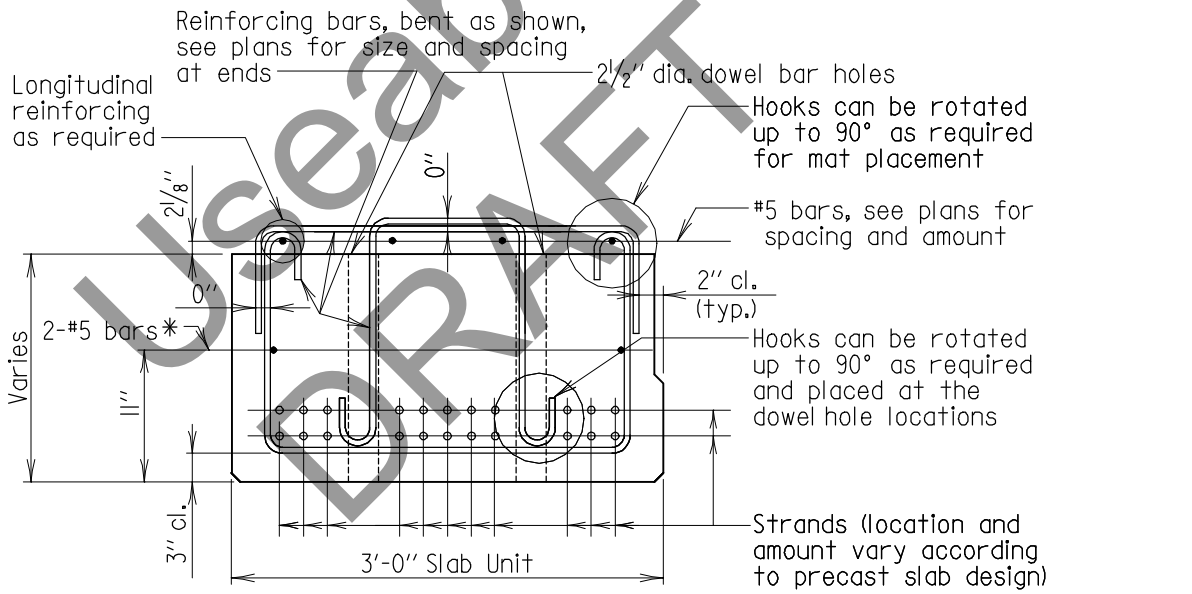

ALTERNATE REINFORCING SECTION - SLAB AT ENDS

Scale: 3/4'' = 1'-0''

Useable DRAFT

* These bars are only required for span lengths greater than 50'-0''.

Note:
All reinforcing steel to be epoxy coated.

* USEABLE DRAFT *

APPROVAL	
_____ DIRECTOR OFFICE OF STRUCTURES DATE: 09/01/15	
REVISIONS	
SHA	FHWA

FHWA APPROVAL
DATE:

STATE OF MARYLAND
DEPARTMENT OF TRANSPORTATION
STATE HIGHWAY ADMINISTRATION
OFFICE OF STRUCTURES

EXTERIOR 3'-0'' PRECAST CONCRETE SLAB PANEL
ALTERNATE REINFORCING DETAILS

NO. SUP-SLAB(3FT)-901 SHEET 2 OF 2

SUPERSTRUCTURE SLABS

SUPERSTRUCTURE

CONCRETE SLABS

4 FT WIDE SLABS

(SUP-SLAB(4FT))

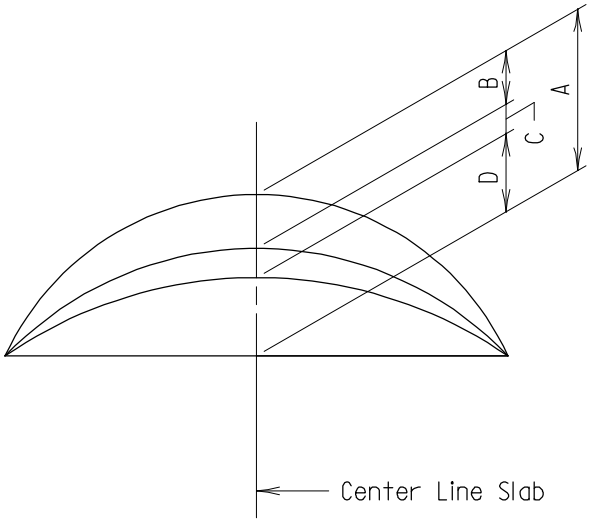

CAMBER DIAGRAM

Scale: None

Camber Notes:

Camber due to prestress plus slab dead load to be checked in the field.

The thickness of the concrete overlay shall be varied to compensate for any inaccuracies in the camber of slabs.

Prestress camber and dead load deflection data shown is theoretical and may vary with concrete strength, variable prestressing conditions and prestress losses.

Camber in slabs will increase due to concrete creep during storage. Precautions shall be taken by loading or other means to prevent additional camber from developing during storage of prestressed slabs.

A = Estimated camber due to prestress

B = Deflection due to dead load of prestressed slabs

C = Deflection due to dead load of cast-in-place concrete overlay, curbs and railing

D = Net final camber

Precast Concrete Slab Panel	A	B	C	D
Simple Span 20'-0" or less	3/16"	1/16"	1/16"	1/16"
Simple Span greater than 20'-0" to 25'-0"	5/16"	1/8"	1/16"	1/8"
Simple Span greater than 25'-0" to 30'-0"	3/4"	1/4"	3/16"	5/16"
Simple Span greater than 30'-0" to 35'-0"	15/16"	3/8"	3/16"	3/8"
Simple Span greater than 35'-0" to 40'-0"	1 1/8"	1/2"	3/16"	7/16"
Simple Span greater than 40'-0" to 45'-0"	1 11/16"	3/4"	3/8"	9/16"
Simple Span greater than 45'-0" to 50'-0"	2"	15/16"	3/8"	11/16"
Simple Span greater than 50'-0" to 55'-0"	2 3/16"	1 1/16"	3/8"	3/4"

Useable DRAFT

* USEABLE DRAFT *

APPROVAL	
_____ DIRECTOR OFFICE OF STRUCTURES	
DATE:	
REVISIONS	
SHA	FHWA
FHWA APPROVAL	
DATE:	

STATE OF MARYLAND
DEPARTMENT OF TRANSPORTATION
STATE HIGHWAY ADMINISTRATION
OFFICE OF STRUCTURES

SIMPLE SPAN EXTERIOR/INTERIOR
4'-0" PRECAST CONCRETE SLAB PANEL
DIAGRAM AND NOTES FOR CAMBER

NO. SUP-SLAB(4FT)-050 SHEET 1 OF 1

SUPERSTRUCTURE SLABS

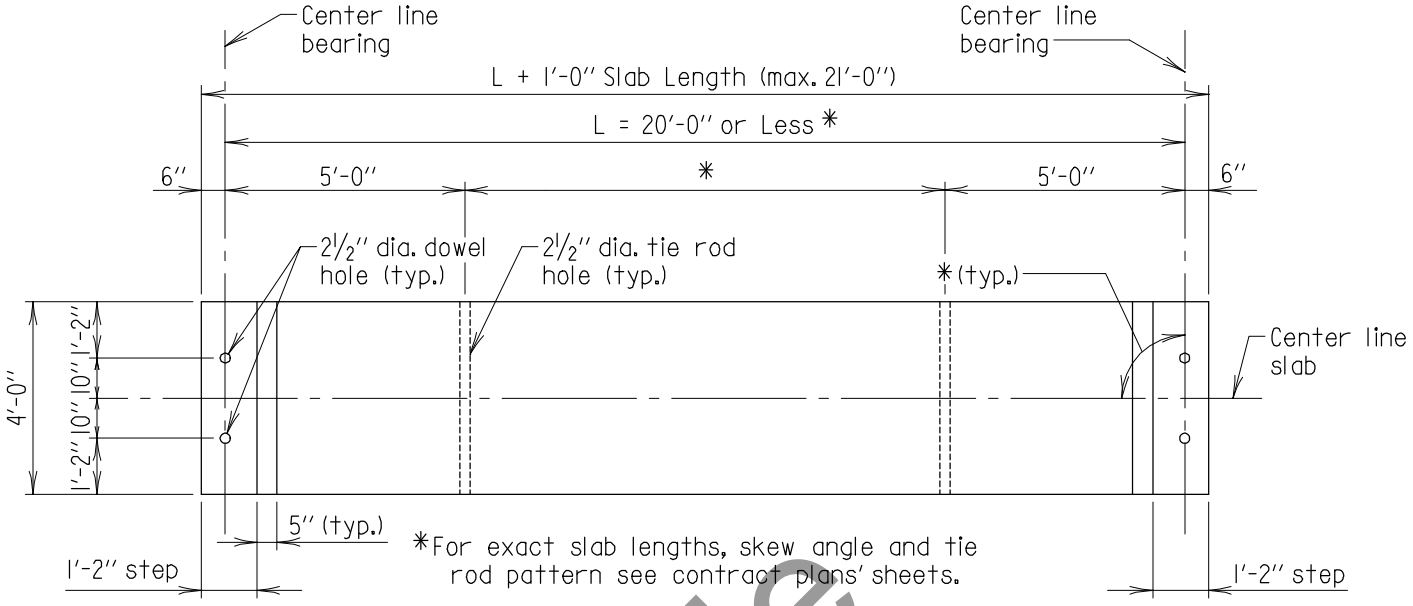

*For exact slab lengths, skew angle and tie rod pattern see contract plans' sheets.

Note:
Reinforcing steel at ends of slab not shown for clarity.

4'-0" INTERIOR SLAB PLAN
Scale: ¼" = 1'-0"

Useable DRAFT

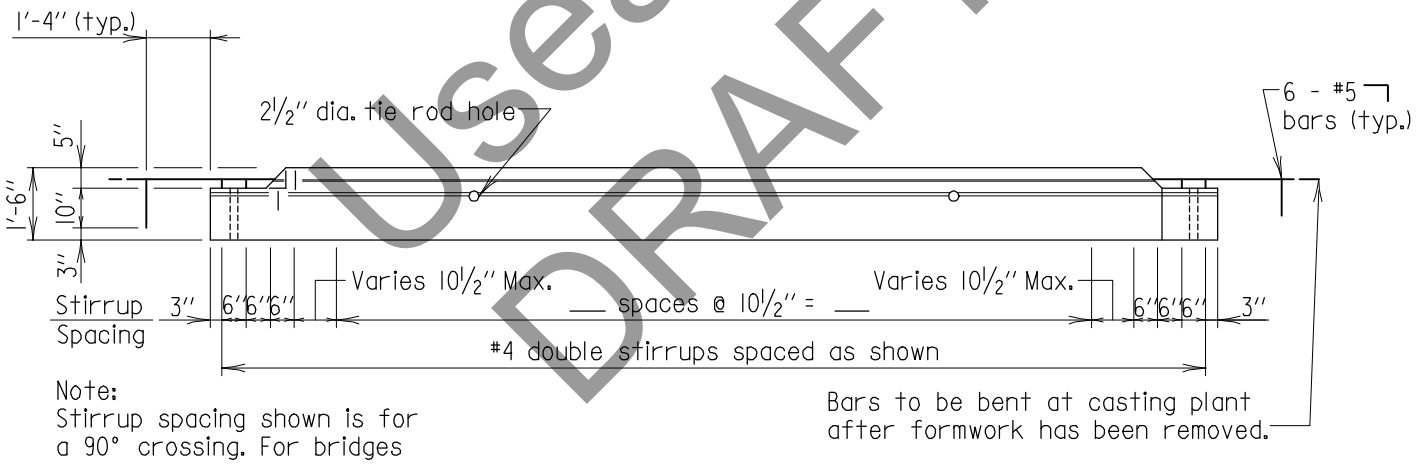

Note:
Stirrup spacing shown is for a 90° crossing. For bridges with other skew angles, see Std. No. SUP-SLAB(4FT)-103 for details of skewed ends.

4'-0" INTERIOR SLAB ELEVATION
Scale: ¼" = 1'-0"

Notes:
1. Extreme care shall be used in locating tie rod holes during the casting operation. Contractor shall assemble the slab units for the entire bridge width at the casting plant to ensure that there is no hole misalignment prior to shipping slab units to the site. Any misalignment of the holes will be cause for rejection of the slab unit. Drilling or coring of the slabs to create new or modified cast holes is prohibited.
2. Adjust stirrup spacing as needed to avoid tie rod hole.
3. All reinforcing steel to be epoxy coated.

* USEABLE DRAFT *

APPROVAL	
_____ DIRECTOR OFFICE OF STRUCTURES	
DATE: 09/01/15	
REVISIONS	
SHA	FHWA

FHWA APPROVAL
DATE:

STATE OF MARYLAND
DEPARTMENT OF TRANSPORTATION
STATE HIGHWAY ADMINISTRATION
OFFICE OF STRUCTURES

SIMPLE SPAN 20'-0" OR LESS
INTERIOR 4'-0" PRECAST CONCRETE SLAB PANEL
PLAN & ELEVATION

NO. SUP-SLAB(4FT)-101 SHEET 1 OF 2

SUPERSTRUCTURE SLABS

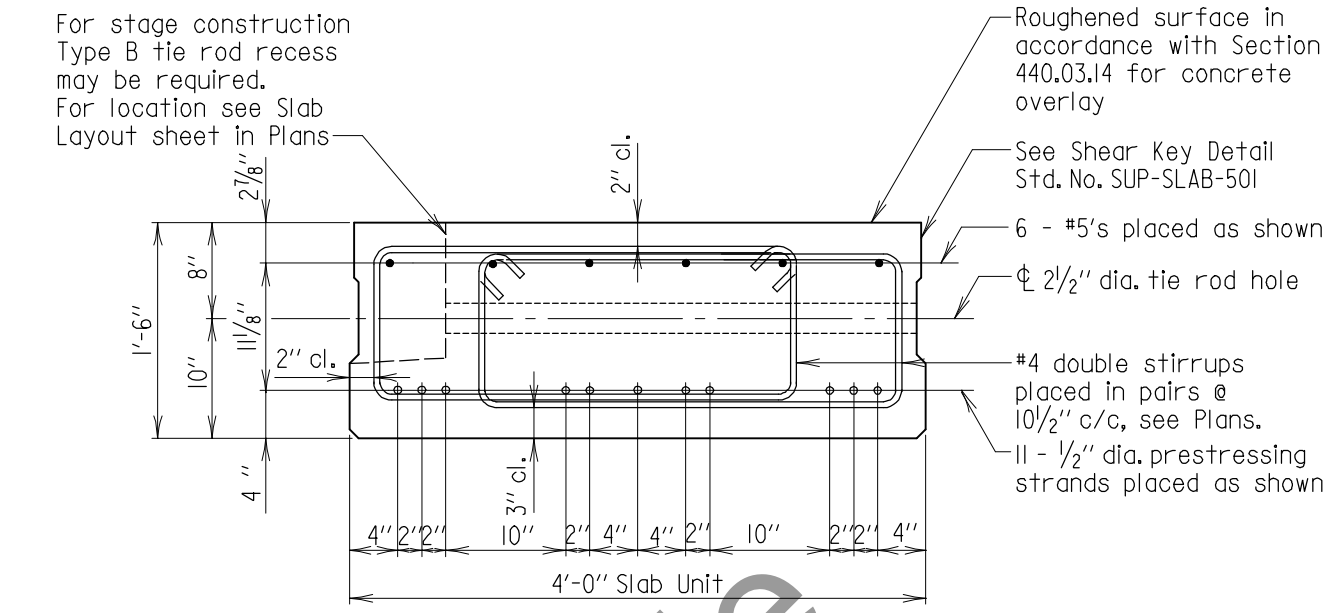

Note:
For location of tie rod holes, see contract plans.

SECTION - SLAB AT MIDSPAN
Scale: ¾" = 1'-0"

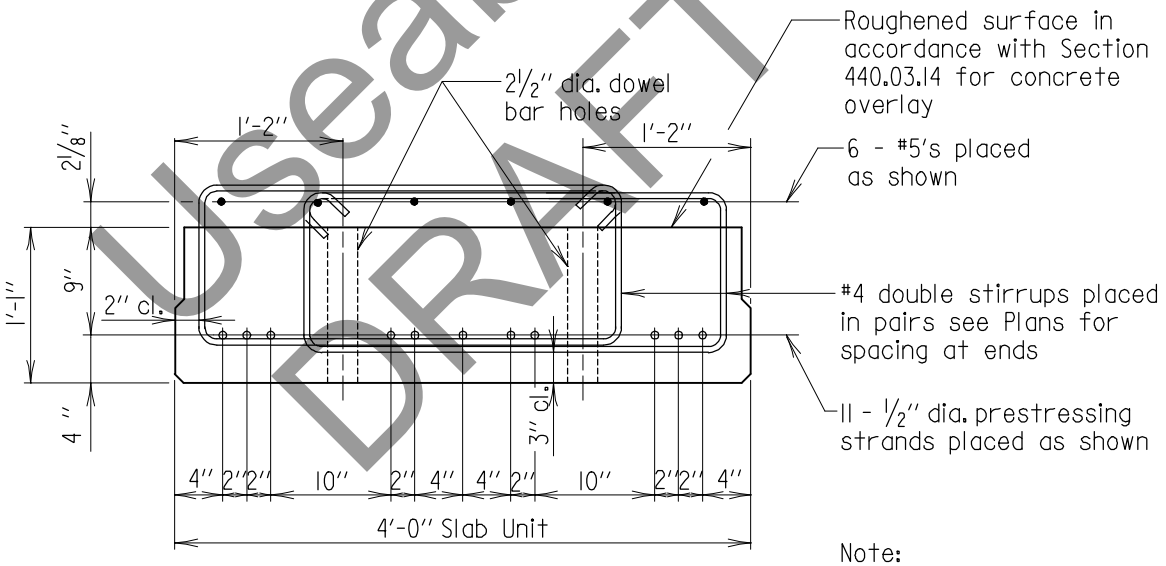

Note:
Any misplaced dowel bar holes or tie rod holes will be cause for rejection of the precast slab unit.

SECTION - SLAB AT ENDS
Scale: ¾" = 1'-0"

Useable DRAFT

* USEABLE DRAFT *

APPROVAL	
_____ DIRECTOR OFFICE OF STRUCTURES DATE: 09/01/15	
REVISIONS	
SHA	FHWA

FHWA APPROVAL
DATE:

STATE OF MARYLAND
DEPARTMENT OF TRANSPORTATION
STATE HIGHWAY ADMINISTRATION
OFFICE OF STRUCTURES

SIMPLE SPAN 20'-0" OR LESS
INTERIOR 4'-0" PRECAST CONCRETE SLAB PANEL
SECTIONS

NO. SUP-SLAB(4FT)-101 SHEET 2 OF 2

SUPERSTRUCTURE SLABS

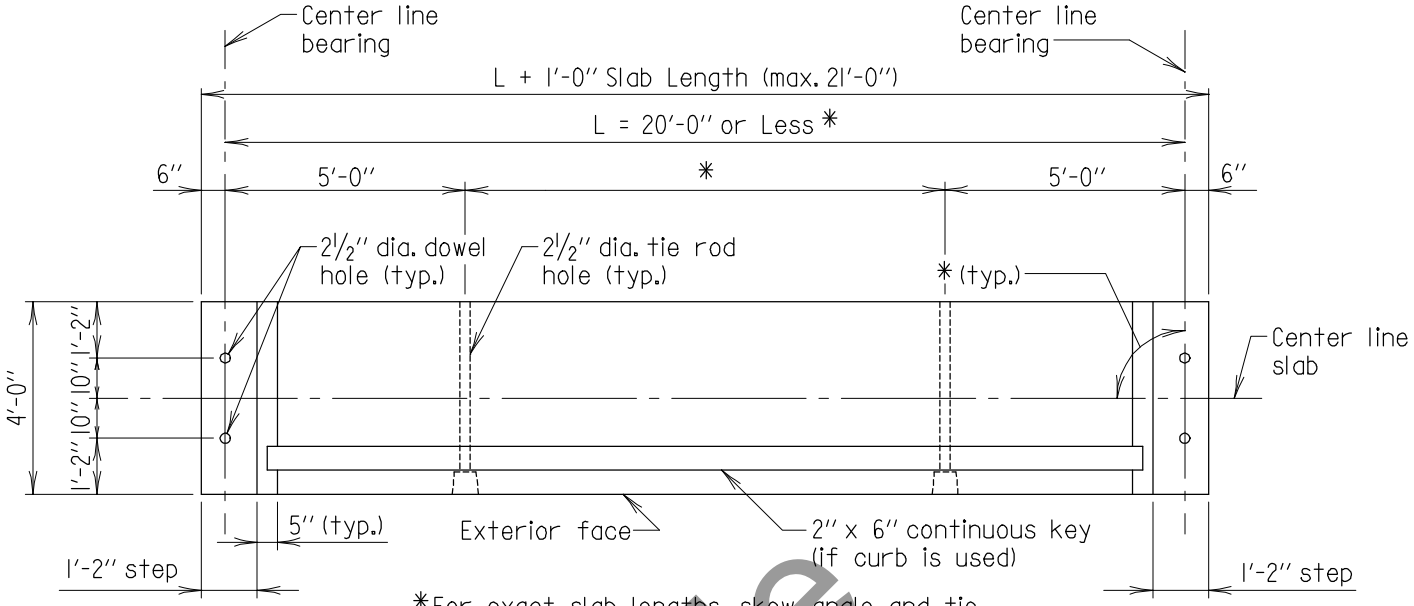

*For exact slab lengths, skew angle and tie rod pattern see contract plans' sheets.

Note:
Reinforcing steel at ends of slab and curb reinforcing not shown for clarity.

4'-0" EXTERIOR SLAB PLAN
Scale: ¼" = 1'-0"

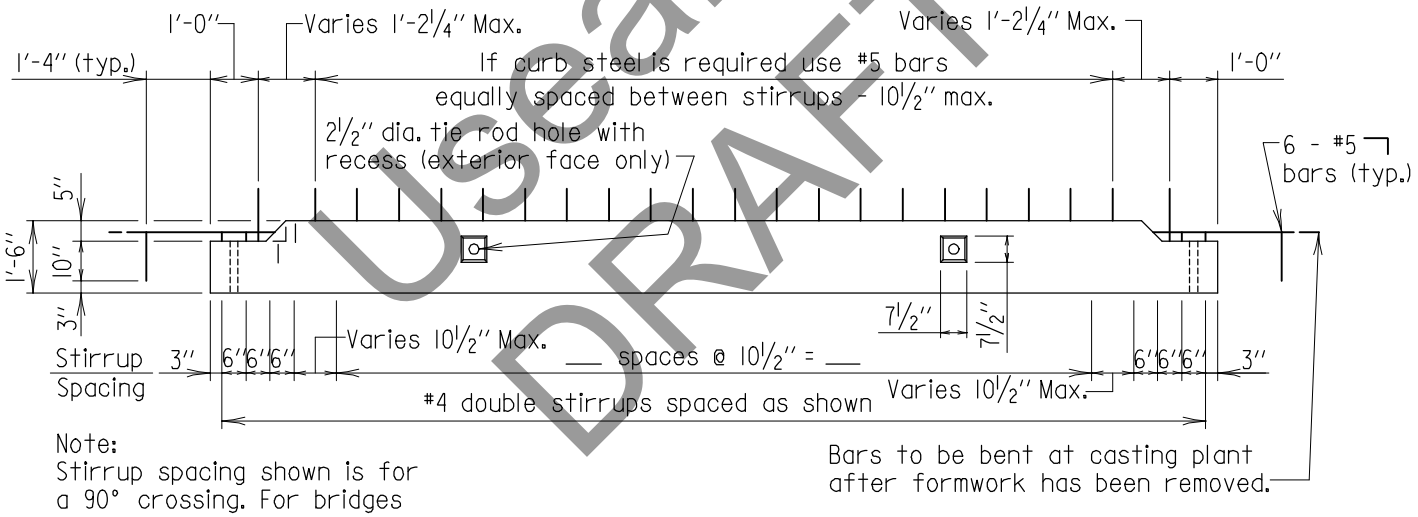

Note:
Stirrup spacing shown is for a 90° crossing. For bridges with other skew angles, see Std. No. SUP-SLAB(4FT)-103 for details of skewed ends.

4'-0" EXTERIOR SLAB ELEVATION
Scale: ¼" = 1'-0"

Notes:
1. Extreme care shall be used in locating tie rod holes during the casting operation. Contractor shall assemble the slab units for the entire bridge width at the casting plant to ensure that there is no hole misalignment prior to shipping slab units to the site. Any misalignment of the holes will be cause for rejection of the slab unit. Drilling or coring of the slabs to create new or modified cast holes is prohibited.
2. Adjust curb rebar and stirrup spacing as needed to avoid tie rod hole and railing anchor bolts (if applicable).
3. All reinforcing steel to be epoxy coated.

Useable DRAFT

* USEABLE DRAFT *

APPROVAL	
_____ DIRECTOR OFFICE OF STRUCTURES	
DATE: 09/01/15	
REVISIONS	
SHA	FHWA
FHWA APPROVAL	
DATE:	

STATE OF MARYLAND
DEPARTMENT OF TRANSPORTATION
STATE HIGHWAY ADMINISTRATION
OFFICE OF STRUCTURES

SIMPLE SPAN 20'-0" OR LESS
EXTERIOR 4'-0" PRECAST CONCRETE SLAB PANEL
PLAN & ELEVATION

NO. SUP-SLAB(4FT)-102 SHEET 1 OF 2

SUPERSTRUCTURE SLABS

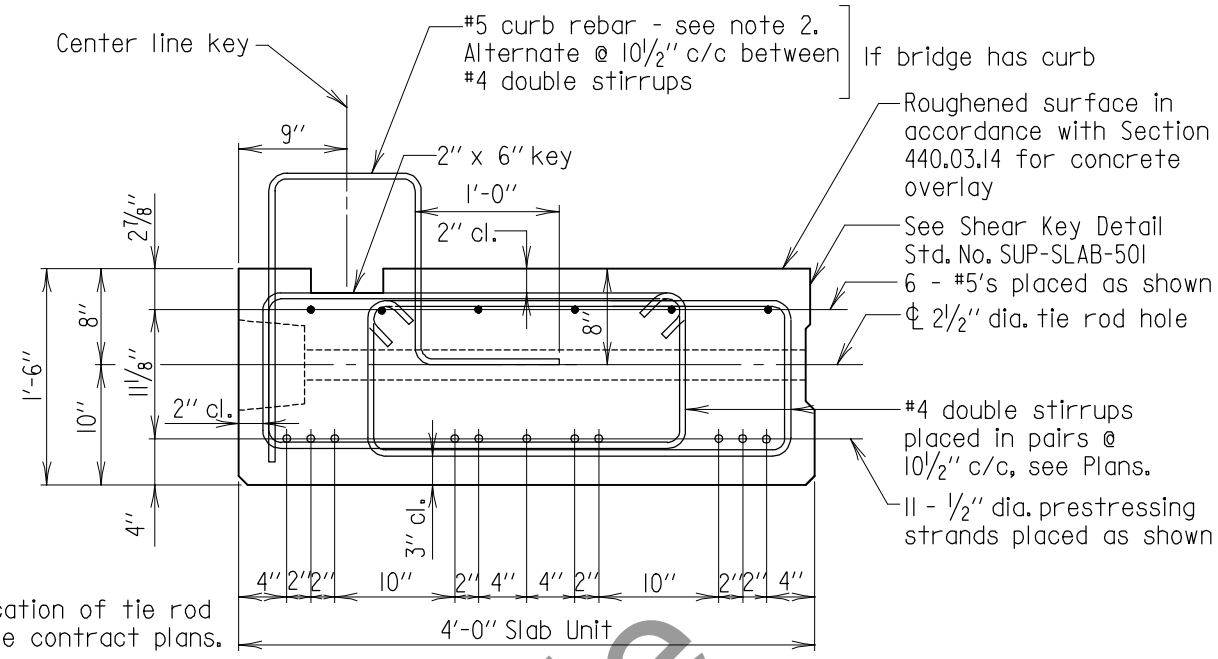

Notes:

1. For location of tie rod holes, see contract plans.

2. For location of curb reinforcement and anchor bolts and plates to be cast in slab for railing, see Std. No. SUP-TB(TR)-301

SECTION - SLAB AT MIDSPAN

Scale: ¾" = 1'-0"

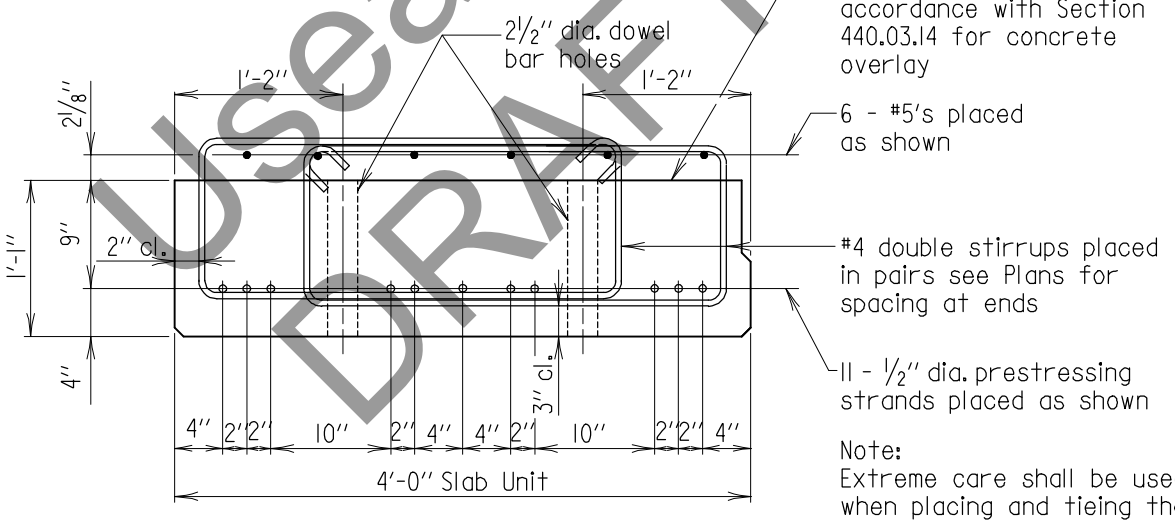

SECTION - SLAB AT ENDS

Scale: ¾" = 1'-0"

Note:
Extreme care shall be used when placing and tieing the curb rebar, railing and anchor bolts assembly to provide for the required clearances. Any misplaced rebar, dowel bar holes, tie rod holes or anchor bolts will be cause for rejection of the precast slab unit.

Useable DRAFT

* USEABLE DRAFT *

APPROVAL	
_____ DIRECTOR OFFICE OF STRUCTURES DATE: 09/01/15	
REVISIONS	
SHA	FHWA

FHWA APPROVAL
DATE:

STATE OF MARYLAND
DEPARTMENT OF TRANSPORTATION
STATE HIGHWAY ADMINISTRATION
OFFICE OF STRUCTURES

SIMPLE SPAN 20'-0" OR LESS
EXTERIOR 4'-0" PRECAST CONCRETE SLAB PANEL SECTIONS

NO. SUP-SLAB(4FT)-102 SHEET 2 OF 2

SUPERSTRUCTURE SLABS

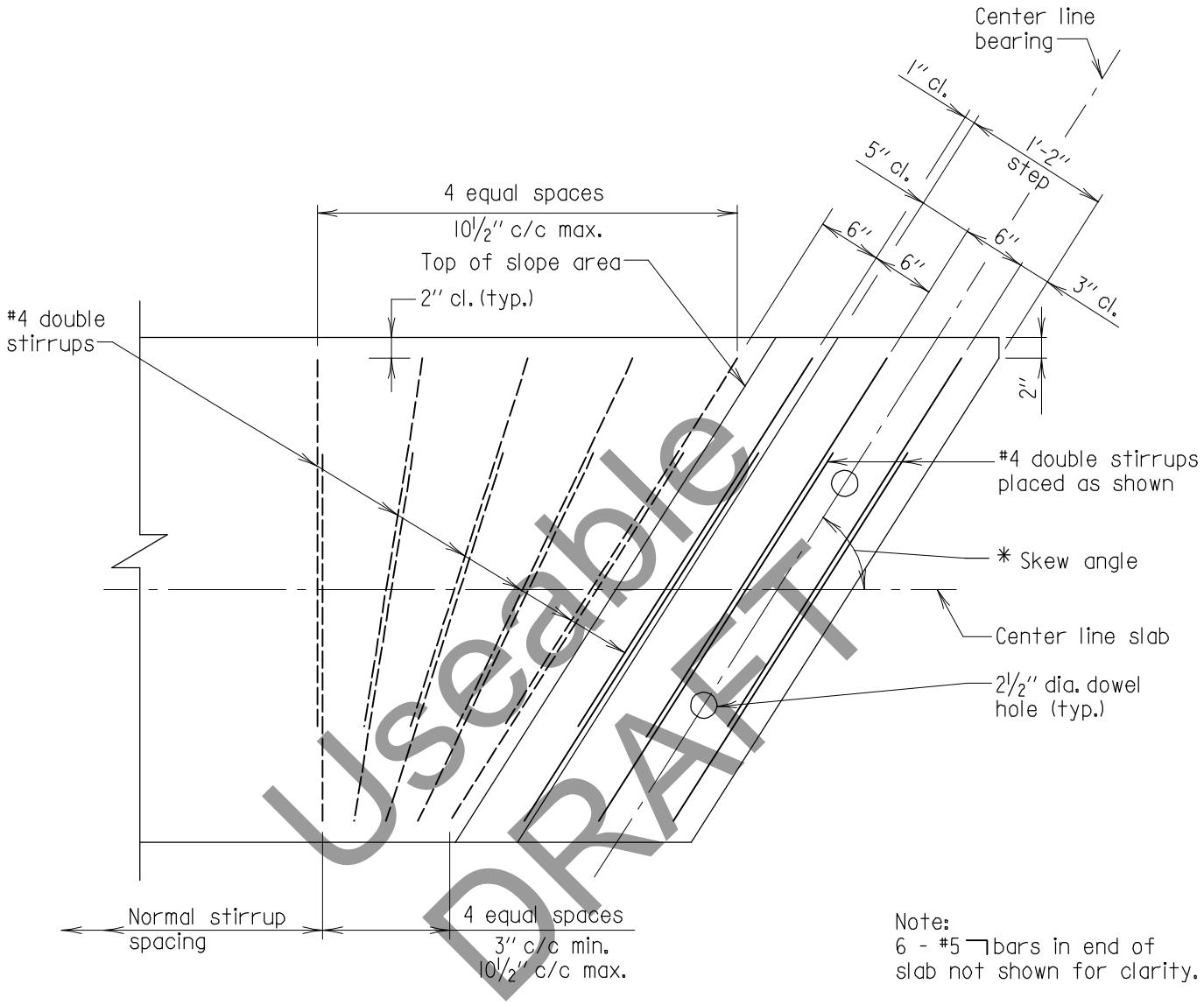

Useable DRAFT

Note:
6 - #5 ⌉ bars in end of slab not shown for clarity.

*For exact skew angle, see contract plan sheets.

PLAN
Scale: ¾'' = 1'-0''

Note to Fabricator:
End stirrup spacing must be laid out to determine spacing.

Note to Designer:
Layout shown works up to a skew angle of 55°. For angles less than 55° designer must layout skewed end detail on plans.

* USEABLE DRAFT *

Note:
All reinforcing steel to be epoxy coated.

APPROVAL	
_____ DIRECTOR OFFICE OF STRUCTURES DATE: 09/01/15	
REVISIONS	
SHA	FHWA
FHWA APPROVAL	
DATE:	

STATE OF MARYLAND
DEPARTMENT OF TRANSPORTATION
STATE HIGHWAY ADMINISTRATION
OFFICE OF STRUCTURES

SIMPLE SPAN 20'-0'' OR LESS
INTERIOR 4'-0'' PRECAST CONCRETE SLAB PANEL
SKEWED END DETAIL

NO. SUP-SLAB(4FT)-103 SHEET 1 OF 2

SUPERSTRUCTURE SLABS

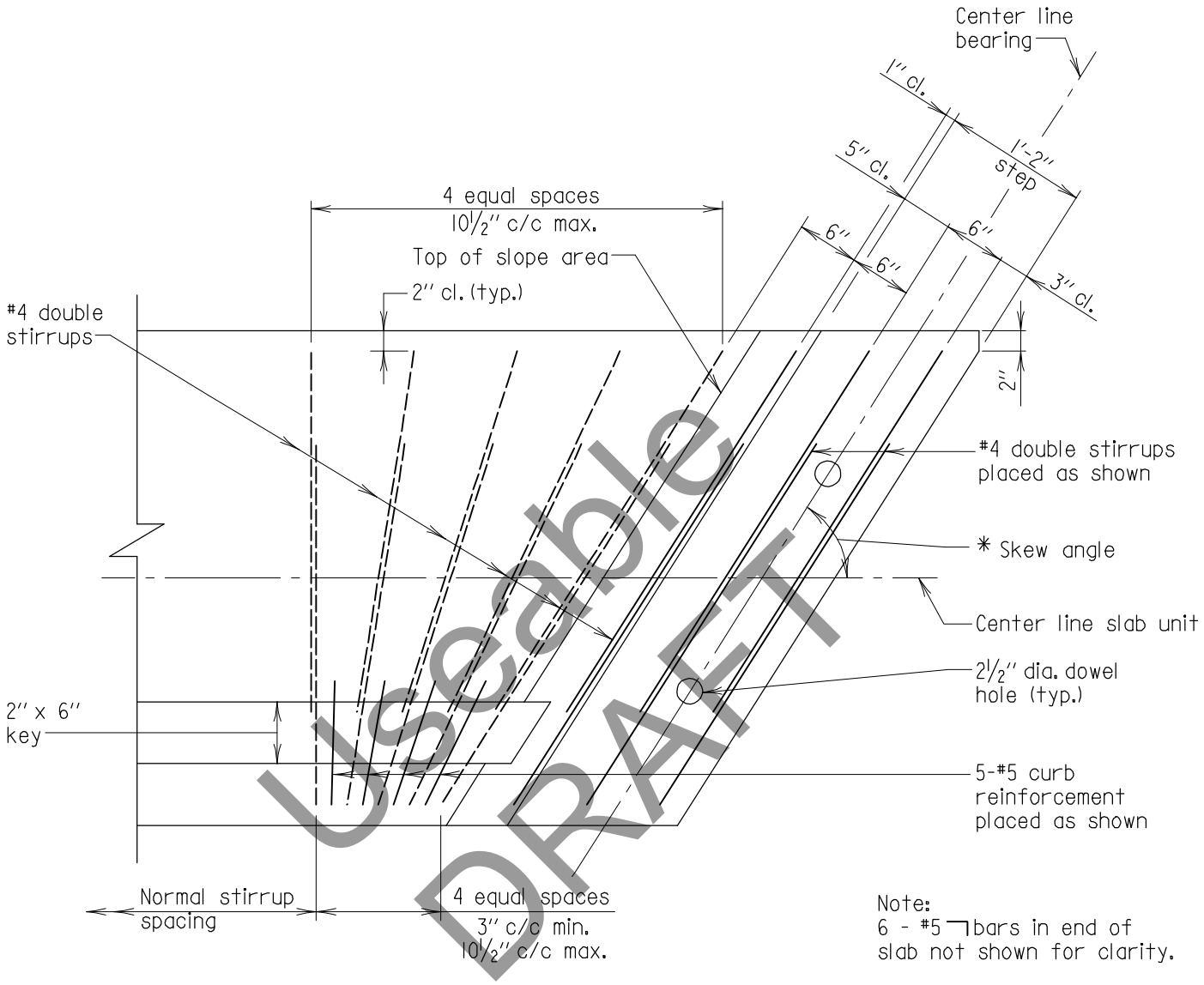

Useable DRAFT

Note:
6 - #5 ⌉ bars in end of slab not shown for clarity.

*For exact skew angle, see contract plan sheets.

PLAN
Scale: ¾'' = 1'-0''

Note to Fabricator:
End stirrup spacing must be laid out to determine spacing.

Note to Designer:
Layout shown works up to a skew angle of 55°. For angles less than 55° designer must layout skewed end detail on plans.

* USEABLE DRAFT *

Note:
All reinforcing steel to be epoxy coated.

APPROVAL	
_____ DIRECTOR OFFICE OF STRUCTURES DATE: 09/01/15	
REVISIONS	
SHA	FHWA
FHWA APPROVAL	
DATE:	

STATE OF MARYLAND
DEPARTMENT OF TRANSPORTATION
STATE HIGHWAY ADMINISTRATION
OFFICE OF STRUCTURES

SIMPLE SPAN 20'-0'' OR LESS
EXTERIOR 4'-0'' PRECAST CONCRETE SLAB PANEL
SKEWED END DETAIL

NO. SUP-SLAB(4FT)-103 SHEET 2 OF 2

SUPERSTRUCTURE SLABS

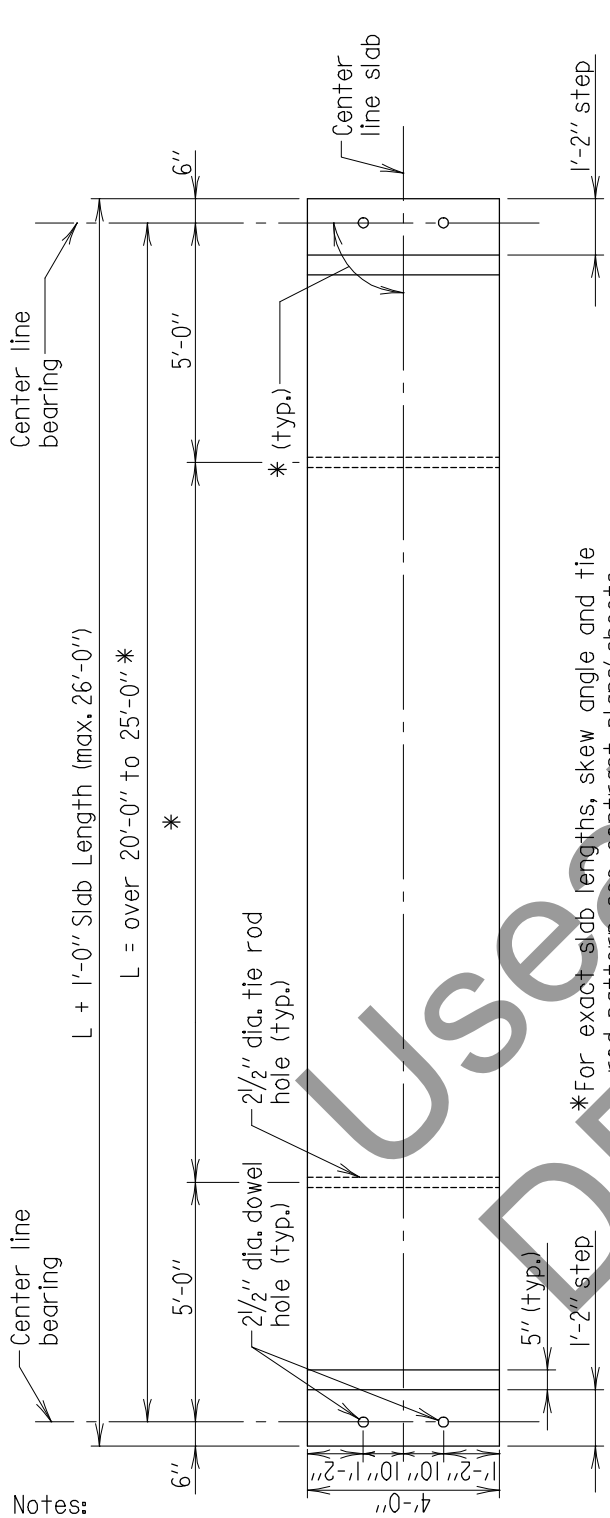

4'-0" INTERIOR SLAB PLAN
Scale: 1/4" = 1'-0"

*For exact slab lengths, skew angle and tie rod pattern see contract plans' sheets.

Note:
Stirrup spacing shown is for a 90° crossing. For bridges with other skew angles, see Std. No. SUP-SLAB(4FT)-203 for details of skewed ends.

Note:
Reinforcing steel at ends of slab not shown for clarity.

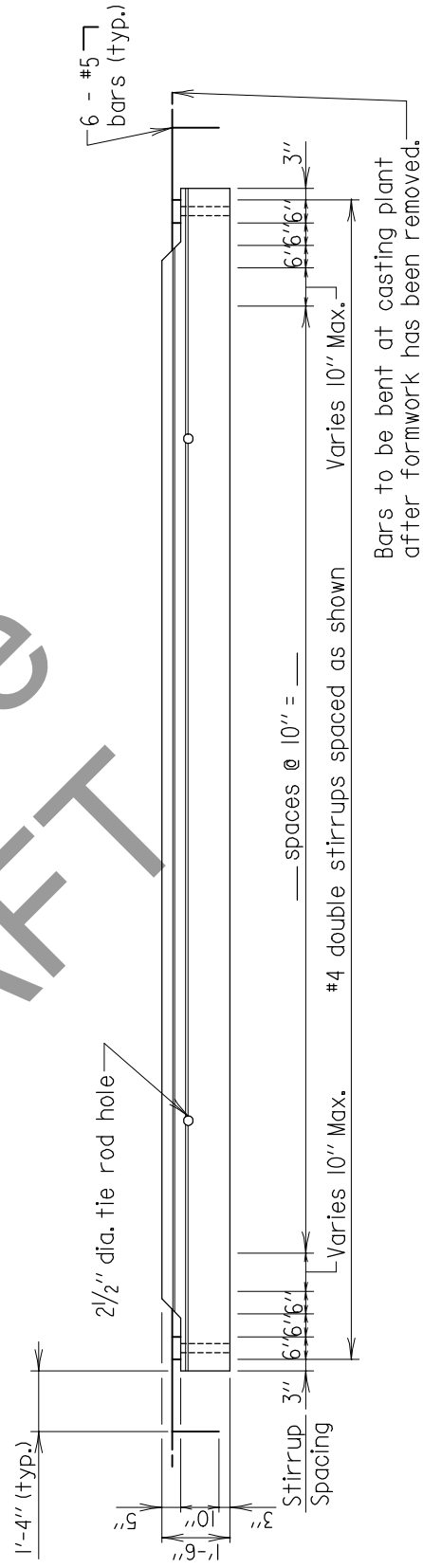

4'-0" INTERIOR SLAB ELEVATION
Scale: 1/4" = 1'-0"

Notes:

1. Extreme care shall be used in locating tie rod holes during the casting operation. Contractor shall assemble the slab units for the entire bridge width at the casting plant to ensure that there is no hole misalignment prior to shipping slab units to the site. Any misalignment of the holes will be cause for rejection of the slab unit. Drilling or coring of the slabs to create new or modified cast holes is prohibited.
2. Adjust curb rebar and stirrup spacing as needed to avoid tie rod hole and railing anchor bolts (if applicable).
3. All reinforcing steel to be epoxy coated.

Useable DRAFT

* USEABLE DRAFT *

APPROVAL	
_____ DIRECTOR OFFICE OF STRUCTURES	
DATE: 09/01/15	
REVISIONS	
SHA	FHWA

FHWA APPROVAL
DATE:

STATE OF MARYLAND
DEPARTMENT OF TRANSPORTATION
STATE HIGHWAY ADMINISTRATION
OFFICE OF STRUCTURES

SIMPLE SPAN GREATER THAN 20'-0" TO 25'-0"
INTERIOR 4'-0" PRECAST CONCRETE SLAB PANEL
PLAN & ELEVATION

NO. SUP-SLAB(4FT)-201 SHEET 1 OF 2

SUPERSTRUCTURE SLABS

For stage construction
Type B tie rod recess
may be required.
For location see Slab
Layout sheet in Plans

Roughened surface in
accordance with Section
440.03.14 for concrete
overlay

See Shear Key Detail
Std. No. SUP-SLAB-501

6 - #5's placed as shown

℄ 2½" dia. tie rod hole

#4 double stirrups
placed in pairs @
10" c/c, see Plans.

13 - ½" dia. strands
placed as shown

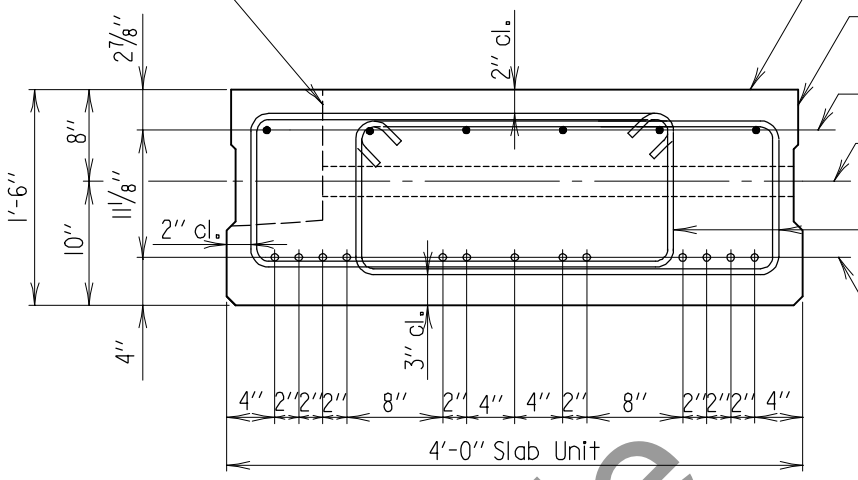

Note:
For location of tie rod
holes, see contract plans.

SECTION - SLAB AT MIDSPAN
Scale: ¾" = 1'-0"

2½" dia. dowel
bar holes

Roughened surface in
accordance with Section
440.03.14 for concrete
overlay

6 - #5's placed
as shown

#4 double stirrups
see Plans for spacing
at ends

13 - ½" dia. strands
placed as shown

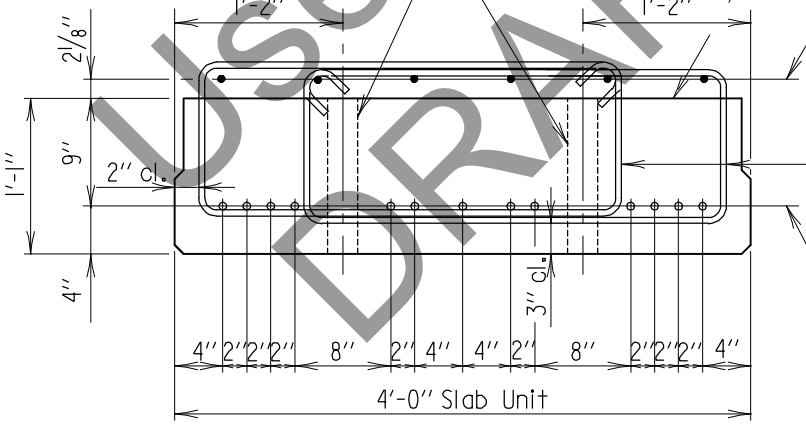

Note:
Any misplaced dowel bar
holes or tie rod holes will
be cause for rejection of
the precast slab unit.

SECTION - SLAB AT ENDS
Scale: ¾" = 1'-0"

Useable DRAFT

* USEABLE DRAFT *

APPROVAL	
_____ DIRECTOR OFFICE OF STRUCTURES DATE: 09/01/15	
REVISIONS	
SHA	FHWA
FHWA APPROVAL	
DATE:	

STATE OF MARYLAND
DEPARTMENT OF TRANSPORTATION
STATE HIGHWAY ADMINISTRATION
OFFICE OF STRUCTURES

SIMPLE SPAN GREATER THAN 20'-0" TO 25'-0"
INTERIOR 4'-0" PRECAST CONCRETE SLAB PANEL
SECTIONS

NO. SUP-SLAB(4FT)-201 SHEET 2 OF 2

SUPERSTRUCTURE SLABS

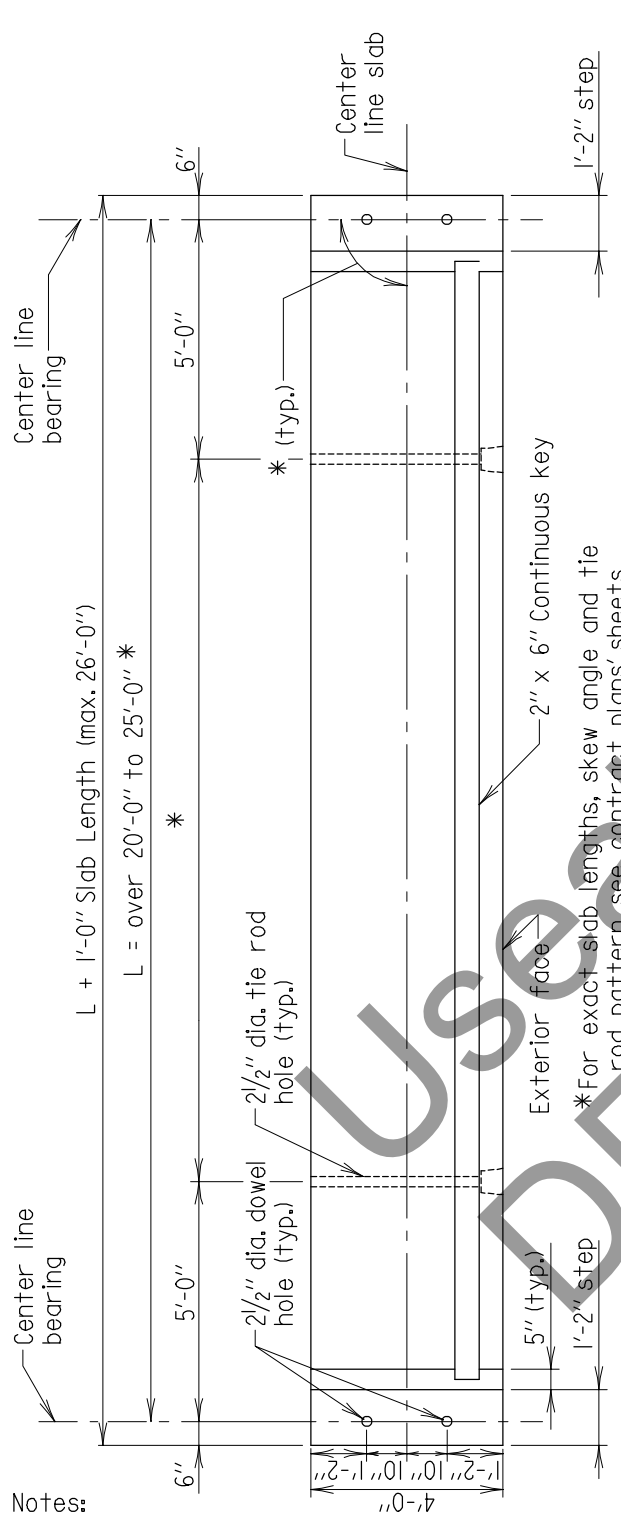

4'-0" EXTERIOR SLAB PLAN
Scale: 1/4" = 1'-0"

Note:
Reinforcing steel at ends of slab and curb reinforcing not shown for clarity.

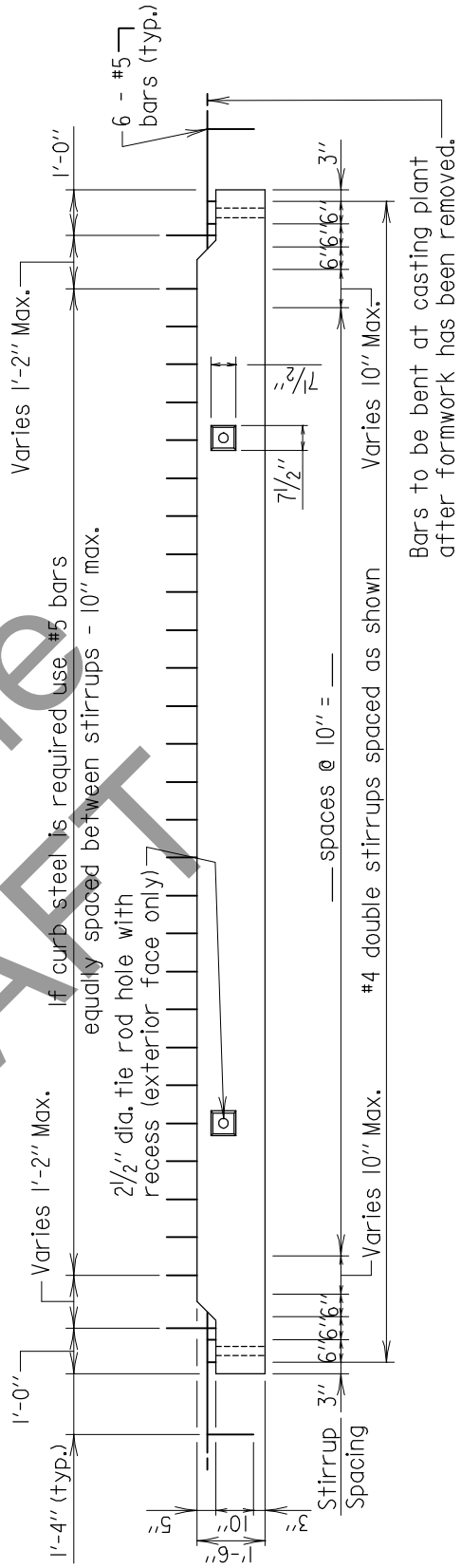

4'-0" EXTERIOR SLAB ELEVATION
Scale: 1/4" = 1'-0"

Note:
Stirrup spacing shown is for a 90° crossing. For bridges with other skew angles, see Std. No. SUP-SLAB(4FT)-203 for details of skewed ends.

Notes:

1. Extreme care shall be used in locating tie rod holes during the casting operation. Contractor shall assemble the slab units for the entire bridge width at the casting plant to ensure that there is no hole misalignment prior to shipping slab units to the site. Any misalignment of the holes will be cause for rejection of the slab unit. Drilling or coring of the slabs to create new or modified cast holes is prohibited.
2. Adjust curb rebar and stirrup spacing as needed to avoid tie rod hole and railing anchor bolts (if applicable).
3. All reinforcing steel to be epoxy coated.

Useable DRAFT

* USEABLE DRAFT *

APPROVAL	
_____ DIRECTOR OFFICE OF STRUCTURES	
DATE: 09/01/15	
REVISIONS	
SHA	FHWA

FHWA APPROVAL
DATE:

STATE OF MARYLAND
DEPARTMENT OF TRANSPORTATION
STATE HIGHWAY ADMINISTRATION
OFFICE OF STRUCTURES

SIMPLE SPAN GREATER THAN 20'-0" TO 25'-0"
EXTERIOR 4'-0" PRECAST CONCRETE SLAB PANEL
PLAN & ELEVATION

NO. SUP-SLAB(4FT)-202 SHEET 1 OF 2

SUPERSTRUCTURE SLABS

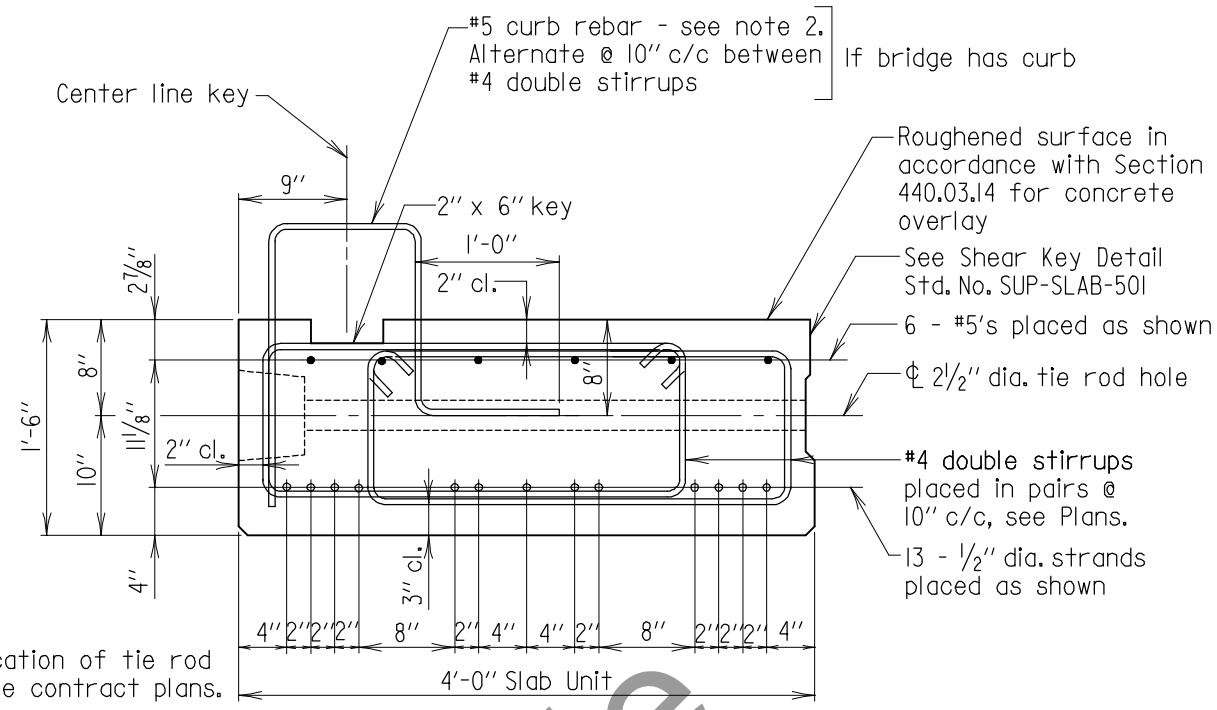

Notes:

1. For location of tie rod holes, see contract plans.

2. For location of curb reinforcement and anchor bolts and plates to be cast in slab for railing, see Std. No. SUP-TB(TR)-301

SECTION - SLAB AT MIDSPAN

Scale: ¾" = 1'-0"

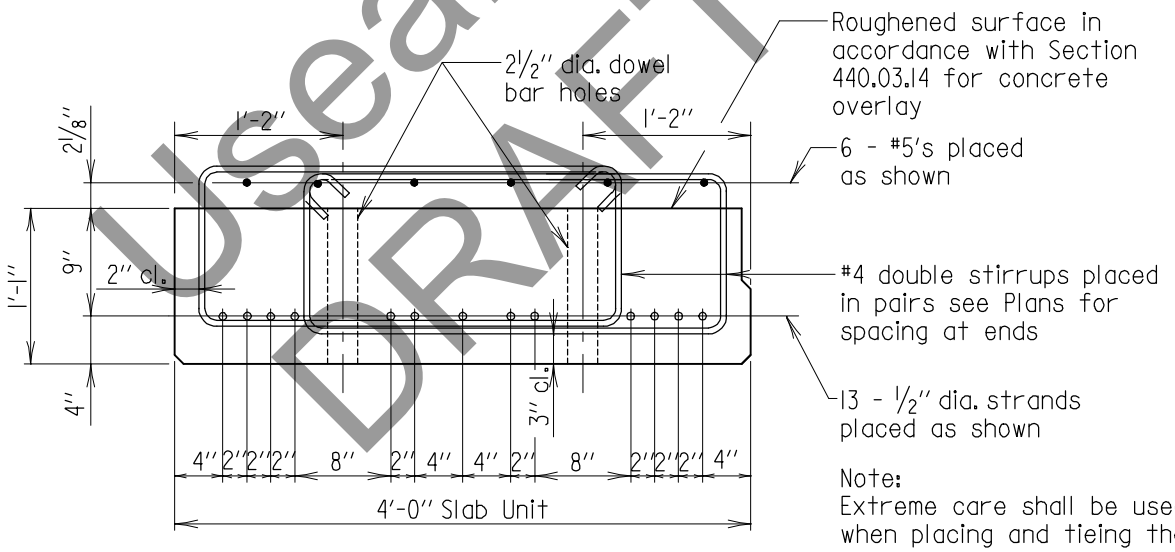

SECTION - SLAB AT ENDS

Scale: ¾" = 1'-0"

Note:
Extreme care shall be used when placing and tieing the curb rebar, railing and anchor bolts assembly to provide for the required clearances. Any misplaced rebar, dowel bar holes, tie rod holes or anchor bolts will be cause for rejection of the precast slab unit.

Useable DRAFT

* USEABLE DRAFT *

APPROVAL	
_____ DIRECTOR OFFICE OF BRIDGE DEVEL. DATE: 09/01/15	
REVISIONS	
SHA	FHWA
FHWA APPROVAL	
DATE:	

STATE OF MARYLAND
DEPARTMENT OF TRANSPORTATION
STATE HIGHWAY ADMINISTRATION
OFFICE OF STRUCTURES

SIMPLE SPAN GREATER THAN 20'-0" TO 25'-0"
EXTERIOR 4'-0" PRECAST CONCRETE SLAB PANEL SECTIONS

NO. SUP-SLAB(4FT)-202 SHEET 2 OF 2

SUPERSTRUCTURE SLABS

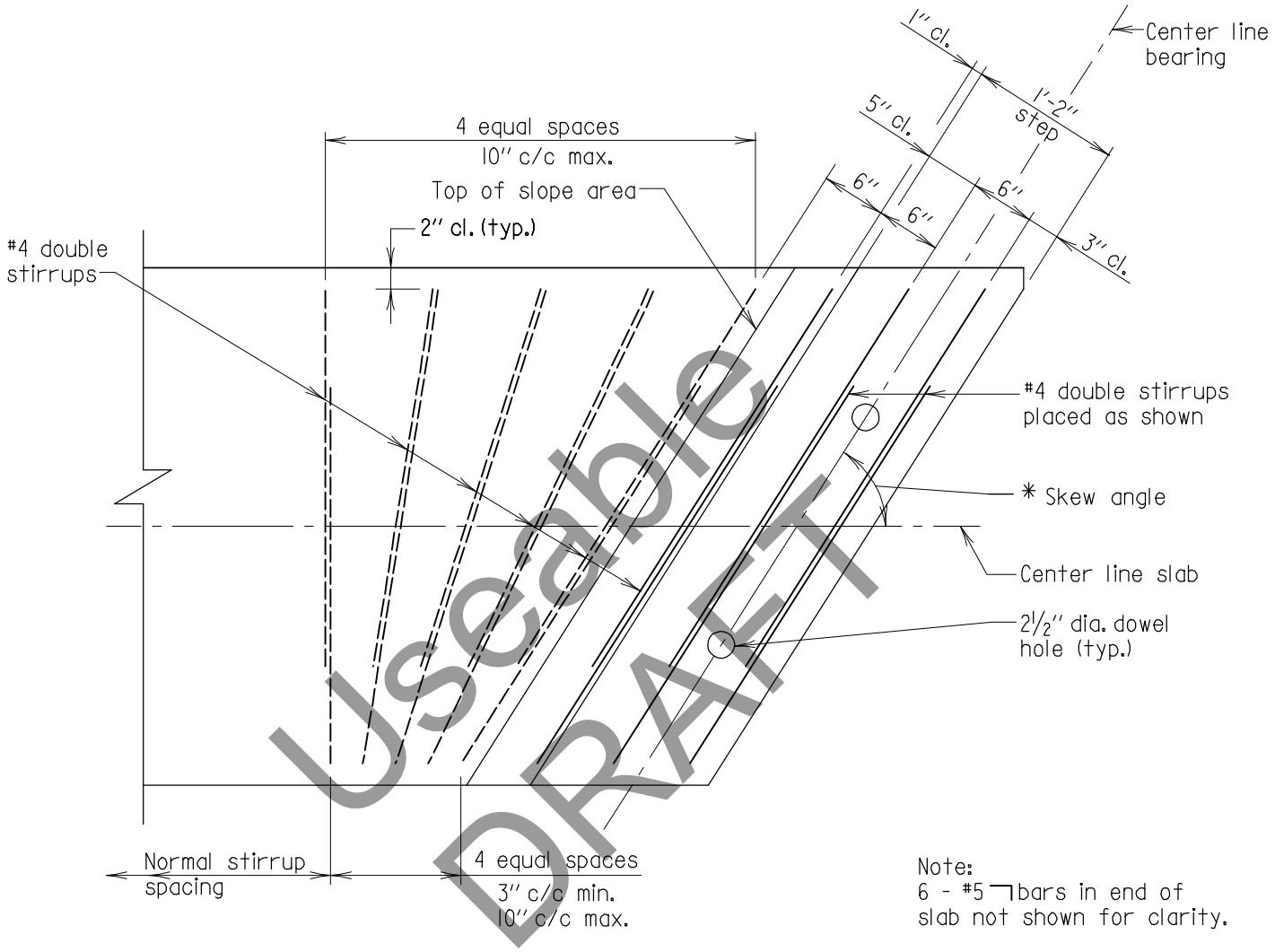

Useable DRAFT

Note:
6 - #5 ⌉ bars in end of slab not shown for clarity.

*For exact skew angle, see contract plan sheets.

PLAN
Scale: 3/4" = 1'-0"

Note to Fabricator:
End stirrup spacing must be laid out to determine spacing.

Note to Designer:
Layout shown works up to a skew angle of 55°. For angles less than 55° designer must layout skewed end detail on plans.

* USEABLE DRAFT *

Note:
All reinforcing steel to be epoxy coated.

APPROVAL	
_____ DIRECTOR OFFICE OF STRUCTURES DATE: 09/01/15	
REVISIONS	
SHA	FHWA
FHWA APPROVAL	
DATE:	

STATE OF MARYLAND
DEPARTMENT OF TRANSPORTATION
STATE HIGHWAY ADMINISTRATION
OFFICE OF STRUCTURES

SIMPLE SPAN GREATER THAN 20'-0" TO 25'-0"
INTERIOR 4'-0" PRECAST CONCRETE SLAB PANEL
SKEWED END DETAIL

NO. SUP-SLAB(4FT)-203 SHEET 1 OF 2

SUPERSTRUCTURE SLABS

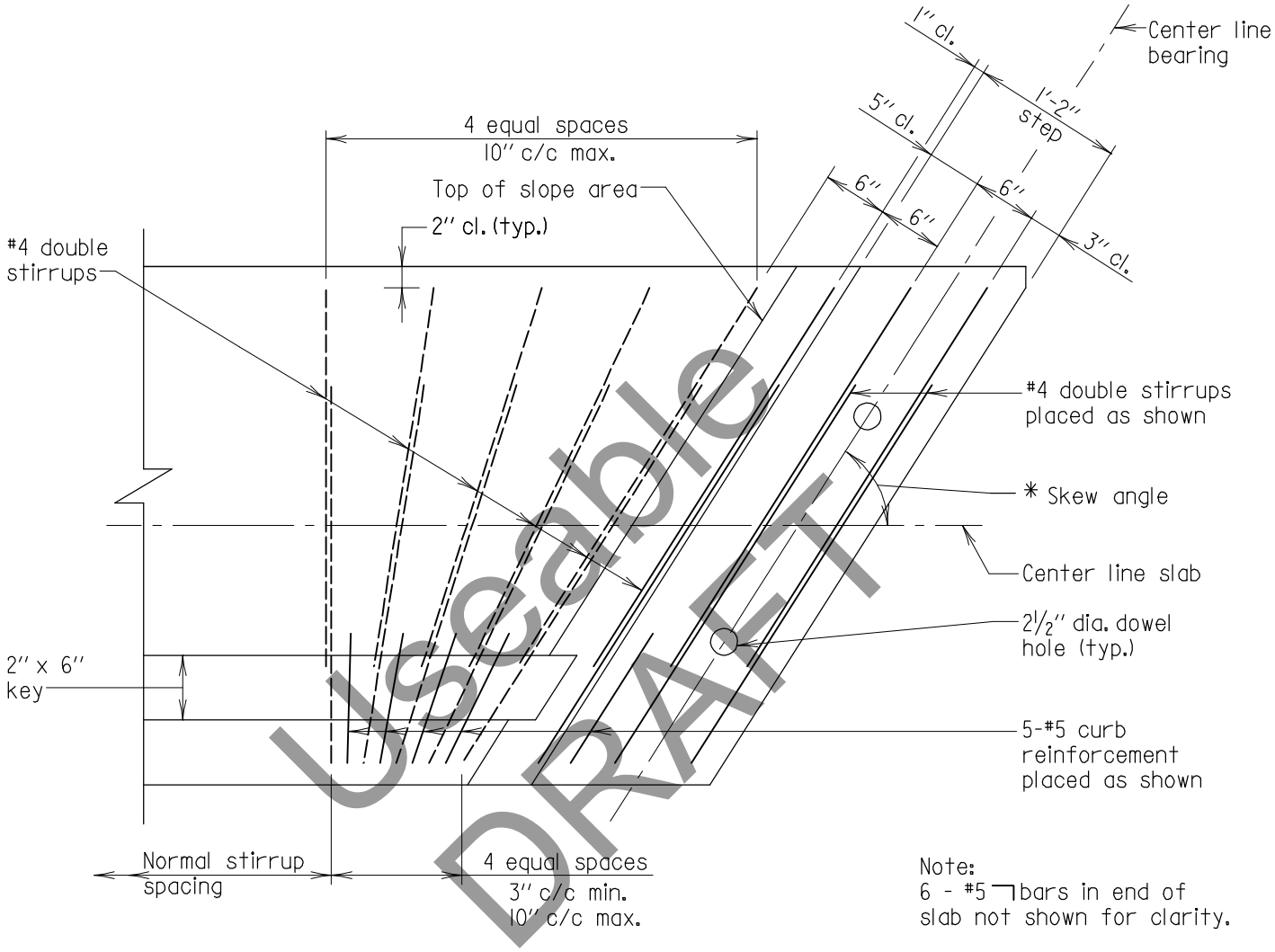

Useable DRAFT

Note:
6 - #5 ⌉ bars in end of slab not shown for clarity.

*For exact skew angle, see contract plan sheets.

PLAN
Scale: 3/4'' = 1'-0''

Note to Fabricator:
End stirrup spacing must be laid out to determine spacing.

Note to Designer:
Layout shown works up to a skew angle of 55°. For angles less than 55° designer must layout skewed end detail on plans.

* USEABLE DRAFT *

Note:
All reinforcing steel to be epoxy coated.

APPROVAL	
_____ DIRECTOR OFFICE OF STRUCTURES DATE: 09/01/15	
REVISIONS	
SHA	FHWA

FHWA APPROVAL
DATE:

STATE OF MARYLAND
DEPARTMENT OF TRANSPORTATION
STATE HIGHWAY ADMINISTRATION
OFFICE OF STRUCTURES

SIMPLE SPAN GREATER THAN 20'-0'' TO 25'-0''
EXTERIOR 4'-0'' PRECAST CONCRETE SLAB PANEL
SKEWED END DETAIL

NO. SUP-SLAB(4FT)-203 SHEET 2 OF 2

SUPERSTRUCTURE SLABS

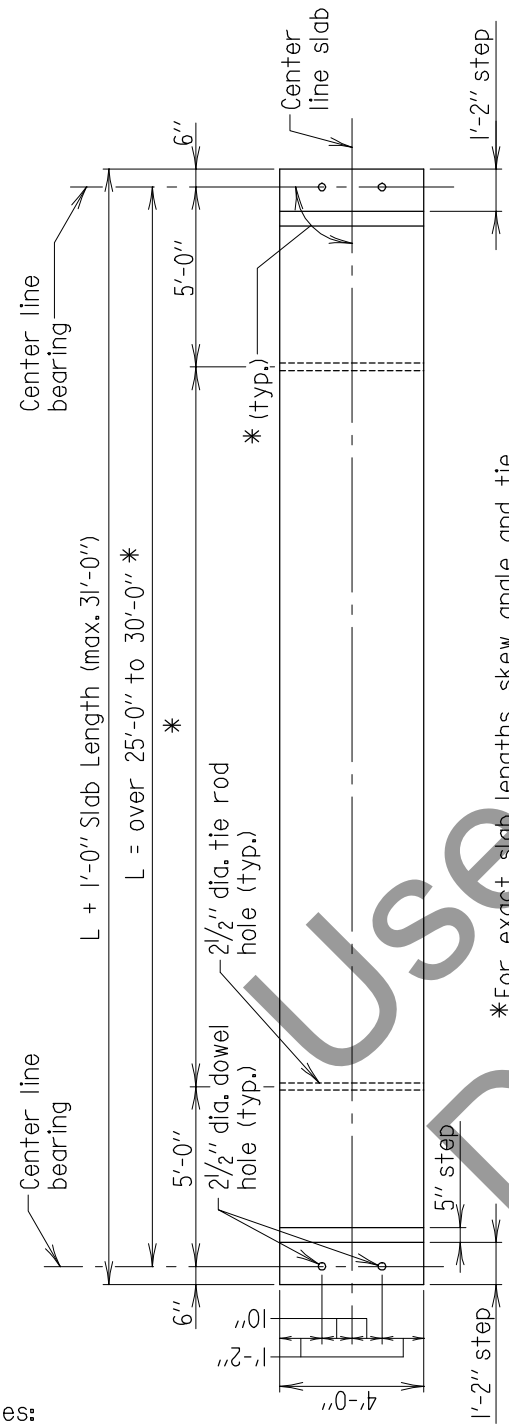

*For exact slab lengths, skew angle and tie rod pattern see contract plans' sheets.

4'-0" INTERIOR SLAB PLAN
Scale: 3/16" = 1'-0"

Note:
Stirrup spacing shown is for a 90° crossing. For bridges with other skew angles, see Std. No. SUP-SLAB(4FT)-303 for details of skewed ends.

Note:
Reinforcing steel at ends of slab not shown for clarity.

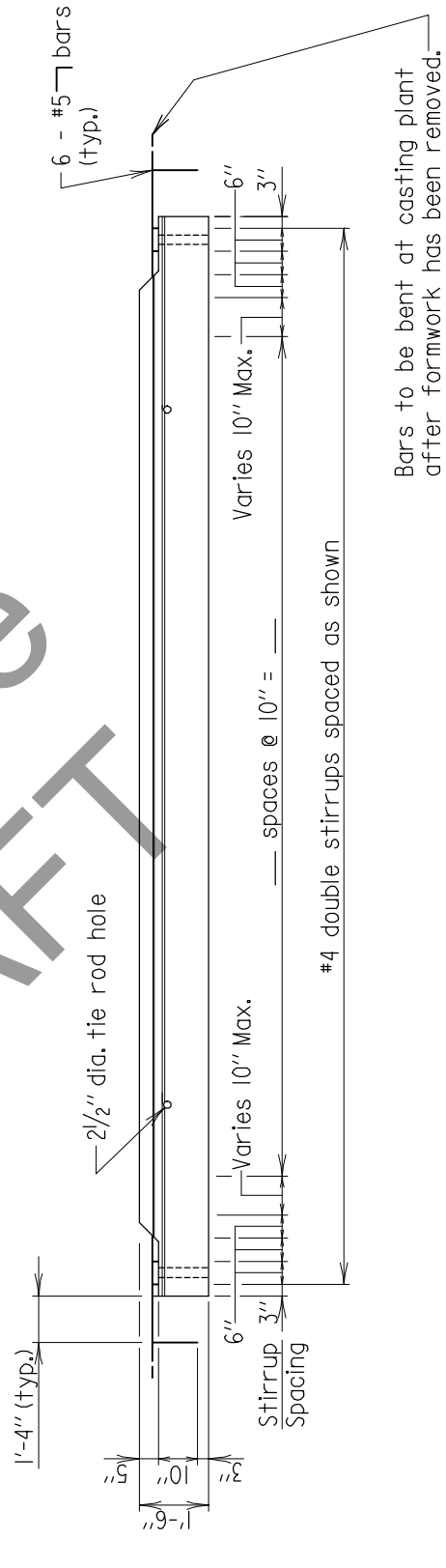

4'-0" INTERIOR SLAB ELEVATION
Scale: 1/4" = 1'-0"

Notes:

1. Extreme care shall be used in locating tie rod holes during the casting operation. Contractor shall assemble the slab units for the entire bridge width at the casting plant to ensure that there is no hole misalignment prior to shipping slab units to the site. Any misalignment of the holes will be cause for rejection of the slab unit. Drilling or coring of the slabs to create new or modified cast holes is prohibited.
2. Adjust curb rebar and stirrup spacing as needed to avoid tie rod hole and railing anchor bolts (if applicable).
3. All reinforcing steel to be epoxy coated.

Useable DRAFT

* USEABLE DRAFT *

APPROVAL	
_____ DIRECTOR OFFICE OF STRUCTURES	
DATE: 09/01/15	
REVISIONS	
SHA	FHWA

FHWA APPROVAL
DATE:

STATE OF MARYLAND
DEPARTMENT OF TRANSPORTATION
STATE HIGHWAY ADMINISTRATION
OFFICE OF STRUCTURES

SIMPLE SPAN GREATER THAN 25'-0" TO 30'-0"
INTERIOR 4'-0" PRECAST CONCRETE SLAB PANEL
PLAN & ELEVATION

NO. SUP-SLAB(4FT)-301 SHEET 1 OF 2

SUPERSTRUCTURE SLABS

For stage construction Type B tie rod recess may be required. For location see Slab Layout sheet in Plans

Roughened surface in accordance with Section 440.03.14 for concrete overlay

See Shear Key Detail Std. No. SUP-SLAB-501

6 - #5's placed as shown

℄ 2½" dia. tie rod hole

#4 double stirrups placed in pairs @ 10" c/c, see Plans.

22 - ½" dia. strands placed as shown

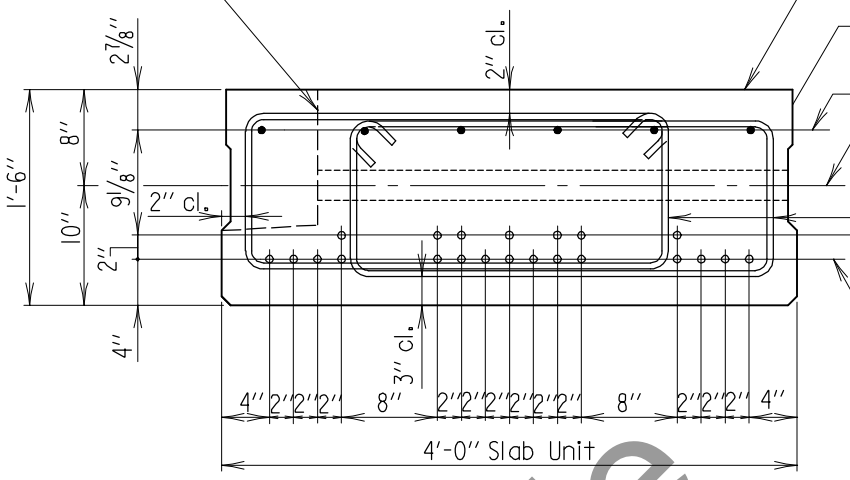

Note:
For location of tie rod holes, see contract plans.

SECTION - SLAB AT MIDSPAN
Scale: ¾" = 1'-0"

Roughened surface in accordance with Section 440.03.14 for concrete overlay

2½" dia. dowel bar holes

6 - #5's placed as shown

#4 double stirrups placed in pairs see Plans for spacing at ends.

22 - ½" dia. strands placed as shown

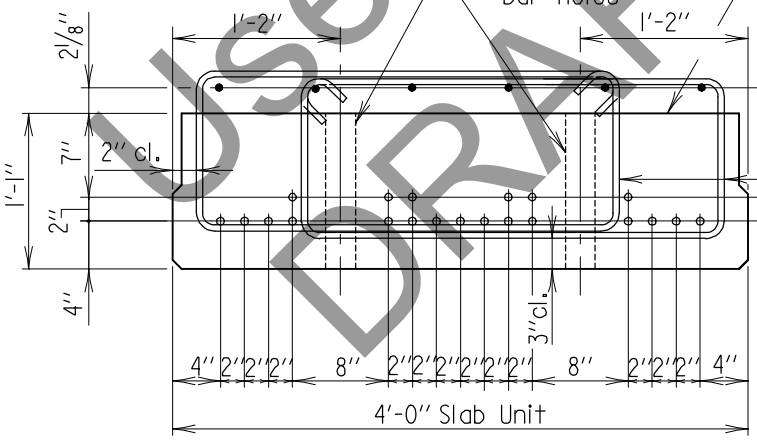

Note:
Any misplaced dowel bar holes or tie rod holes will be cause for rejection of the precast slab unit.

SECTION - SLAB AT ENDS
Scale: ¾" = 1'-0"

Useable DRAFT

Notes:
1. All reinforcing steel to be epoxy coated.
2. Adjust stirrup spacing to avoid tie rod holes as needed.

* USEABLE DRAFT *

APPROVAL	
_____ DIRECTOR OFFICE OF STRUCTURES DATE: 09/01/15	
REVISIONS	
SHA	FHWA

FHWA APPROVAL
DATE:

STATE OF MARYLAND
DEPARTMENT OF TRANSPORTATION
STATE HIGHWAY ADMINISTRATION
OFFICE OF STRUCTURES

SIMPLE SPAN GREATER THAN 25'-0" TO 30'-0"
INTERIOR 4'-0" PRECAST CONCRETE SLAB PANEL SECTIONS

NO. SUP-SLAB(4FT)-301 SHEET 2 OF 2

SUPERSTRUCTURE SLABS

Notes:

1. Extreme care shall be used in locating tie rod holes during the casting operation. Contractor shall assemble the slab units for the entire bridge width at the casting plant to ensure that there is no hole misalignment prior to shipping slab units to the site. Any misalignment of the holes will be cause for rejection of the slab unit. Drilling or coring of the slabs to create new or modified cast holes is prohibited.
2. Adjust curb rebar and stirrup spacing as needed to avoid tie rod hole and railing anchor bolts (if applicable).
3. All reinforcing steel to be epoxy coated.

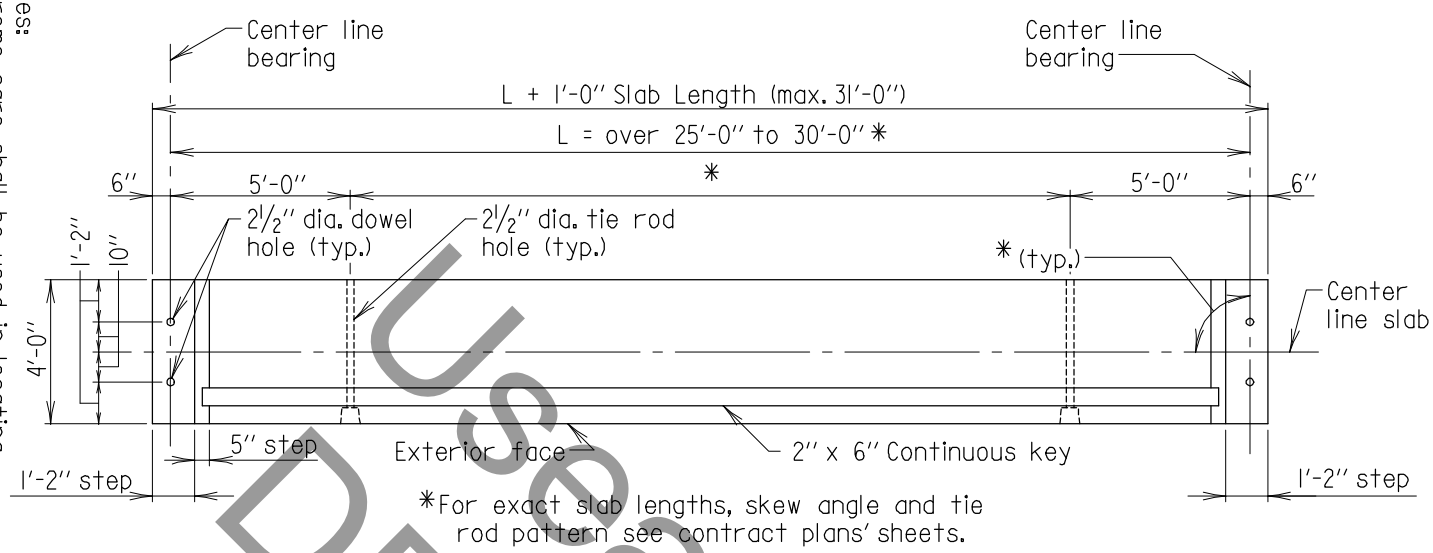

Note:
Stirrup spacing shown is for a 90° crossing. For bridges with other skew angles, see Std. No. SUP-SLAB(4FT)-303 for details of skewed ends.

Note:
Reinforcing steel at ends of slab and curb reinforcing not shown for clarity.

4'-0" EXTERIOR SLAB PLAN
Scale: 3/16" = 1'-0"

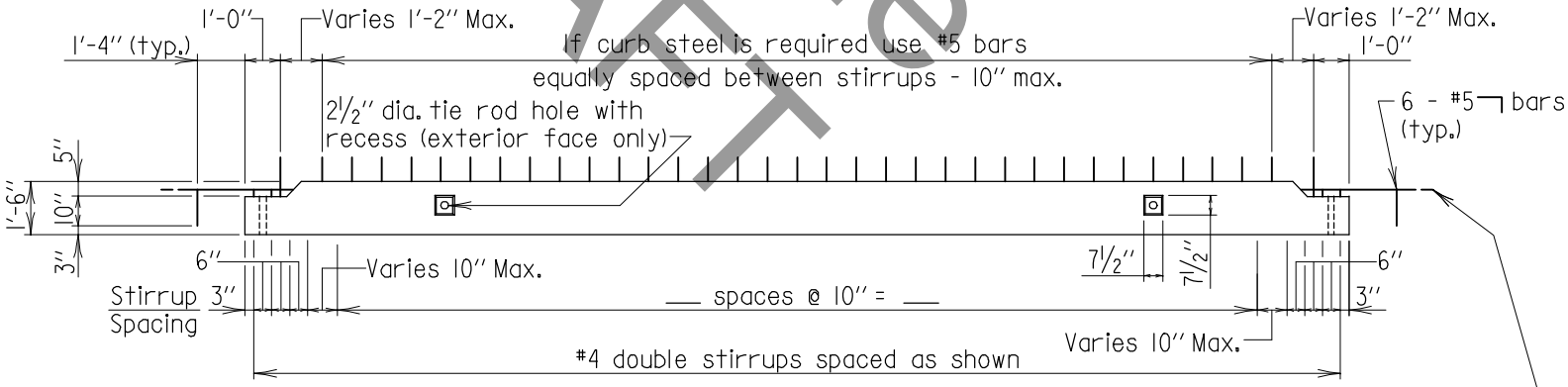

4'-0" EXTERIOR SLAB ELEVATION
Scale: 3/16" = 1'-0"

Usable DRAFT

APPROVAL
DIRECTOR OFFICE OF STRUCTURES
DATE: 09/01/15

REVISIONS
SHA | FHWA

FHWA APPROVAL
DATE:

STATE OF MARYLAND
DEPARTMENT OF TRANSPORTATION
STATE HIGHWAY ADMINISTRATION
OFFICE OF STRUCTURES

SIMPLE SPAN GREATER THAN 25'-0" TO 30'-0"
EXTERIOR 4'-0" PRECAST CONCRETE SLAB PANEL
PLAN & ELEVATION

NO. SUP-SLAB(4FT)-302

SHEET 1 OF 2

* USEABLE DRAFT *

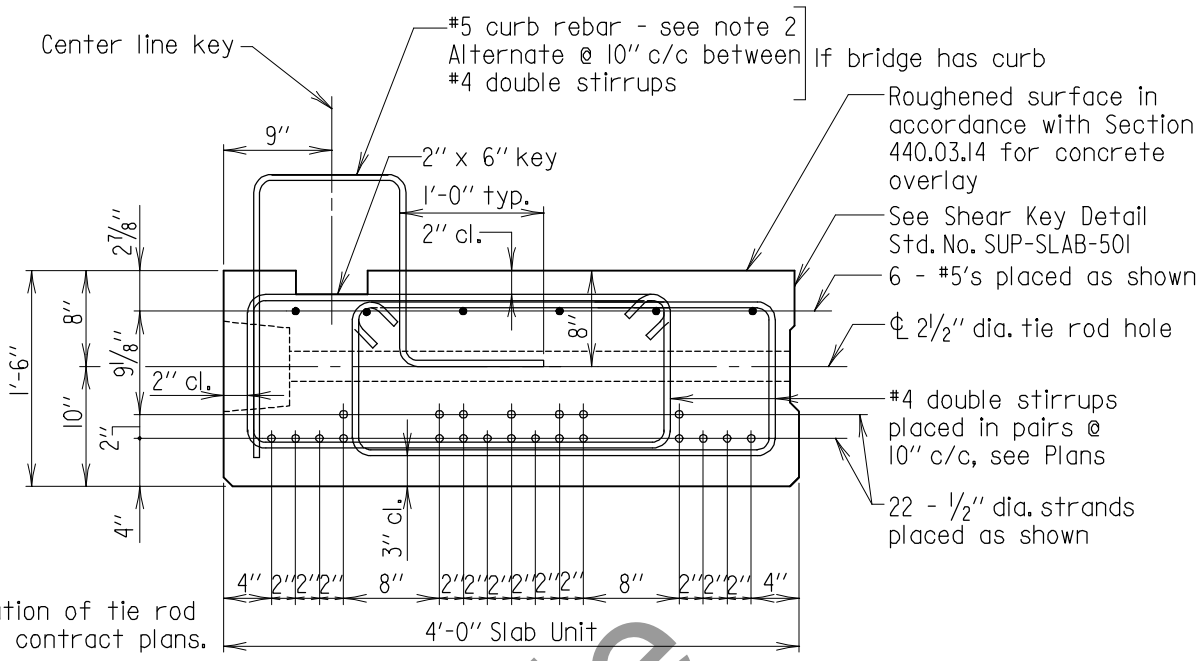

Notes:

1. For location of tie rod holes, see contract plans.

2. For location of curb reinforcement and anchor bolts and plates to be cast in slab for railing, see Std. No. SUP-TB(TR)-301

SECTION - SLAB AT MIDSPAN

Scale: ¾" = 1'-0"

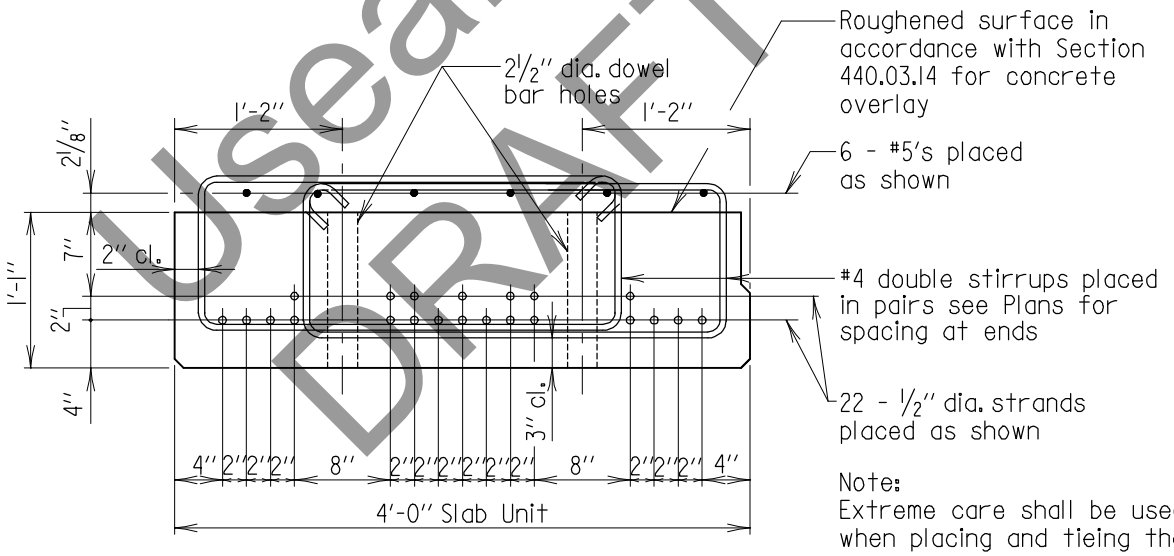

SECTION - SLAB AT ENDS

Scale: ¾" = 1'-0"

Note:
Extreme care shall be used when placing and tieing the curb rebar, railing and anchor bolts assembly to provide for the required clearances. Any misplaced rebar, dowel bar holes, tie rod holes or anchor bolts will be cause for rejection of the precast slab unit.

Useable DRAFT

* USEABLE DRAFT *

APPROVAL	
_____ DIRECTOR OFFICE OF STRUCTURES	
DATE: 09/01/15	
REVISIONS	
SHA	FHWA

FHWA APPROVAL
DATE:

STATE OF MARYLAND
DEPARTMENT OF TRANSPORTATION
STATE HIGHWAY ADMINISTRATION
OFFICE OF STRUCTURES

SIMPLE SPAN GREATER THAN 25'-0" TO 30'-0"
EXTERIOR 4'-0" PRECAST CONCRETE SLAB PANEL SECTIONS

NO. SUP-SLAB(4FT)-302 SHEET 2 OF 2

SUPERSTRUCTURE SLABS

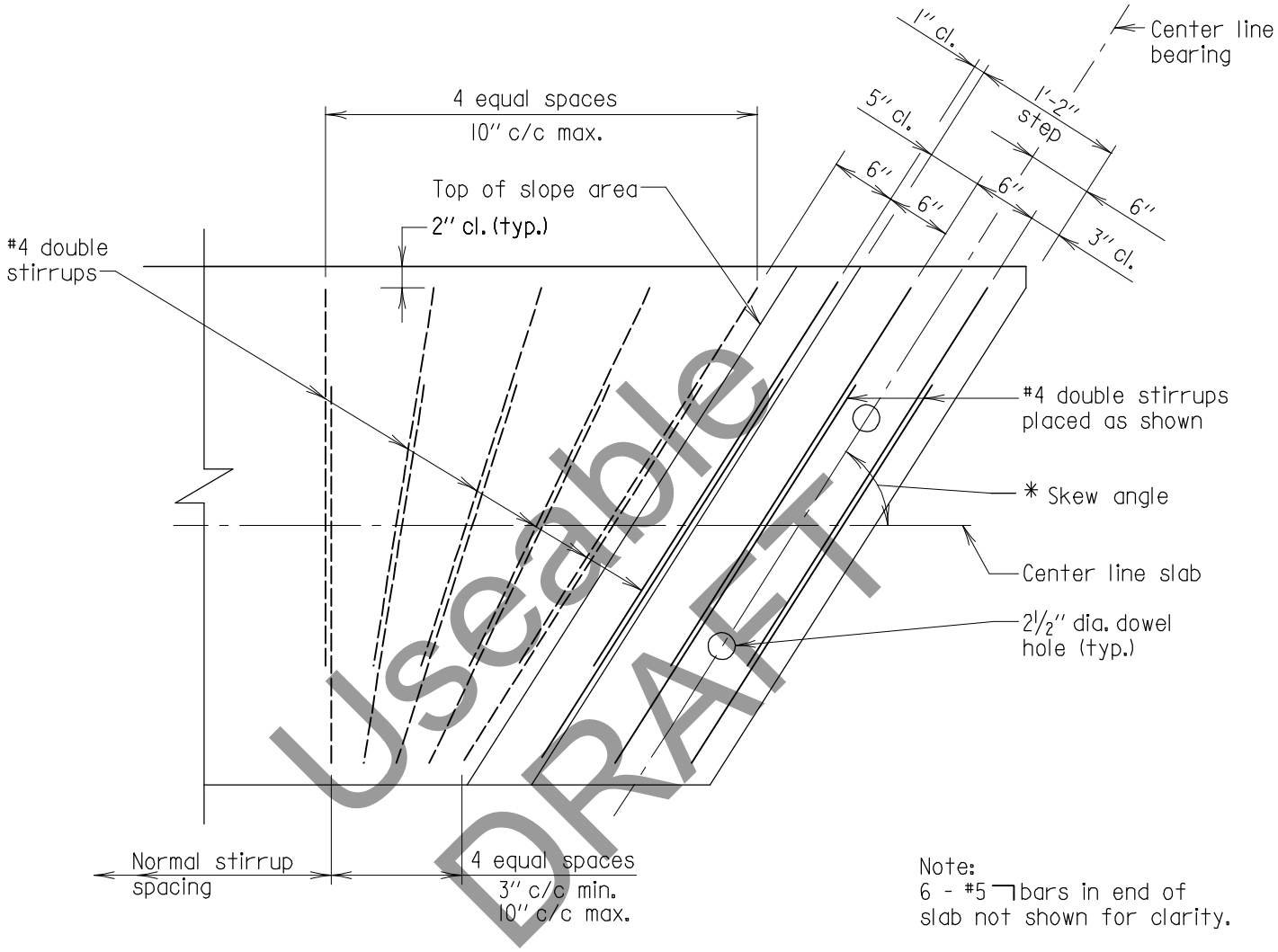

Useable DRAFT

Note:
6 - #5 ⌉ bars in end of slab not shown for clarity.

*For exact skew angle, see contract plan sheets.

PLAN
Scale: 3/4'' = 1'-0''

Note to Fabricator:
End stirrup spacing must be laid out to determine spacing.

Note to Designer:
Layout shown works up to a skew angle of 55°. For angles less than 55° designer must layout skewed end detail on plans.

* USEABLE DRAFT *

Note:
All reinforcing steel to be epoxy coated.

APPROVAL	
_____ DIRECTOR OFFICE OF STRUCTURES DATE: 09/01/15	
REVISIONS	
SHA	FHWA
FHWA APPROVAL	
DATE:	

STATE OF MARYLAND
DEPARTMENT OF TRANSPORTATION
STATE HIGHWAY ADMINISTRATION
OFFICE OF STRUCTURES

SIMPLE SPAN GREATER THAN 25'-0'' TO 30'-0''
INTERIOR 4'-0'' PRECAST CONCRETE SLAB PANEL
SKEWED END DETAIL

NO. SUP-SLAB(4FT)-303 SHEET 1 OF 2

SUPERSTRUCTURE SLABS

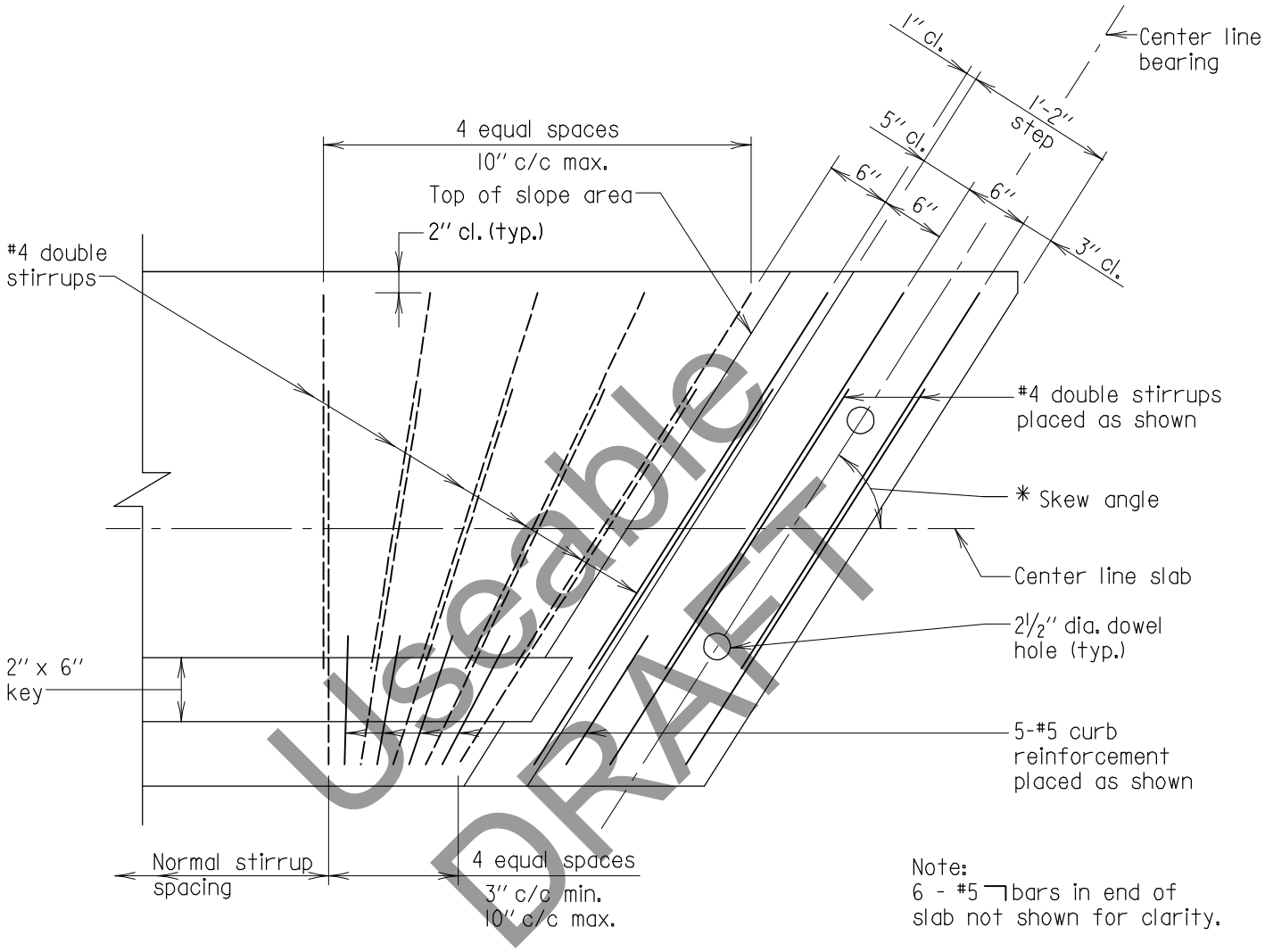

Useable DRAFT

Note:
6 - #5 ⌉ bars in end of slab not shown for clarity.

*For exact skew angle, see contract plan sheets.

PLAN
Scale: ¾'' = 1'-0''

Note to Fabricator:
End stirrup spacing must be laid out to determine spacing.

Note to Designer:
Layout shown works up to a skew angle of 55°. For angles less than 55° designer must layout skewed end detail on plans.

* USEABLE DRAFT *

Note:
All reinforcing steel to be epoxy coated.

APPROVAL	
_____ DIRECTOR OFFICE OF STRUCTURES DATE: 09/01/15	
REVISIONS	
SHA	FHWA
FHWA APPROVAL	
DATE:	

STATE OF MARYLAND
DEPARTMENT OF TRANSPORTATION
STATE HIGHWAY ADMINISTRATION
OFFICE OF STRUCTURES

SIMPLE SPAN GREATER THAN 25'-0'' TO 30'-0''
EXTERIOR 4'-0'' PRECAST CONCRETE SLAB PANEL
SKEWED END DETAIL

NO. SUP-SLAB(4FT)-303 SHEET 2 OF 2

SUPERSTRUCTURE SLABS

Notes:

1. Extreme care shall be used in locating tie rod holes during the casting operation. Contractor shall assemble the slab units for the entire bridge width at the casting plant to ensure that there is no hole misalignment prior to shipping slab units to the site. Any misalignment of the holes will be cause for rejection of the slab unit. Drilling or coring of the slabs to create new or modified cast holes is prohibited.
2. Adjust curb rebar and stirrup spacing as needed to avoid tie rod hole and railing anchor bolts (if applicable).
3. All reinforcing steel to be epoxy coated.

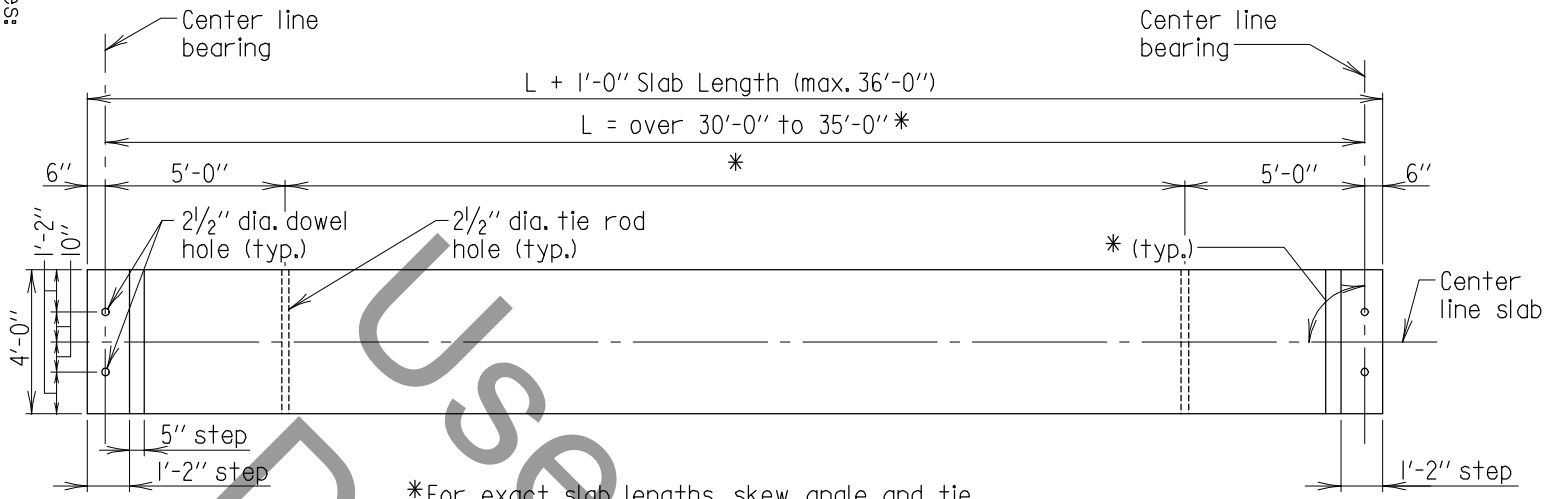

*For exact slab lengths, skew angle and tie rod pattern see contract plans' sheets.

Note:
Stirrup spacing shown is for a 90° crossing. For bridges with other skew angles, see Std. No. SUP-SLAB(4FT)-403 for details of skewed ends.

4'-0" INTERIOR SLAB PLAN
Scale: 3/16" = 1'-0"

Note:
Reinforcing steel at ends of slab not shown for clarity.

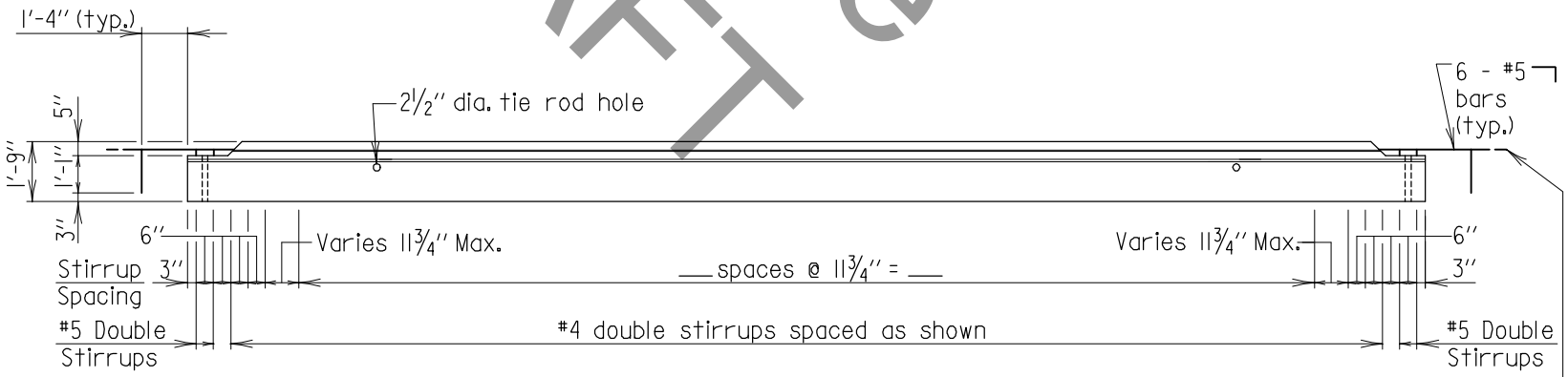

Bars to be bent at casting plant after formwork has been removed.

4'-0" INTERIOR SLAB ELEVATION
Scale: 3/16" = 1'-0"

Useable DRAFT

FHWA APPROVAL
DATE:

APPROVAL
OFFICE OF STRUCTURES DIRECTOR
DATE: 09/01/15

REVISIONS
SHA FHWA

STATE OF MARYLAND
DEPARTMENT OF TRANSPORTATION
STATE HIGHWAY ADMINISTRATION
OFFICE OF STRUCTURES

SIMPLE SPAN GREATER THAN 30'-0" TO 35'-0"
INTERIOR 4'-0" PRECAST CONCRETE SLAB PANEL
PLAN & ELEVATION

NO. SUP-SLAB(4FT)-401 SHEET 1 OF 2

* USEABLE DRAFT *

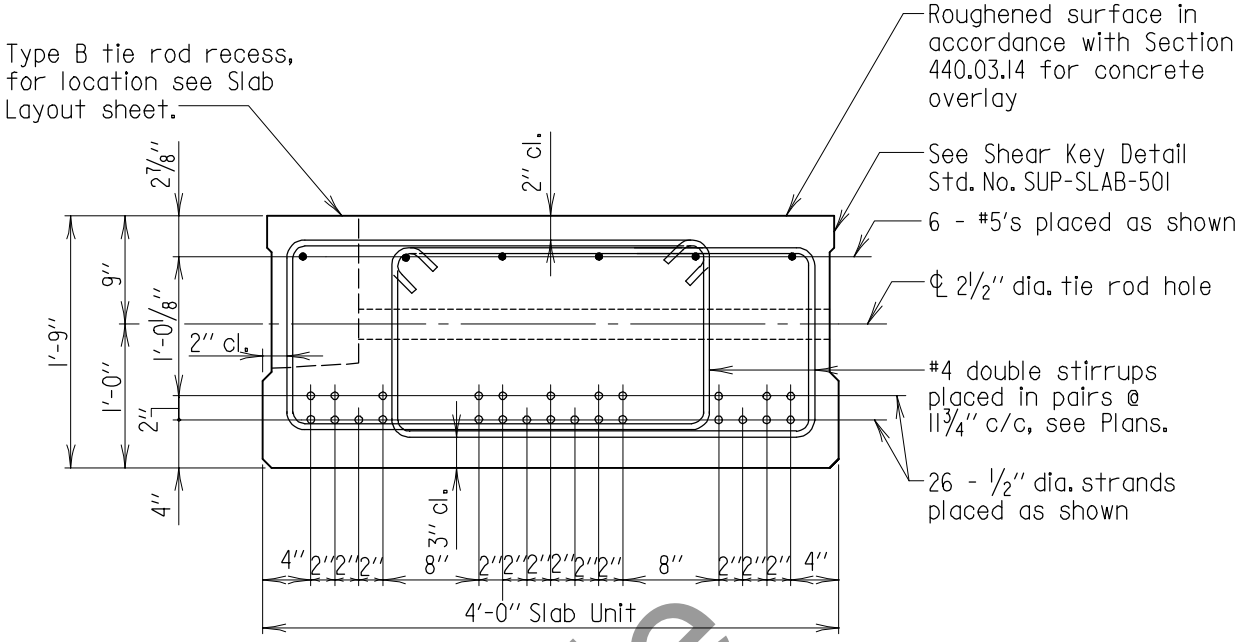

Note:
For location of tie rod holes, see contract plans.

SECTION - SLAB AT MIDSPAN
Scale: ¾" = 1'-0"

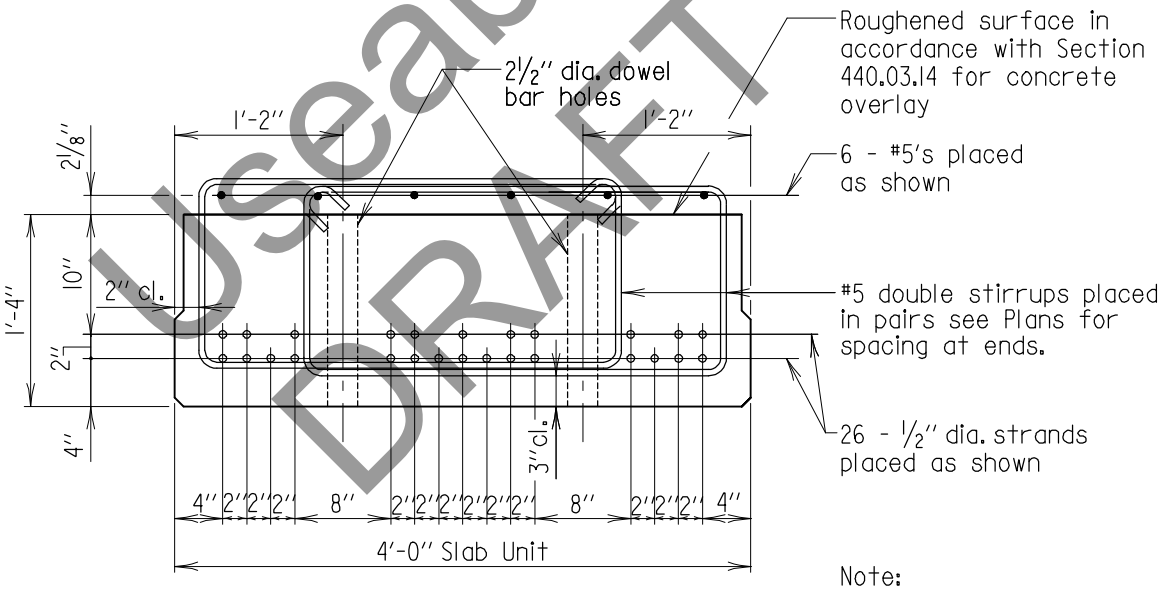

Note:
Any misplaced dowel bar holes or tie rod holes will be cause for rejection of the precast slab unit.

SECTION - SLAB AT ENDS
Scale: ¾" = 1'-0"

Useable DRAFT

* USEABLE DRAFT *

APPROVAL	
_____ DIRECTOR OFFICE OF STRUCTURES DATE: 09/01/15	
REVISIONS	
SHA	FHWA

FHWA APPROVAL
DATE:

STATE OF MARYLAND
DEPARTMENT OF TRANSPORTATION
STATE HIGHWAY ADMINISTRATION
OFFICE OF STRUCTURES

SIMPLE SPAN GREATER THAN 30'-0" TO 35'-0"
INTERIOR 4'-0" PRECAST CONCRETE SLAB PANEL SECTIONS

NO. SUP-SLAB(4FT)-401 SHEET 2 OF 2

SUPERSTRUCTURE SLABS

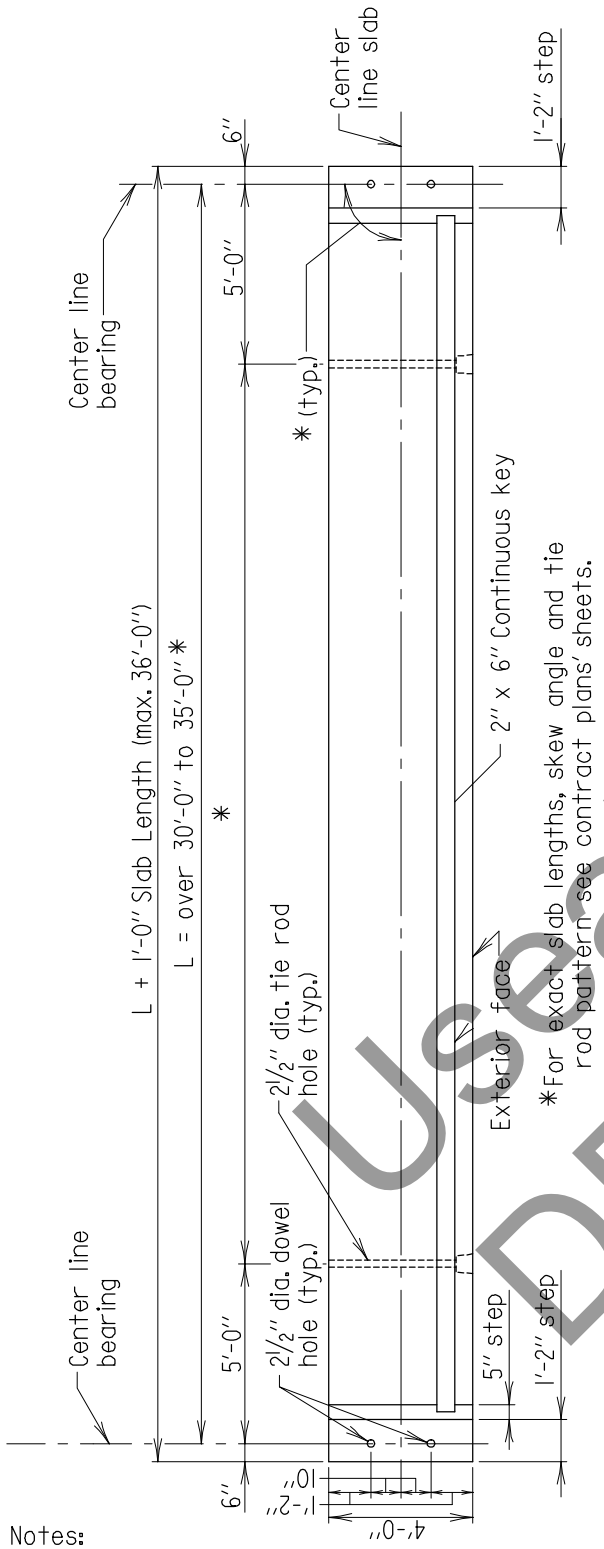

4'-0" EXTERIOR SLAB PLAN
Scale: 3/16" = 1'-0"

Note:
Reinforcing steel at ends of slab and curb reinforcing not shown for clarity.

Note:
Stirrup spacing shown is for a 90° crossing. For bridges with other skew angles, see Std. No. SUP-SLAB(4FT)-403 for details of skewed ends.

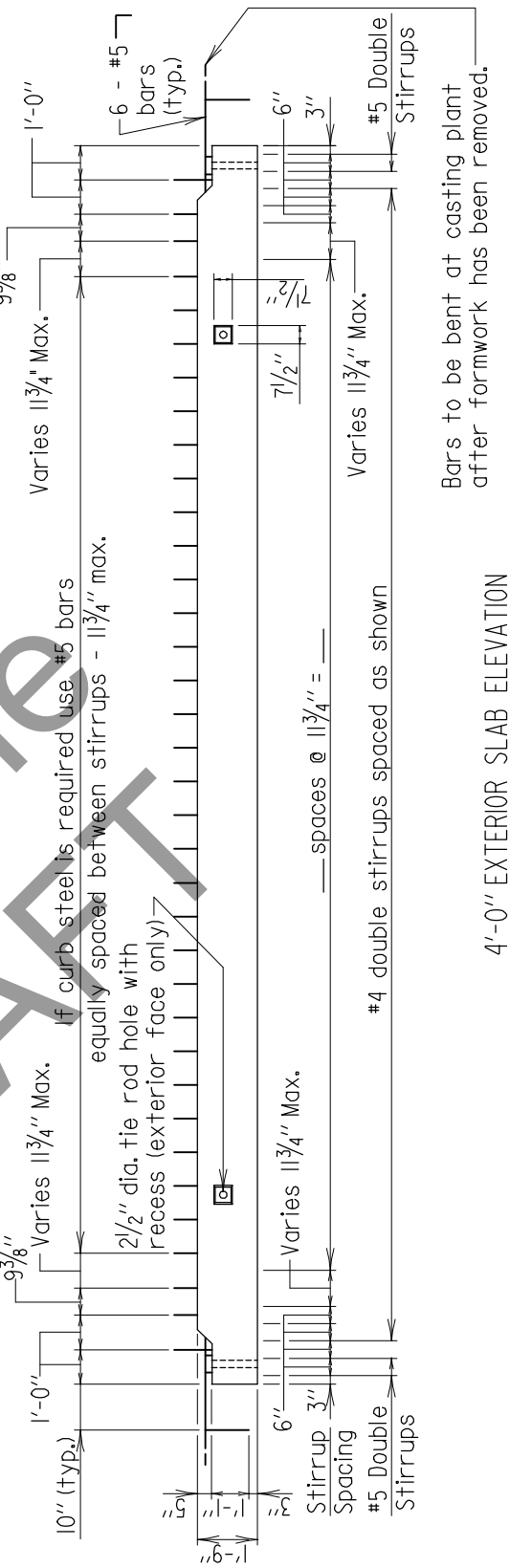

4'-0" EXTERIOR SLAB ELEVATION
Scale: 3/16" = 1'-0"

Notes:

1. Extreme care shall be used in locating tie rod holes during the casting operation. Contractor shall assemble the slab units for the entire bridge width at the casting plant to ensure that there is no hole misalignment prior to shipping slab units to the site. Any misalignment of the holes will be cause for rejection of the slab unit. Drilling or coring of the slabs to create new or modified cast holes is prohibited.
2. Adjust curb rebar and stirrup spacing as needed to avoid tie rod hole and railing anchor bolts (if applicable).
3. All reinforcing steel to be epoxy coated.

Useable DRAFT

* USEABLE DRAFT *

APPROVAL	
_____ DIRECTOR OFFICE OF STRUCTURES	
DATE: 09/01/15	
REVISIONS	
SHA	FHWA

FHWA APPROVAL
DATE:

STATE OF MARYLAND
DEPARTMENT OF TRANSPORTATION
STATE HIGHWAY ADMINISTRATION
OFFICE OF STRUCTURES

SIMPLE SPAN GREATER THAN 30'-0" TO 35'-0"
EXTERIOR 4'-0" PRECAST CONCRETE SLAB PANEL
PLAN & ELEVATION

NO. SUP-SLAB(4FT)-402 SHEET 1 OF 2

SUPERSTRUCTURE SLABS

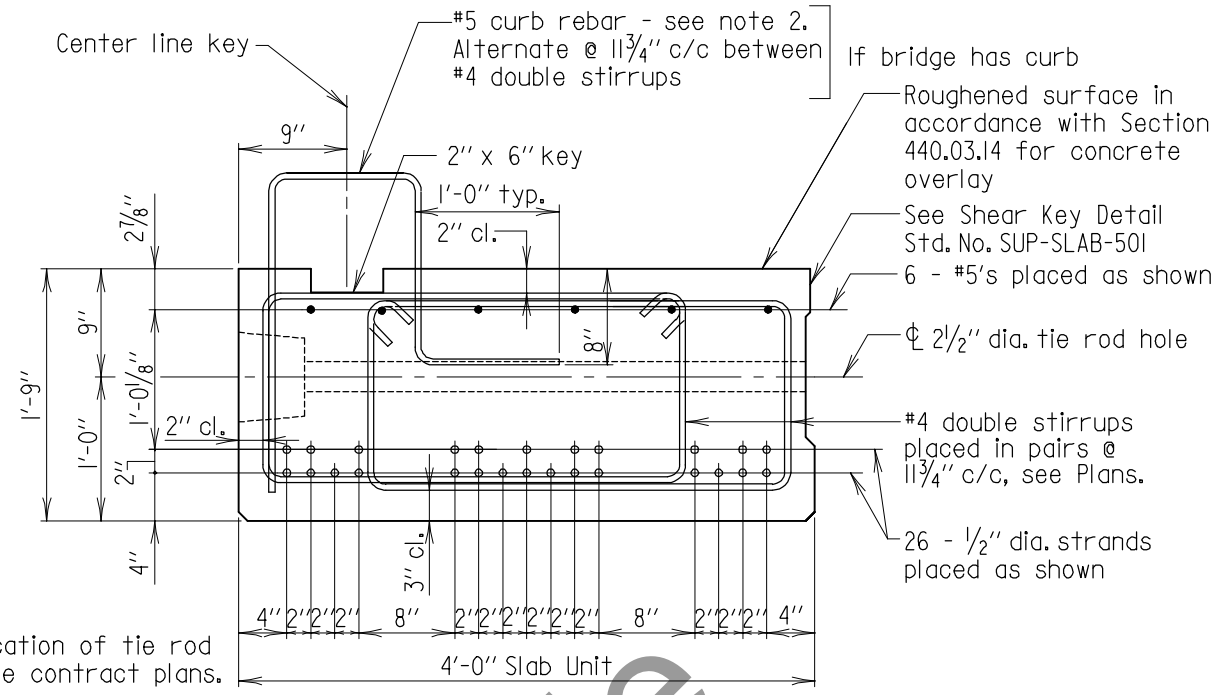

Notes:

1. For location of tie rod holes, see contract plans.

2. For location of curb reinforcement and anchor bolts and plates to be cast in slab for railing, see Std. No. SUP-TB(TR)-301

SECTION - SLAB AT MIDSPAN

Scale: ¾" = 1'-0"

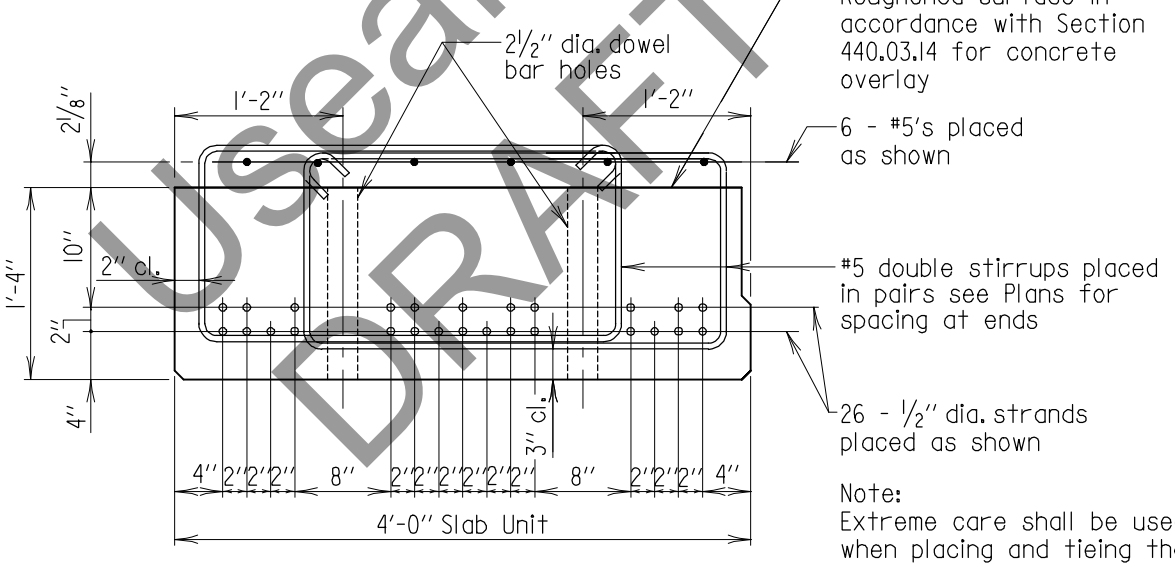

SECTION - SLAB AT ENDS

Scale: ¾" = 1'-0"

Note:
Extreme care shall be used when placing and tieing the curb rebar, railing and anchor bolts assembly to provide for the required clearances. Any misplaced rebar, dowel bar holes, tie rod holes or anchor bolts will be cause for rejection of the precast slab unit.

Useable DRAFT

* USEABLE DRAFT *

APPROVAL	
_____ DIRECTOR OFFICE OF STRUCTURES	
DATE: 09/01/15	
REVISIONS	
SHA	FHWA

FHWA APPROVAL
DATE:

STATE OF MARYLAND
DEPARTMENT OF TRANSPORTATION
STATE HIGHWAY ADMINISTRATION
OFFICE OF STRUCTURES

SIMPLE SPAN GREATER THAN 30'-0" TO 35'-0"
EXTERIOR 4'-0" PRECAST CONCRETE SLAB PANEL SECTIONS

NO. SUP-SLAB(4FT)-402 SHEET 2 OF 2

SUPERSTRUCTURE SLABS

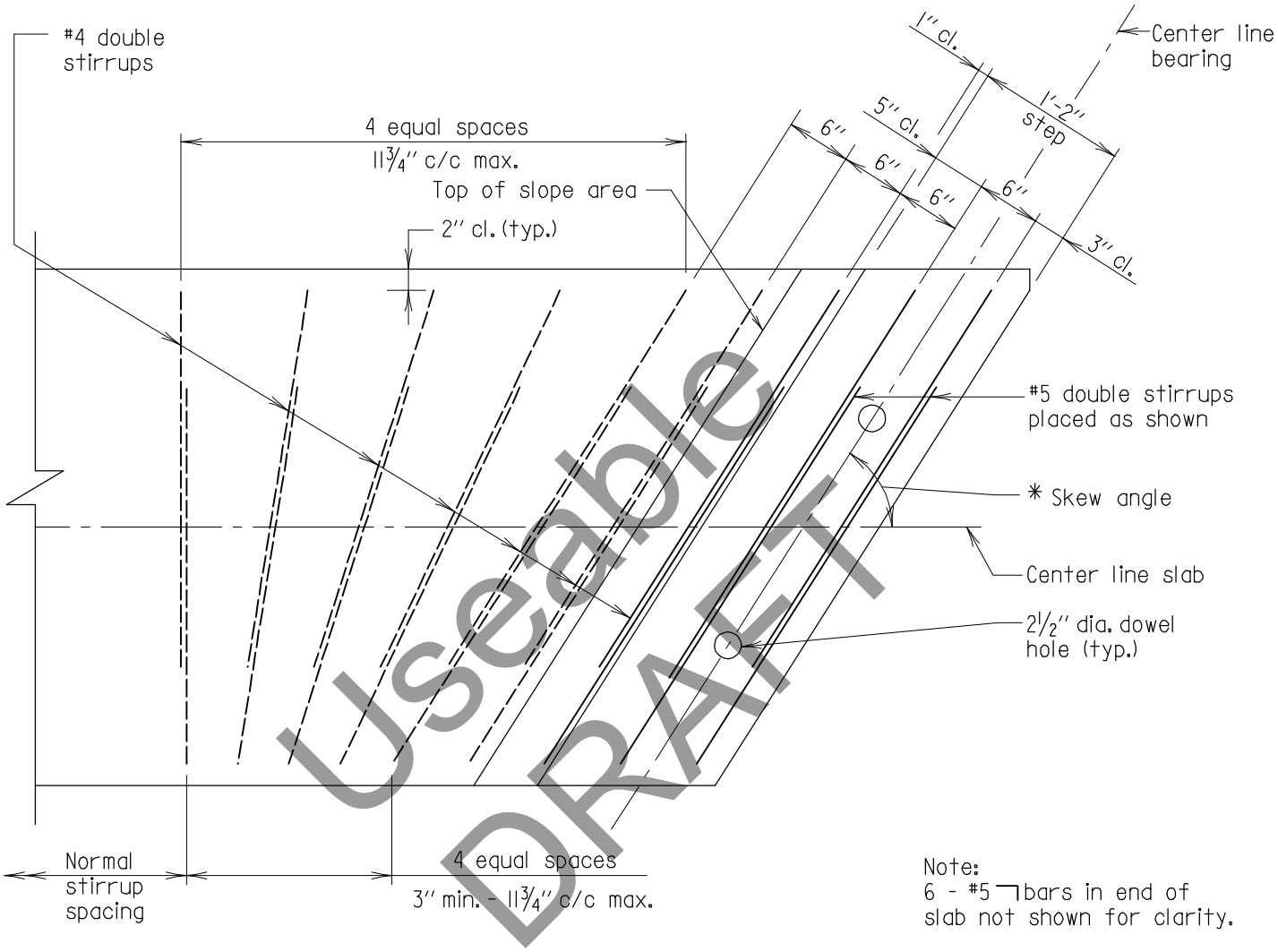

Useable DRAFT

Note:
6 - #5 ⌉ bars in end of slab not shown for clarity.

*For exact skew angle, see contract plan sheets.

PLAN
Scale: ¾" = 1'-0"

Note to Fabricator:
End stirrup spacing must be laid out to determine spacing.

Note to Designer:
Layout shown works up to a skew angle of 55°. For angles less than 55° designer must layout skewed end detail on plans.

* USEABLE DRAFT *

Note:
All reinforcing steel to be epoxy coated.

APPROVAL	
_____ DIRECTOR OFFICE OF STRUCTURES DATE: 09/01/15	
REVISIONS	
SHA	FHWA
FHWA APPROVAL	
DATE:	

STATE OF MARYLAND
DEPARTMENT OF TRANSPORTATION
STATE HIGHWAY ADMINISTRATION
OFFICE OF STRUCTURES

SIMPLE SPAN GREATER THAN 30'-0" TO 35'-0"
INTERIOR 4'-0" PRECAST CONCRETE SLAB PANEL
SKEWED END DETAIL

NO. SUP-SLAB(4FT)-403 SHEET 1 OF 2

SUPERSTRUCTURE SLABS

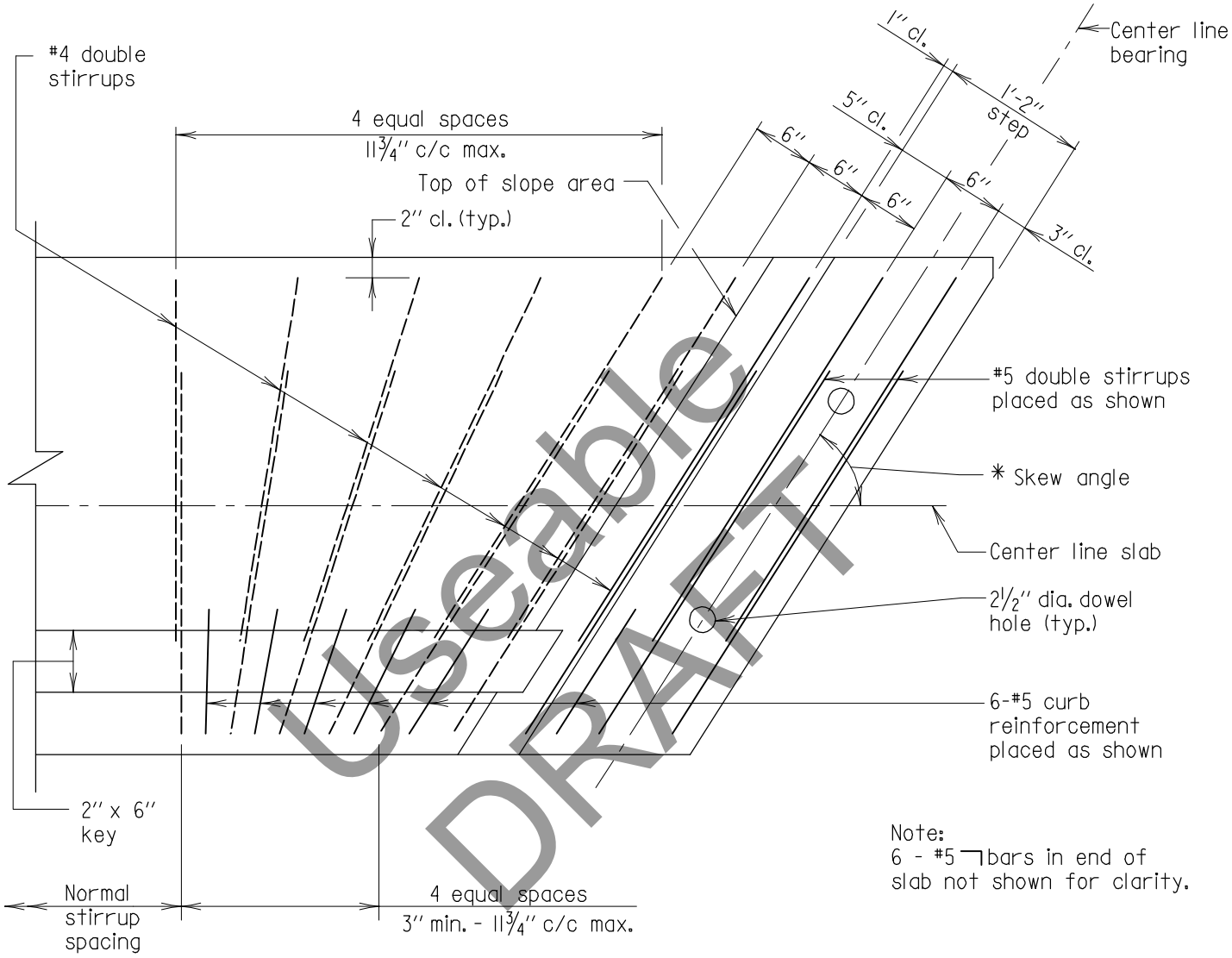

Useable DRAFT

Note:
6 - #5 ⌉ bars in end of slab not shown for clarity.

*For exact skew angle, see contract plan sheets.

PLAN
Scale: ¾'' = 1'-0''

Note to Fabricator:
End stirrup spacing must be laid out to determine spacing.

Note to Designer:
Layout shown works up to a skew angle of 55°. For angles less than 55° designer must layout skewed end detail on plans.

* USEABLE DRAFT *

Note:
All reinforcing steel to be epoxy coated.

APPROVAL	
_____ DIRECTOR OFFICE OF STRUCTURES DATE: 09/01/15	
REVISIONS	
SHA	FHWA

FHWA APPROVAL	
DATE:	

STATE OF MARYLAND
DEPARTMENT OF TRANSPORTATION
STATE HIGHWAY ADMINISTRATION
OFFICE OF STRUCTURES

SIMPLE SPAN GREATER THAN 30'-0'' TO 35'-0''
EXTERIOR 4'-0'' PRECAST CONCRETE SLAB PANEL
SKEWED END DETAIL

NO. SUP-SLAB(4FT)-403 SHEET 2 OF 2

SUPERSTRUCTURE SLABS

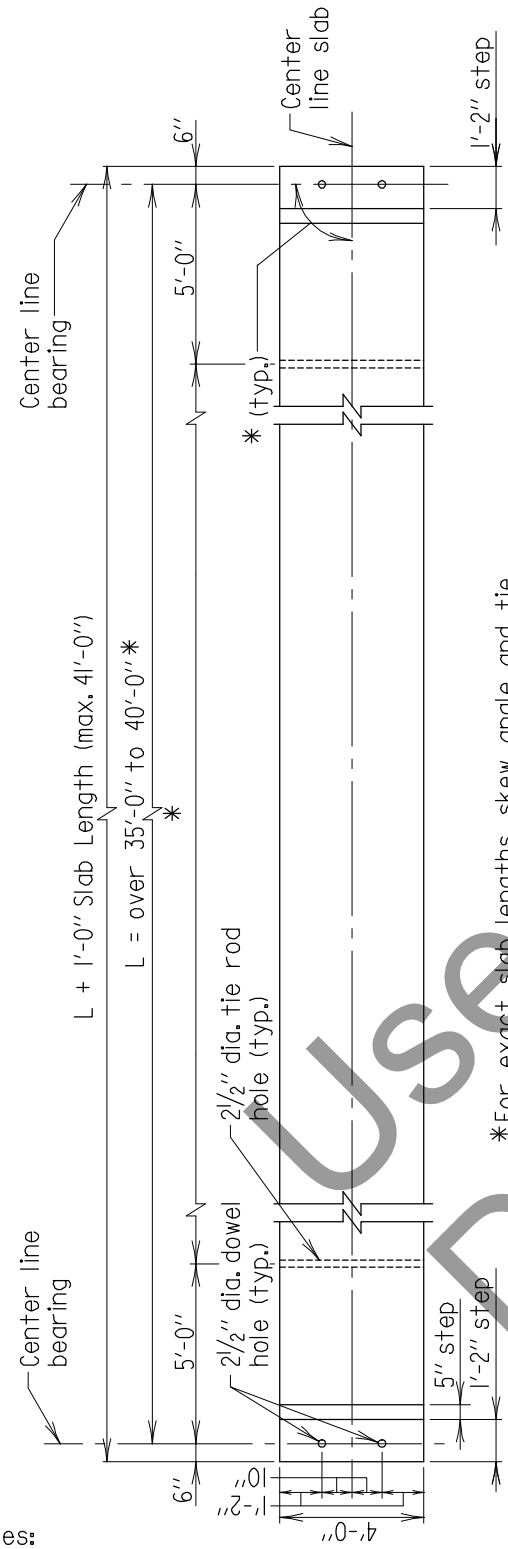

*For exact slab lengths, skew angle and tie rod pattern see contract plans' sheets.

4'-0'' INTERIOR SLAB PLAN
Scale: 3/16'' = 1'-0''

Note:
Stirrup spacing shown is for a 90° crossing. For bridges with other skew angles, see Std. No. SUP-SLAB(4FT)-503 for details of skewed ends.

Note:
Reinforcing steel at ends of slab not shown for clarity.

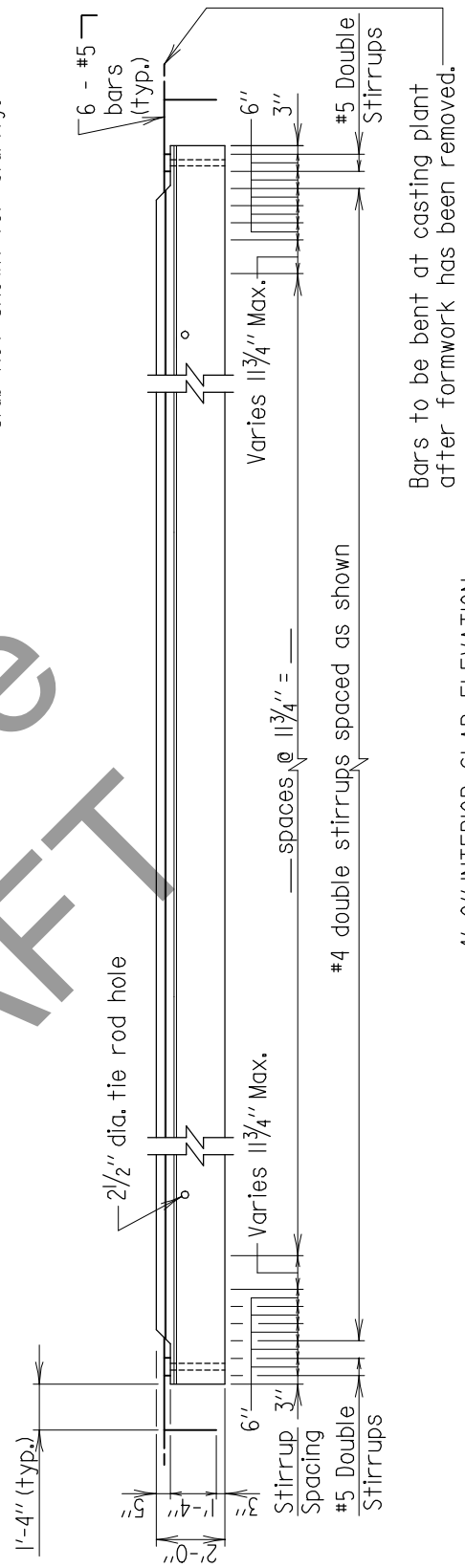

4'-0'' INTERIOR SLAB ELEVATION
Scale: 3/16'' = 1'-0''

Notes:

1. Extreme care shall be used in locating tie rod holes during the casting operation. Contractor shall assemble the slab units for the entire bridge width at the casting plant to ensure that there is no hole misalignment prior to shipping slab units to the site. Any misalignment of the holes will be cause for rejection of the slab unit. Drilling or coring of the slabs to create new or modified cast holes is prohibited.
2. Adjust curb rebar and stirrup spacing as needed to avoid tie rod hole and railing anchor bolts (if applicable).
3. All reinforcing steel to be epoxy coated.

Useable DRAFT

* USEABLE DRAFT *

APPROVAL	
_____ DIRECTOR OFFICE OF STRUCTURES	
DATE: 09/01/15	
REVISIONS	
SHA	FHWA
FHWA APPROVAL	
DATE:	

STATE OF MARYLAND
DEPARTMENT OF TRANSPORTATION
STATE HIGHWAY ADMINISTRATION
OFFICE OF STRUCTURES

SIMPLE SPAN GREATER THAN 35'-0'' TO 40'-0''
INTERIOR 4'-0'' PRECAST CONCRETE SLAB PANEL
PLAN & ELEVATION

NO. SUP-SLAB(4FT)-501 SHEET 1 OF 2

SUPERSTRUCTURE SLABS

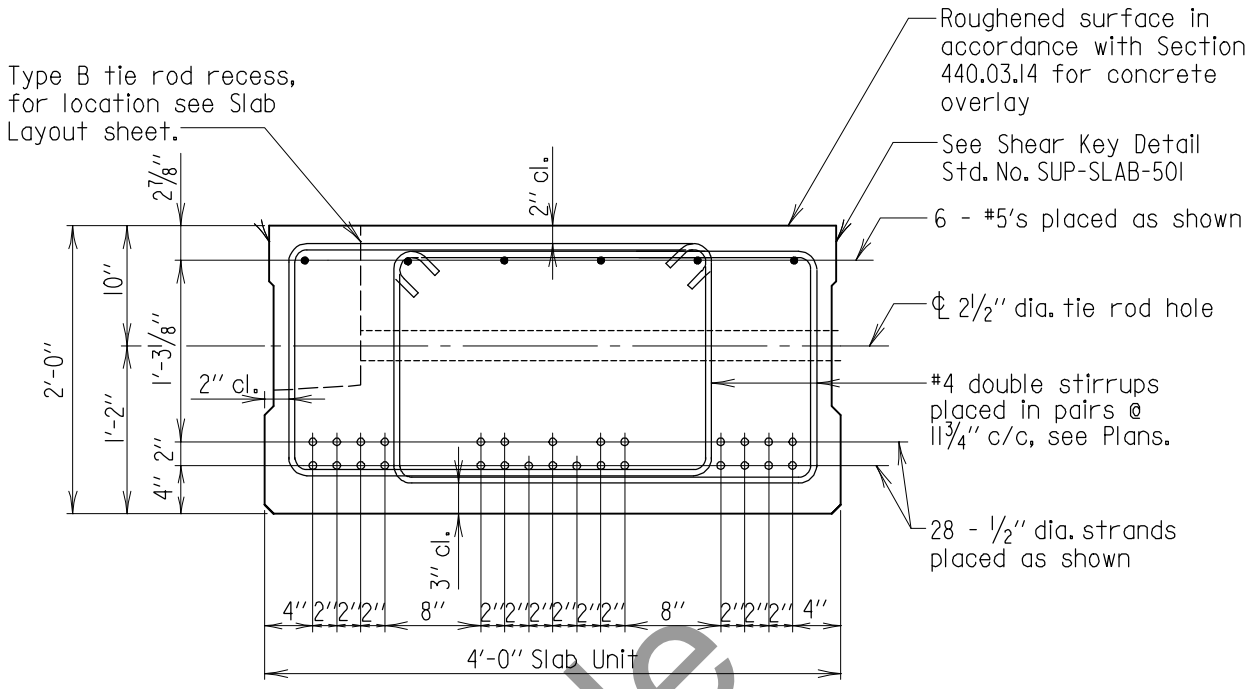

Note:
For location of tie rod holes, see contract plans.

SECTION - SLAB AT MIDSPAN
Scale: ¾" = 1'-0"

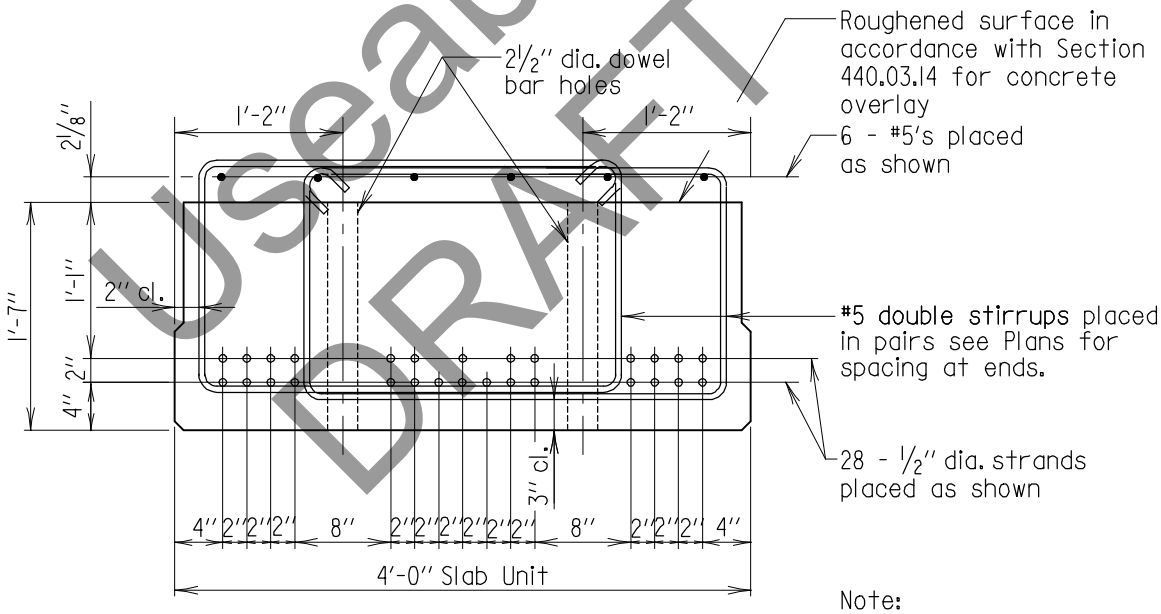

Note:
Any misplaced dowel bar holes or tie rod holes will be cause for rejection of the precast slab unit.

SECTION - SLAB AT ENDS
Scale: ¾" = 1'-0"

Useable DRAFT

* USEABLE DRAFT *

APPROVAL	
_____ DIRECTOR OFFICE OF STRUCTURES DATE: 09/01/15	
REVISIONS	
SHA	FHWA

FHWA APPROVAL
DATE:

STATE OF MARYLAND
DEPARTMENT OF TRANSPORTATION
STATE HIGHWAY ADMINISTRATION
OFFICE OF STRUCTURES

SIMPLE SPAN GREATER THAN 35'-0" TO 40'-0"
INTERIOR 4'-0" PRECAST CONCRETE SLAB PANEL SECTIONS

NO. SUP-SLAB(4FT)-501 SHEET 2 OF 2

SUPERSTRUCTURE SLABS

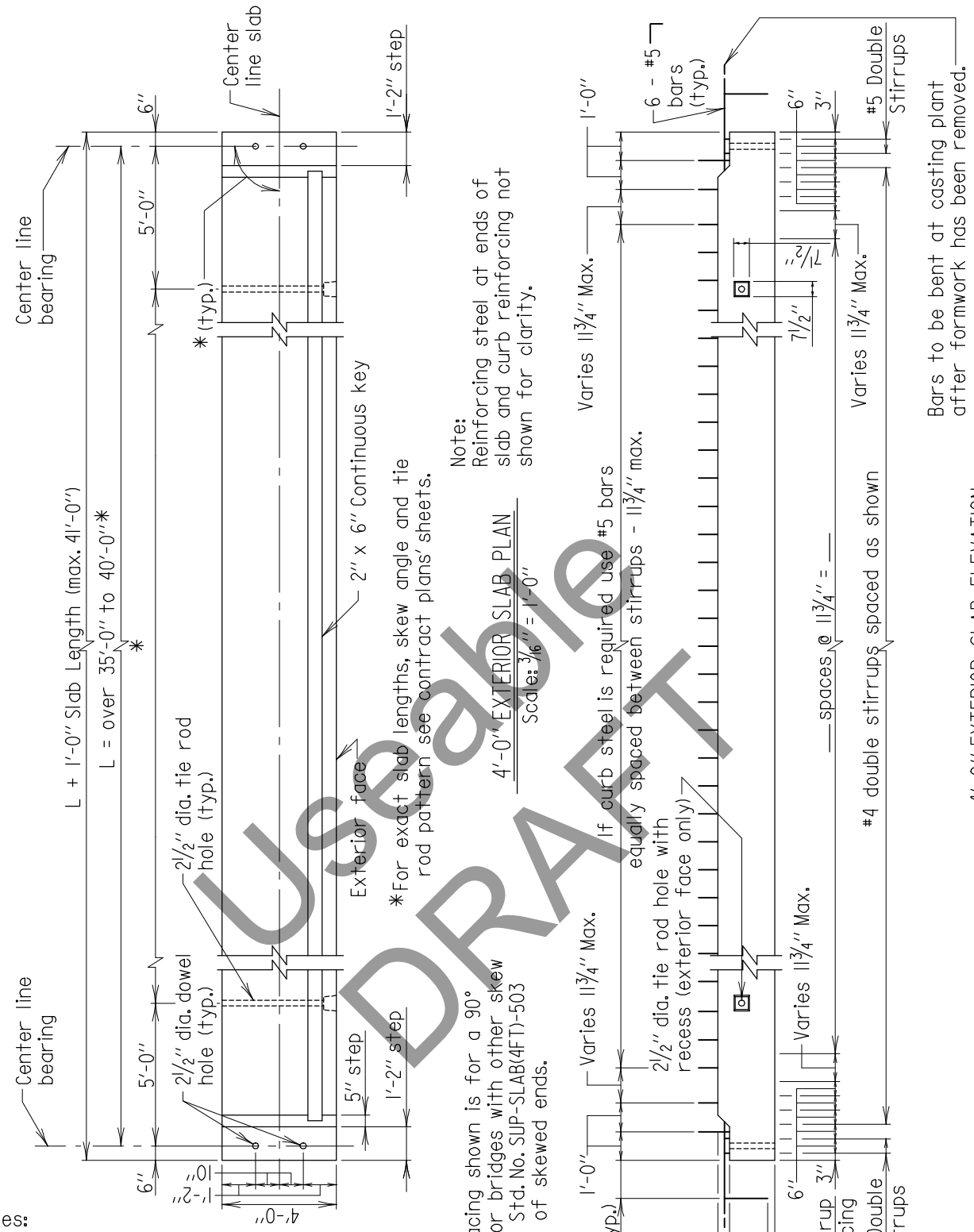

Useable DRAFT

Notes:

1. Extreme care shall be used in locating tie rod holes during the casting operation. Contractor shall assemble the slab units for the entire bridge width at the casting plant to ensure that there is no hole misalignment prior to shipping slab units to the site. Any misalignment of the holes will be cause for rejection of the slab unit. Drilling or coring of the slabs to create new or modified cast holes is prohibited.
2. Adjust curb rebar and stirrup spacing as needed to avoid tie rod hole and railing anchor bolts (if applicable).
3. All reinforcing steel to be epoxy coated.

* USEABLE DRAFT *

APPROVAL	
_____ DIRECTOR OFFICE OF STRUCTURES	
DATE: 09/01/15	
REVISIONS	
SHA	FHWA
FHWA APPROVAL	
DATE:	

STATE OF MARYLAND
DEPARTMENT OF TRANSPORTATION
STATE HIGHWAY ADMINISTRATION
OFFICE OF STRUCTURES

SIMPLE SPAN GREATER THAN 35'-0'' TO 40'-0''
EXTERIOR 4'-0'' PRECAST CONCRETE SLAB PANEL
PLAN & ELEVATION

NO. SUP-SLAB(4FT)-502 SHEET 1 OF 2

SUPERSTRUCTURE SLABS

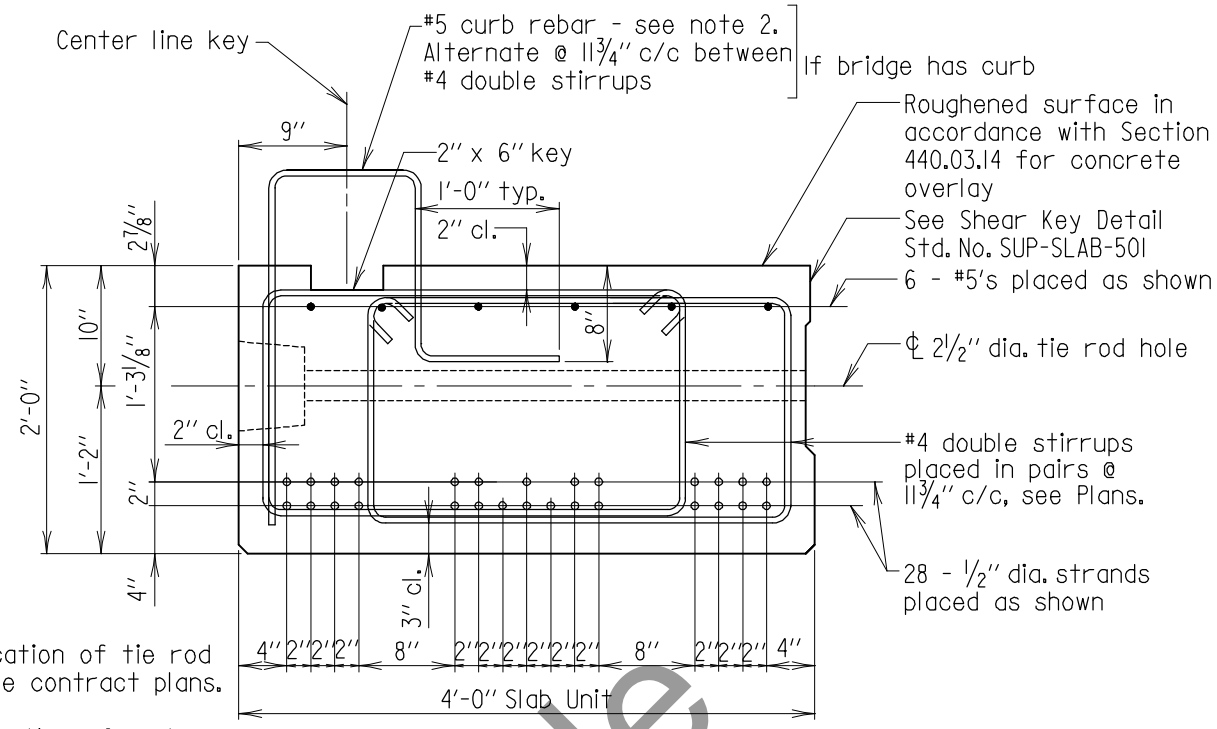

Notes:

1. For location of tie rod holes, see contract plans.

2. For location of curb reinforcement and anchor bolts and plates to be cast in slab for railing, see Std. No. SUP-TB(TR)-301

SECTION - SLAB AT MIDSPAN

Scale: ¾" = 1'-0"

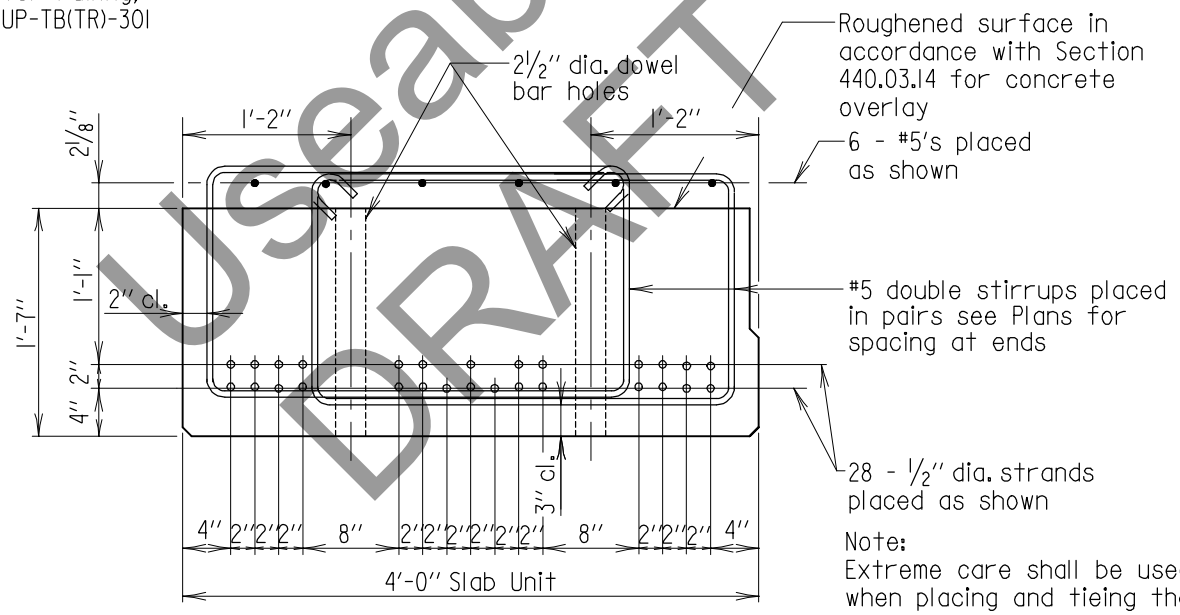

SECTION - SLAB AT ENDS

Scale: ¾" = 1'-0"

Note:
Extreme care shall be used when placing and tieing the curb rebar, railing and anchor bolts assembly to provide for the required clearances. Any misplaced rebar, dowel bar holes, tie rod holes or anchor bolts will be cause for rejection of the precast slab unit.

Useable DRAFT

* USEABLE DRAFT *

APPROVAL	
_____ DIRECTOR OFFICE OF STRUCTURES DATE: 09/01/15	
REVISIONS	
SHA	FHWA

FHWA APPROVAL
DATE:

STATE OF MARYLAND
DEPARTMENT OF TRANSPORTATION
STATE HIGHWAY ADMINISTRATION
OFFICE OF STRUCTURES

SIMPLE SPAN GREATER THAN 35'-0" TO 40'-0"
EXTERIOR 4'-0" PRECAST CONCRETE SLAB PANEL SECTIONS

NO. SUP-SLAB(4FT)-502 SHEET 2 OF 2

SUPERSTRUCTURE SLABS

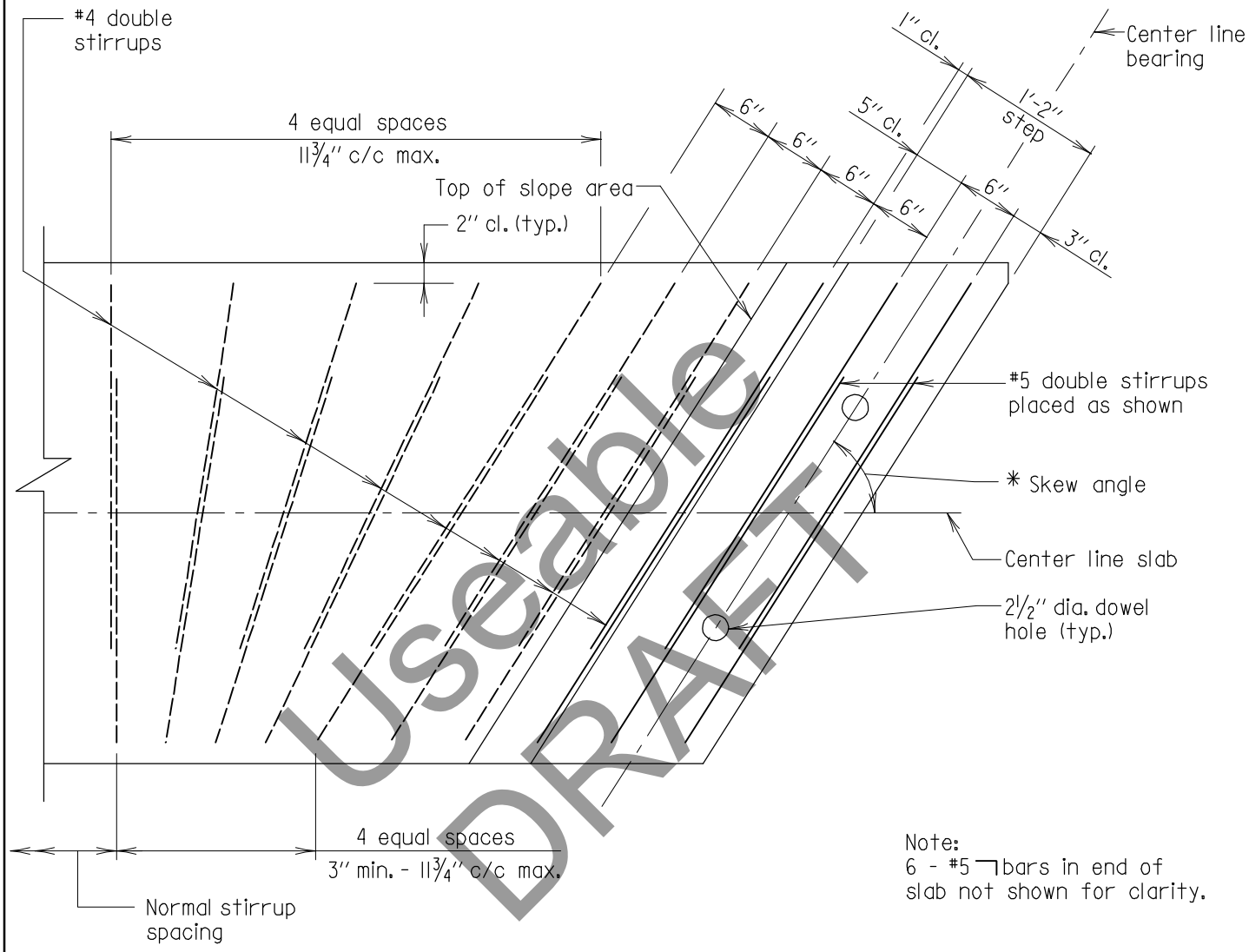

Useable DRAFT

*For exact skew angle, see contract plan sheets.

PLAN
Scale: ¾'' = 1'-0''

Note:
6 - #5 ⌉ bars in end of slab not shown for clarity.

Note to Fabricator:
End stirrup spacing must be laid out to determine spacing.

Note to Designer:
Layout shown works up to a skew angle of 55°. For angles less than 55° designer must layout skewed end detail on plans.

* USEABLE DRAFT *

Note:
All reinforcing steel to be epoxy coated.

APPROVAL	
_____ DIRECTOR OFFICE OF STRUCTURES DATE: 09/01/15	
REVISIONS	
SHA	FHWA
FHWA APPROVAL	
DATE:	

STATE OF MARYLAND
DEPARTMENT OF TRANSPORTATION
STATE HIGHWAY ADMINISTRATION
OFFICE OF STRUCTURES

SIMPLE SPAN GREATER THAN 35'-0'' TO 40'-0''
INTERIOR 4'-0'' PRECAST CONCRETE SLAB PANEL
SKEWED END DETAIL

NO. SUP-SLAB(4FT)-503 SHEET 1 OF 2

SUPERSTRUCTURE SLABS

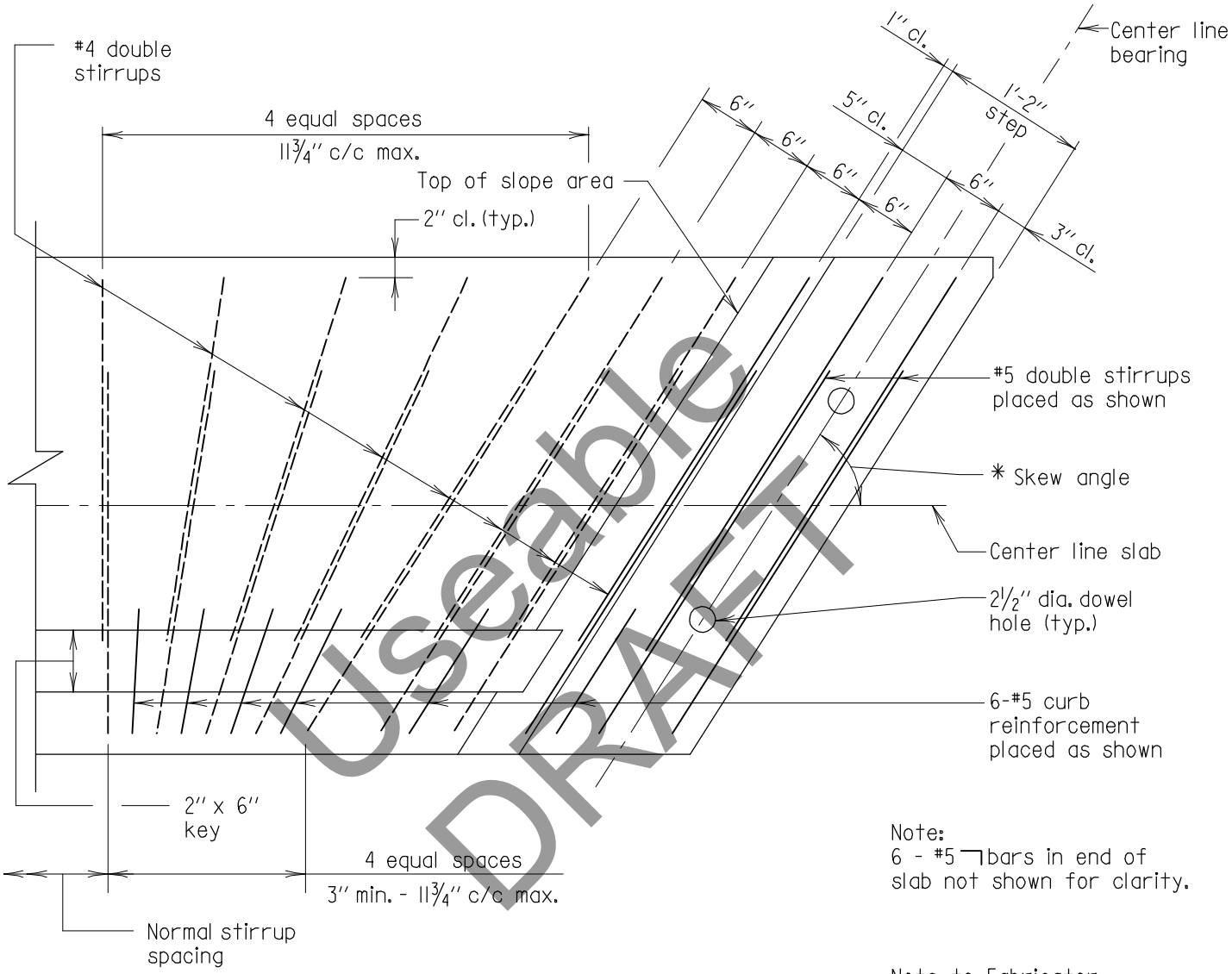

Useable DRAFT

*For exact skew angle, see contract plan sheets.

PLAN
Scale: ¾'' = 1'-0''

Note:
6 - #5 ⌉ bars in end of slab not shown for clarity.

Note to Fabricator:
End stirrup spacing must be laid out to determine spacing.

Note to Designer:
Layout shown works up to a skew angle of 55°. For angles less than 55° designer must layout skewed end detail on plans.

* USEABLE DRAFT *

Note:
All reinforcing steel to be epoxy coated.

APPROVAL	
_____ DIRECTOR OFFICE OF STRUCTURES DATE: 09/01/15	
REVISIONS	
SHA	FHWA
FHWA APPROVAL	
DATE:	

STATE OF MARYLAND
DEPARTMENT OF TRANSPORTATION
STATE HIGHWAY ADMINISTRATION
OFFICE OF STRUCTURES

SIMPLE SPAN GREATER THAN 35'-0'' TO 40'-0''
EXTERIOR 4'-0'' PRECAST CONCRETE SLAB PANEL
SKEWED END DETAIL

NO. SUP-SLAB(4FT)-503 SHEET 2 OF 2

SUPERSTRUCTURE SLABS

Notes:

1. Extreme care shall be used in locating tie rod holes during the casting operation. Contractor shall assemble the slab units for the entire bridge width at the casting plant to ensure that there is no hole misalignment prior to shipping slab units to the site. Any misalignment of the holes will be cause for rejection of the slab unit. Drilling or coring of the slabs to create new or modified cast holes is prohibited.
2. Adjust curb rebar and stirrup spacing as needed to avoid tie rod hole and railing anchor bolts (if applicable).
3. All reinforcing steel to be epoxy coated.

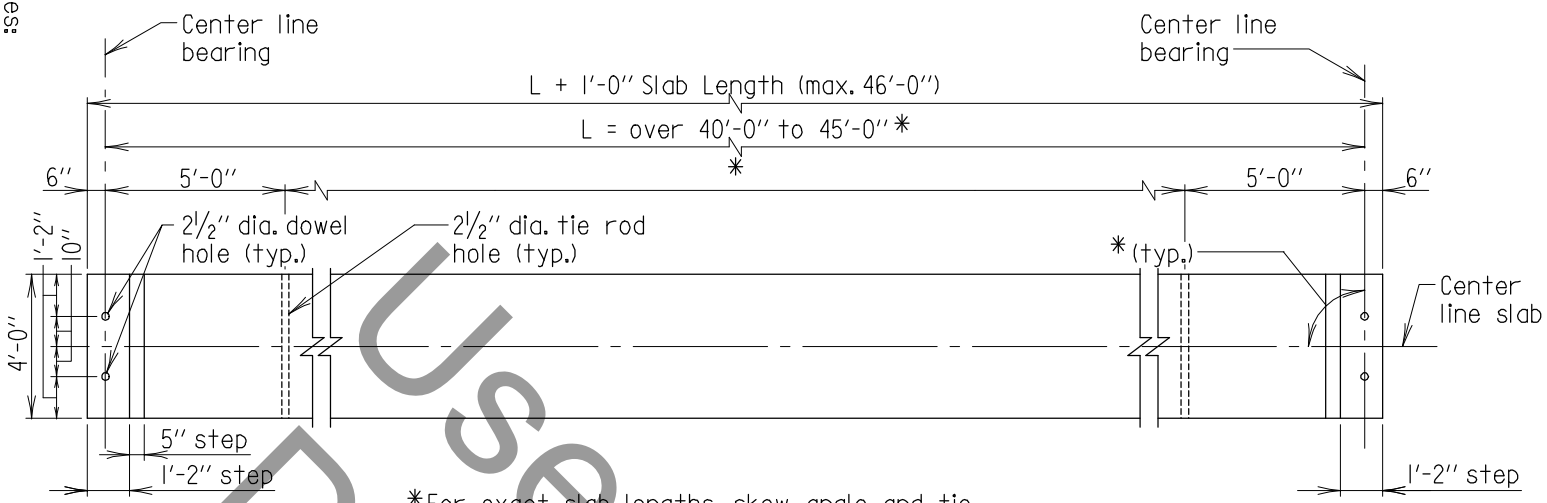

*For exact slab lengths, skew angle and tie rod pattern see contract plans' sheets.

Note:
Stirrup spacing shown is for a 90° crossing. For bridges with other skew angles, see Std. No. SUP-SLAB(4FT)-603 for details of skewed ends.

4'-0" INTERIOR SLAB PLAN
Scale: 3/16" = 1'-0"

Note:
Reinforcing steel at ends of slab not shown for clarity.

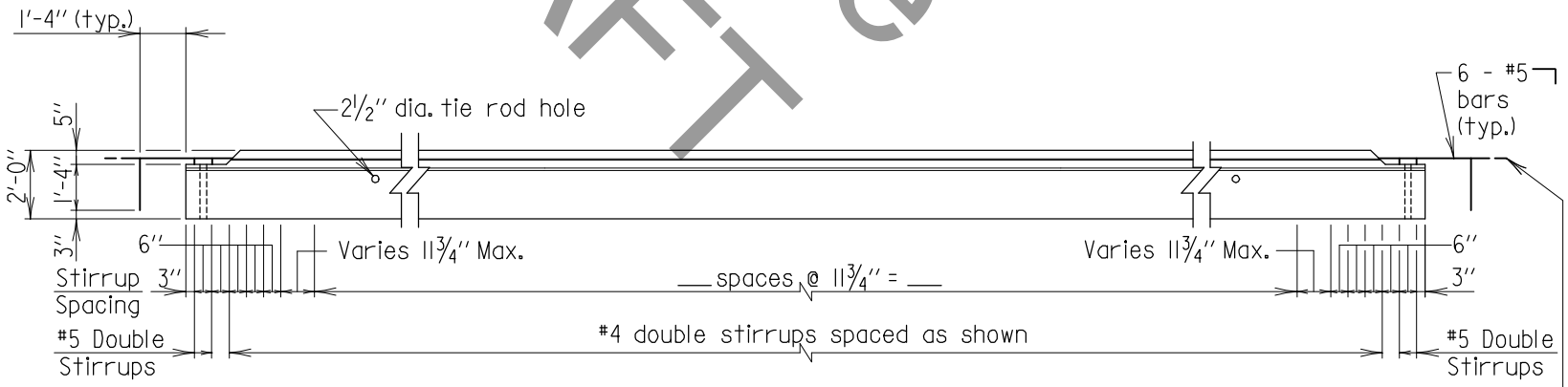

4'-0" INTERIOR SLAB ELEVATION
Scale: 3/16" = 1'-0"

Useable DRAFT

FHWA APPROVAL	
DATE:	

APPROVAL	
DIRECTOR OFFICE OF STRUCTURES	
DATE: 09/01/15	
REVISIONS	
SHA	FHWA

STATE OF MARYLAND
DEPARTMENT OF TRANSPORTATION
STATE HIGHWAY ADMINISTRATION
OFFICE OF STRUCTURES

SIMPLE SPAN GREATER THAN 40'-0" TO 45'-0"
INTERIOR 4'-0" PRECAST CONCRETE SLAB PANEL
PLAN & ELEVATION

NO. SUP-SLAB(4FT)-601 SHEET 1 OF 2

* USEABLE DRAFT *

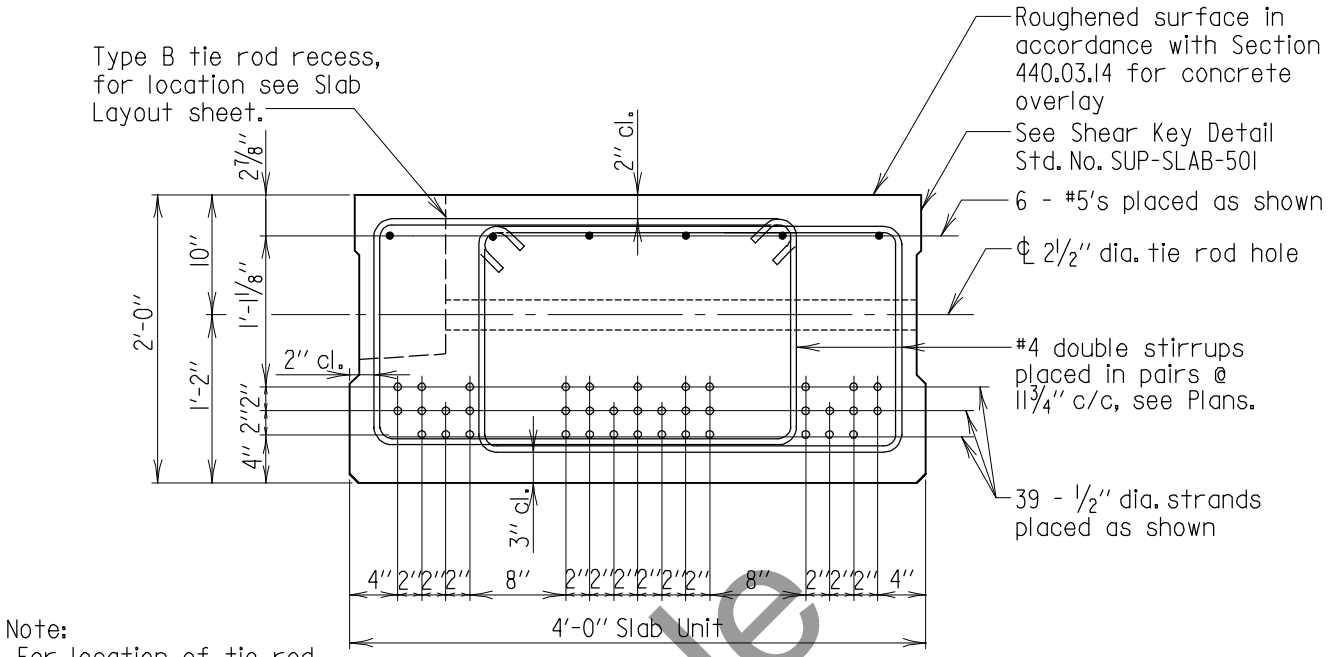

Note:
For location of tie rod holes, see contract plans.

SECTION - SLAB AT MIDSPAN
Scale: ¾" = 1'-0"

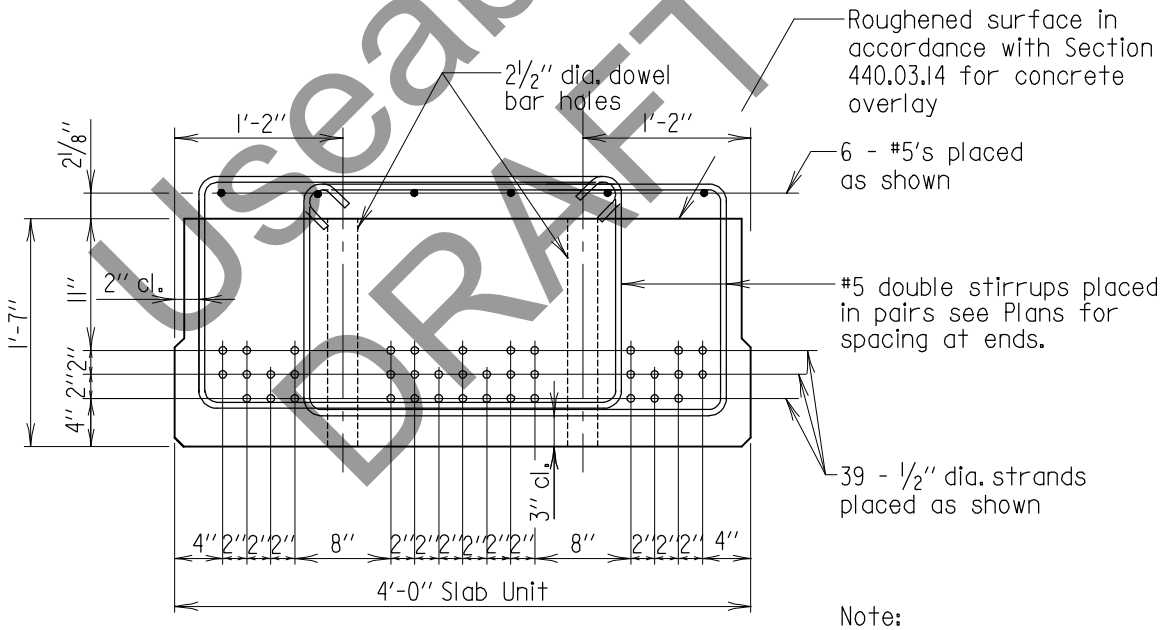

SECTION - SLAB AT ENDS
Scale: ¾" = 1'-0"

Note:
Any misplaced dowel bar holes or tie rod holes will be cause for rejection of the precast slab unit.

Useable DRAFT

* USEABLE DRAFT *

APPROVAL	
_____ DIRECTOR OFFICE OF STRUCTURES DATE: 09/01/15	
REVISIONS	
SHA	FHWA
FHWA APPROVAL	
DATE:	

STATE OF MARYLAND
DEPARTMENT OF TRANSPORTATION
STATE HIGHWAY ADMINISTRATION
OFFICE OF STRUCTURES

SIMPLE SPAN GREATER THAN 40'-0" TO 45'-0"
INTERIOR 4'-0" PRECAST CONCRETE SLAB PANEL SECTIONS

NO. SUP-SLAB(4FT)-601 SHEET 2 OF 2

SUPERSTRUCTURE SLABS

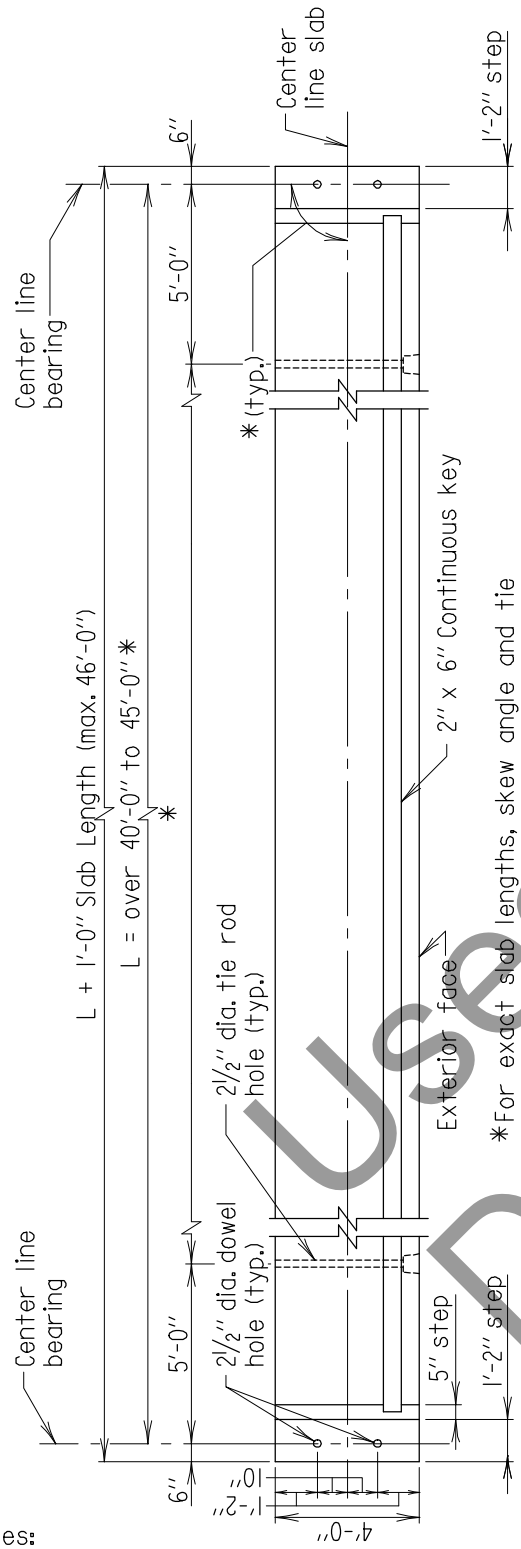

*For exact slab lengths, skew angle and tie rod pattern see contract plans' sheets.

Note:
Reinforcing steel at ends of slab and curb reinforcing not shown for clarity.

4'-0" EXTERIOR SLAB PLAN
Scale: 3/16" = 1'-0"

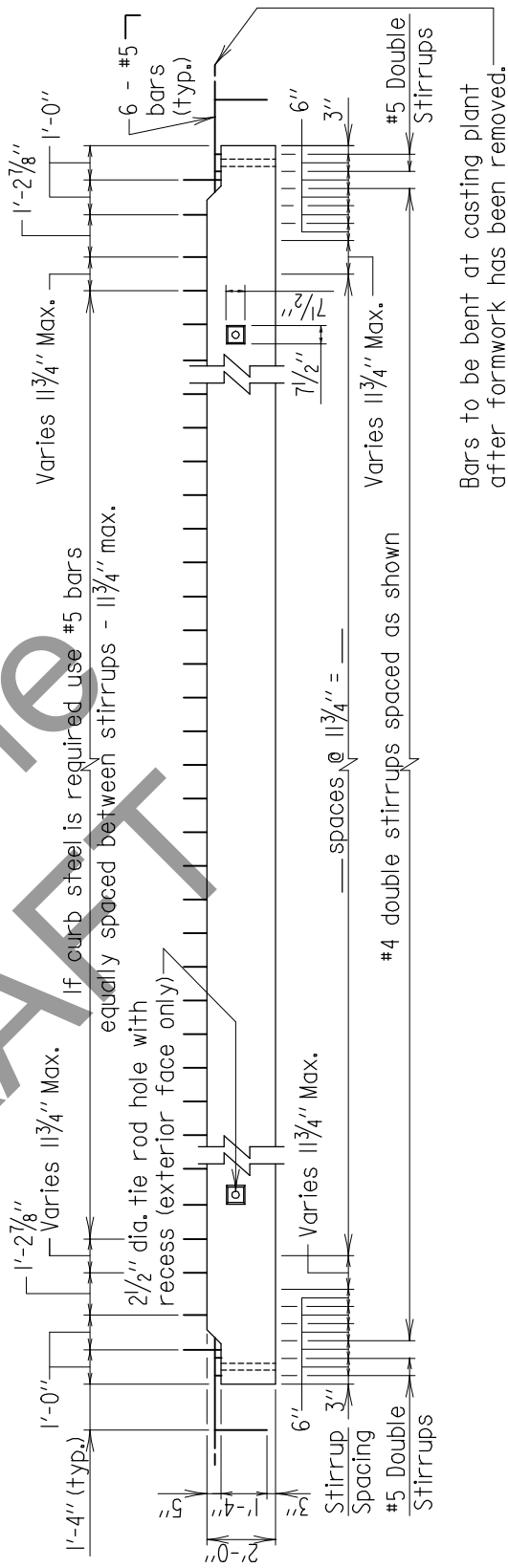

4'-0" EXTERIOR SLAB ELEVATION
Scale: 3/16" = 1'-0"

Note:
Stirrup spacing shown is for a 90° crossing. For bridges with other skew angles, see Std. No. SUP-SLAB(4FT)-603 for details of skewed ends.

Notes:

1. Extreme care shall be used in locating tie rod holes during the casting operation. Contractor shall assemble the slab units for the entire bridge width at the casting plant to ensure that there is no hole misalignment prior to shipping slab units to the site. Any misalignment of the holes will be cause for rejection of the slab unit. Drilling or coring of the slabs to create new or modified cast holes is prohibited.
2. Adjust curb rebar and stirrup spacing as needed to avoid tie rod hole and railing anchor bolts (if applicable).
3. All reinforcing steel to be epoxy coated.

Useable DRAFT

* USEABLE DRAFT *

APPROVAL	
_____ DIRECTOR OFFICE OF STRUCTURES	
DATE: 09/01/15	
REVISIONS	
SHA	FHWA

FHWA APPROVAL
DATE:

STATE OF MARYLAND
DEPARTMENT OF TRANSPORTATION
STATE HIGHWAY ADMINISTRATION
OFFICE OF STRUCTURES

SIMPLE SPAN GREATER THAN 40'-0" TO 45'-0"
EXTERIOR 4'-0" PRECAST CONCRETE SLAB PANEL
PLAN & ELEVATION

NO. SUP-SLAB(4FT)-602 SHEET 1 OF 2

SUPERSTRUCTURE SLABS

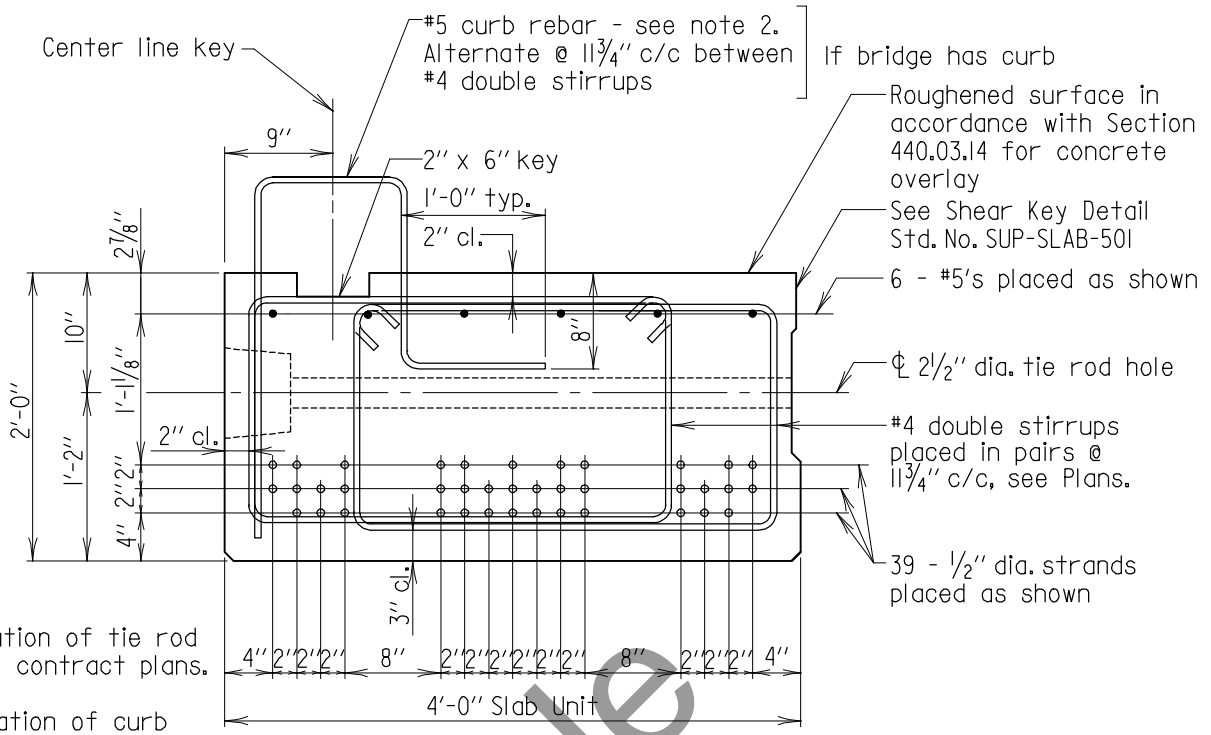

Notes:

1. For location of tie rod holes, see contract plans.

2. For location of curb reinforcement and anchor bolts and plates to be cast in slab for railing, see Std. No. SUP-TB(TR)-301

SECTION - SLAB AT MIDSPAN

Scale: ¾" = 1'-0"

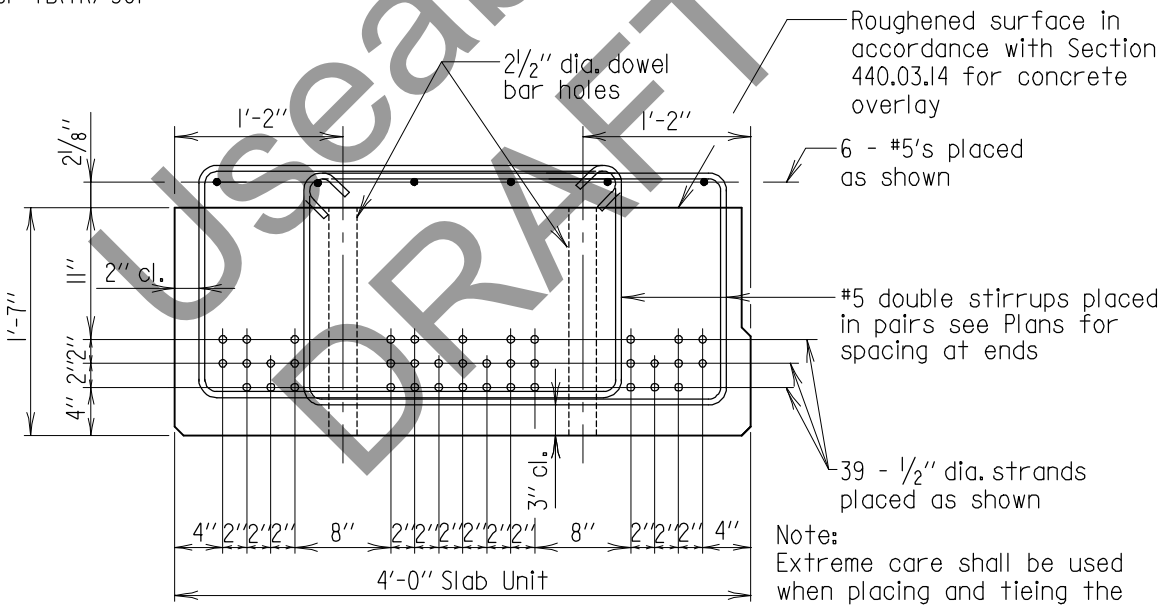

SECTION - SLAB AT ENDS

Scale: ¾" = 1'-0"

Note:
Extreme care shall be used when placing and tieing the curb rebar, railing and anchor bolts assembly to provide for the required clearances. Any misplaced rebar, dowel bar holes, tie rod holes or anchor bolts will be cause for rejection of the precast slab unit.

Useable DRAFT

* USEABLE DRAFT *

APPROVAL	
_____ DIRECTOR OFFICE OF STRUCTURES DATE: 09/01/15	
REVISIONS	
SHA	FHWA

FHWA APPROVAL
DATE:

STATE OF MARYLAND
DEPARTMENT OF TRANSPORTATION
STATE HIGHWAY ADMINISTRATION
OFFICE OF STRUCTURES

SIMPLE SPAN GREATER THAN 40'-0" TO 45'-0"
EXTERIOR 4'-0" PRECAST CONCRETE SLAB PANEL SECTIONS

NO. SUP-SLAB(4FT)-602 SHEET 2 OF 2

SUPERSTRUCTURE SLABS

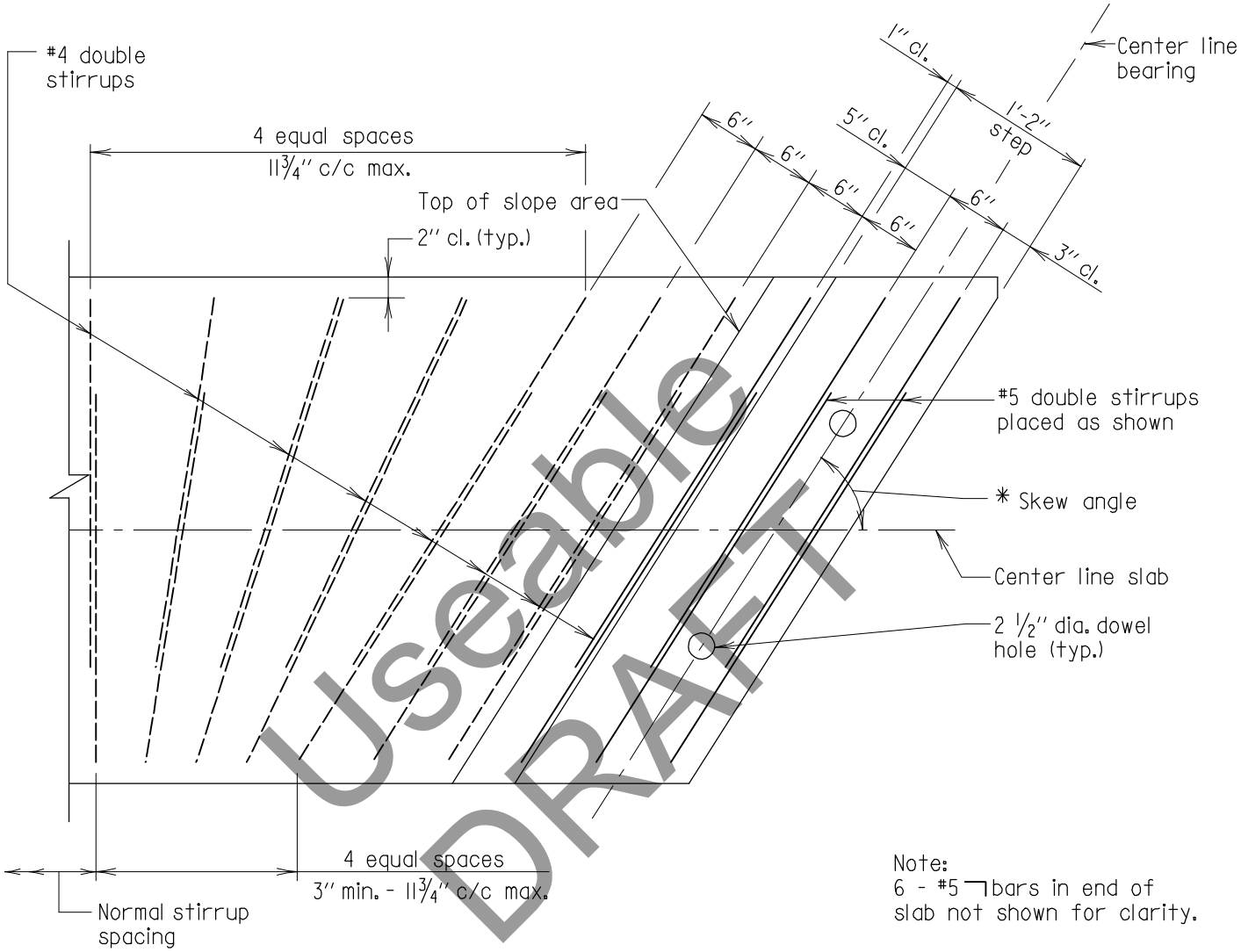

Useable DRAFT

Note:
6 - #5 ⌉ bars in end of slab not shown for clarity.

*For exact skew angle, see contract plan sheets.

PLAN
Scale: 3/4'' = 1'-0''

Note to Fabricator:
End stirrup spacing must be laid out to determine spacing.

Note to Designer:
Layout shown works up to a skew angle of 55°. For angles less than 55° designer must layout skewed end detail on plans.

* USEABLE DRAFT *

Note:
All reinforcing steel to be epoxy coated.

APPROVAL	
_____ DIRECTOR OFFICE OF STRUCTURES DATE: 09/01/15	
REVISIONS	
SHA	FHWA
FHWA APPROVAL	
DATE:	

STATE OF MARYLAND
DEPARTMENT OF TRANSPORTATION
STATE HIGHWAY ADMINISTRATION
OFFICE OF STRUCTURES

SIMPLE SPAN GREATER THAN 40'-0'' TO 45'-0''
INTERIOR 4'-0'' PRECAST CONCRETE SLAB PANEL
SKEWED END DETAIL

NO. SUP-SLAB(4FT)-603 SHEET 1 OF 2

SUPERSTRUCTURE SLABS

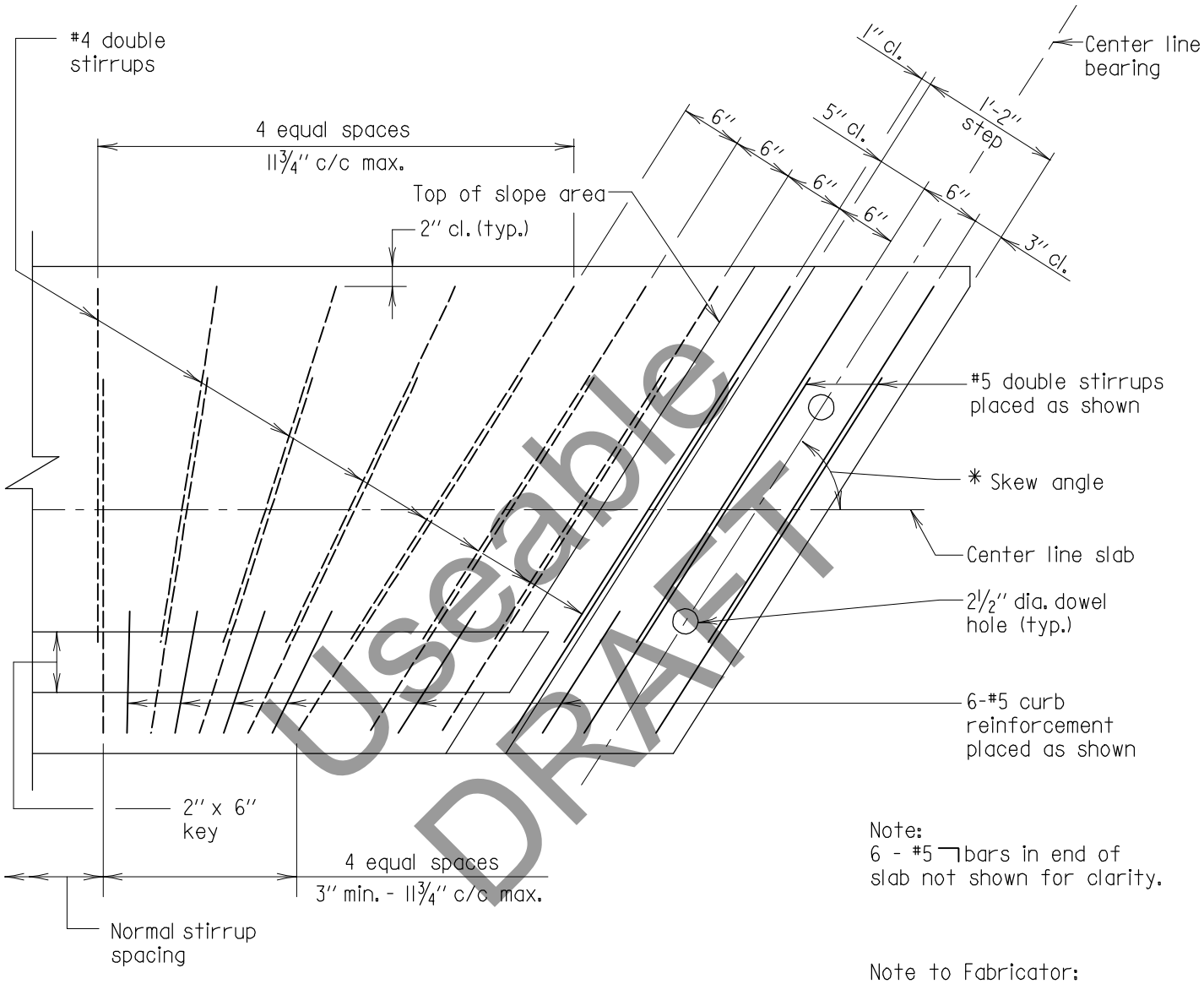

Useable DRAFT

Note:
6 - #5 ⌉ bars in end of slab not shown for clarity.

*For exact skew angle, see contract plan sheets.

PLAN
Scale: ¾'' = 1'-0''

Note to Fabricator:
End stirrup spacing must be laid out to determine spacing.

Note to Designer:
Layout shown works up to a skew angle of 55°. For angles less than 55° designer must layout skewed end detail on plans.

* USEABLE DRAFT *

Note:
All reinforcing steel to be epoxy coated.

APPROVAL	
_____ DIRECTOR OFFICE OF STRUCTURES DATE: 09/01/15	
REVISIONS	
SHA	FHWA
FHWA APPROVAL	
DATE:	

STATE OF MARYLAND
DEPARTMENT OF TRANSPORTATION
STATE HIGHWAY ADMINISTRATION
OFFICE OF STRUCTURES

SIMPLE SPAN GREATER THAN 40'-0'' TO 45'-0''
EXTERIOR 4'-0'' PRECAST CONCRETE SLAB PANEL
SKEWED END DETAIL

NO. SUP-SLAB(4FT)-603 SHEET 2 OF 2

SUPERSTRUCTURE SLABS

Notes:

1. Extreme care shall be used in locating tie rod holes during the casting operation. Contractor shall assemble the slab units for the entire bridge width at the casting plant to ensure that there is no hole misalignment prior to shipping slab units to the site. Any misalignment of the holes will be cause for rejection of the slab unit. Drilling or coring of the slabs to create new or modified cast holes is prohibited.
2. Adjust curb rebar and stirrup spacing as needed to avoid tie rod hole and railing anchor bolts (if applicable).
3. All reinforcing steel to be epoxy coated.

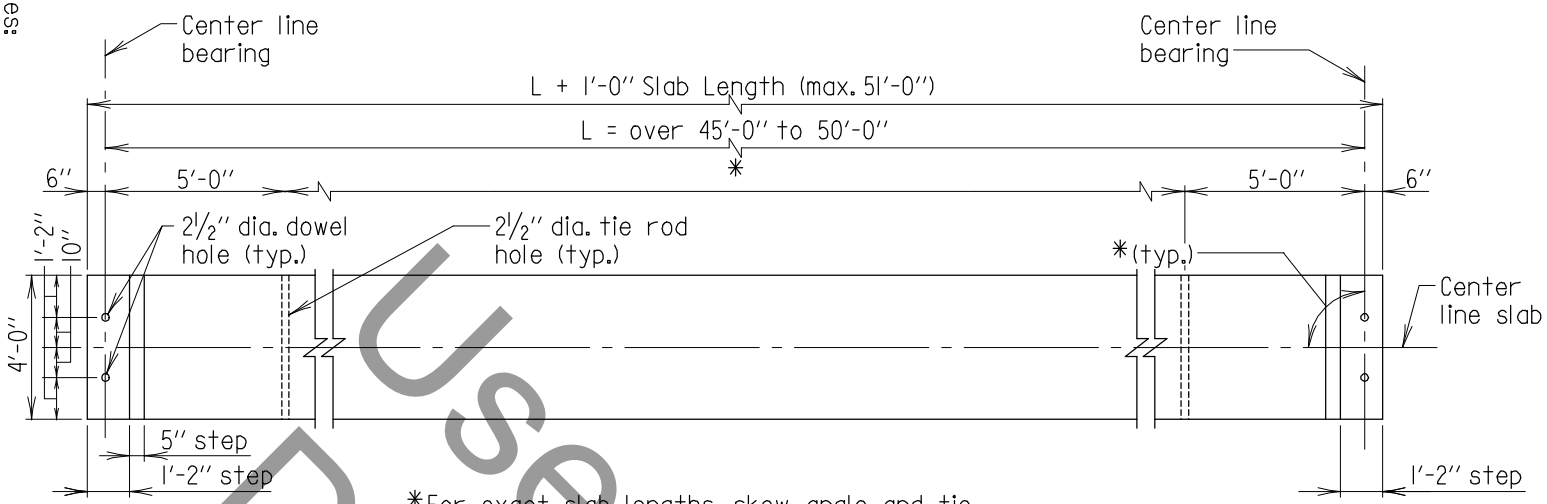

*For exact slab lengths, skew angle and tie rod pattern see contract plans' sheets.

Note:
Stirrup spacing shown is for a 90° crossing. For bridges with other skew angles, see Std. No. SUP-SLAB(4FT)-703 for details of skewed ends.

4'-0" INTERIOR SLAB PLAN
Scale: 3/16" = 1'-0"

Note:
Reinforcing steel at ends of slab not shown for clarity.

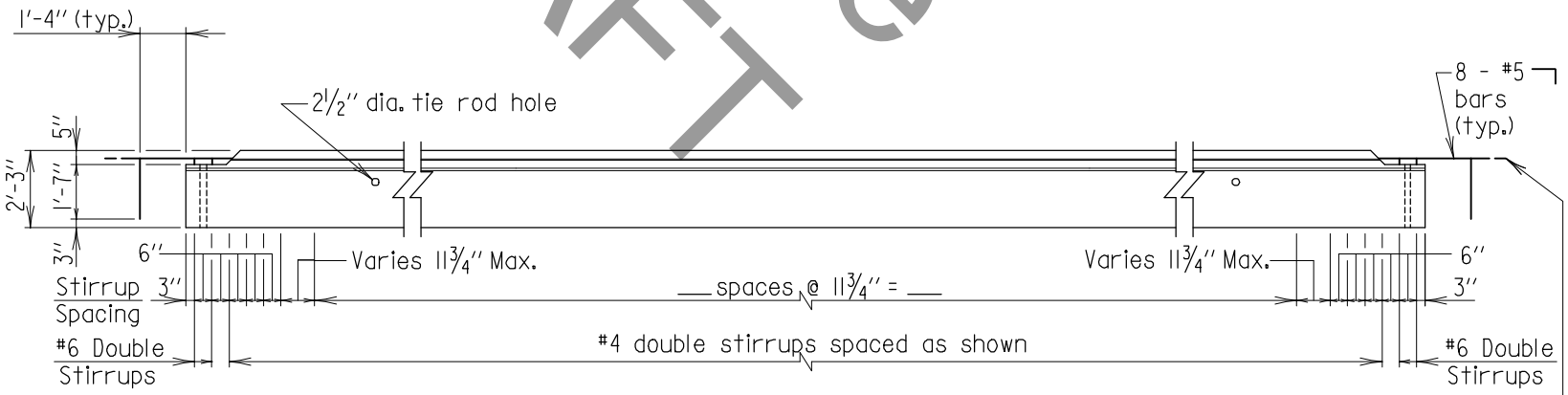

4'-0" INTERIOR SLAB ELEVATION
Scale: 3/16" = 1'-0"

Useable DRAFT

FHWA APPROVAL
DATE:

APPROVAL
DIRECTOR OFFICE OF STRUCTURES
DATE: 09/01/15

REVISIONS
SHA FHWA

STATE OF MARYLAND
DEPARTMENT OF TRANSPORTATION
STATE HIGHWAY ADMINISTRATION
OFFICE OF STRUCTURES

SIMPLE SPAN GREATER THAN 45'-0" TO 50'-0"
INTERIOR 4'-0" PRECAST CONCRETE SLAB PANEL
PLAN & ELEVATION

NO. SUP-SLAB(4FT)-701 SHEET 1 OF 2

* USEABLE DRAFT *

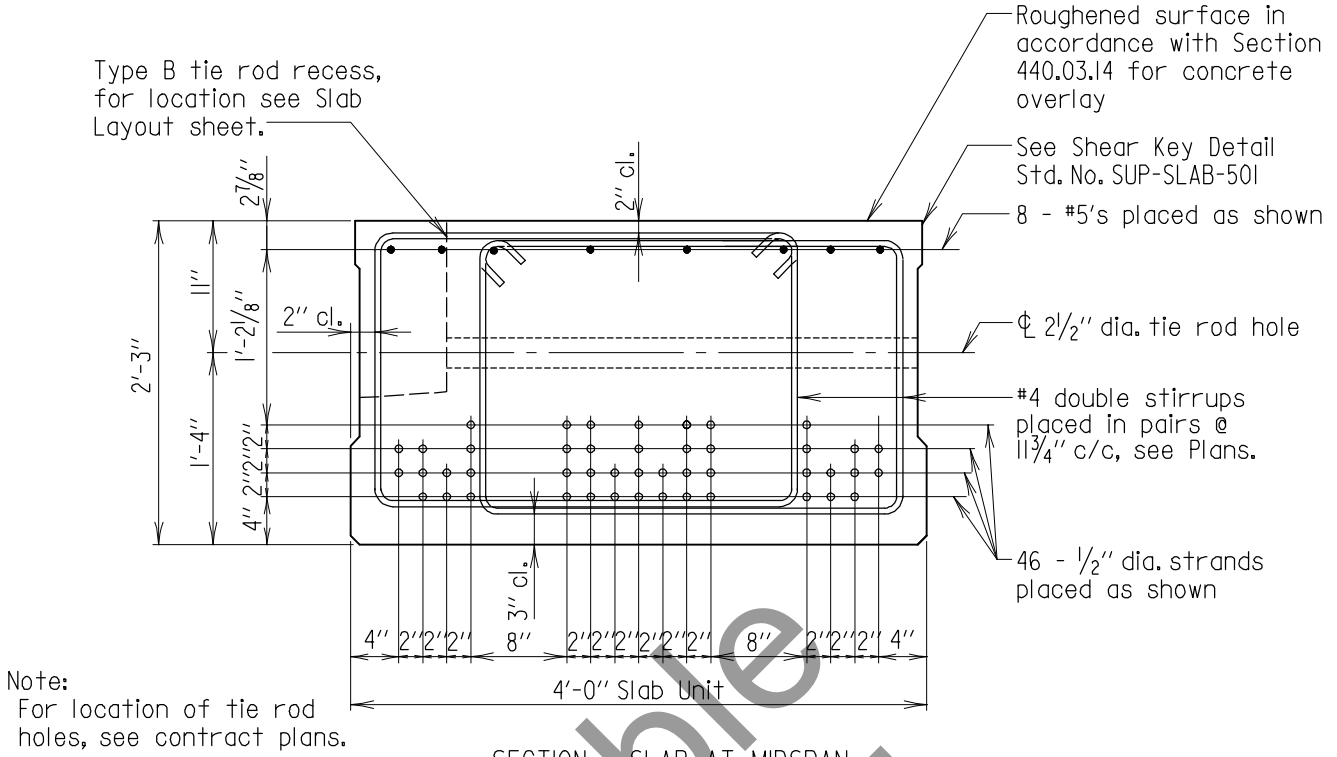

Note:
For location of tie rod holes, see contract plans.

SECTION - SLAB AT MIDSPAN
Scale: ¾" = 1'-0"

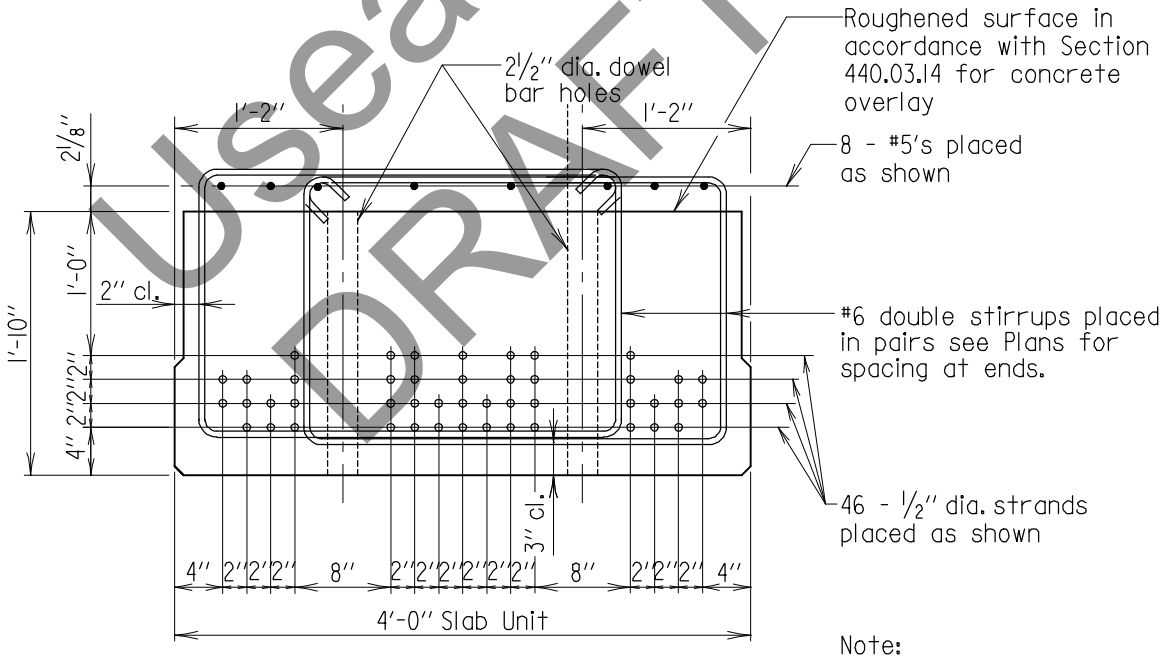

SECTION - SLAB AT ENDS
Scale: ¾" = 1'-0"

Note:
Any misplaced dowel bar holes or tie rod holes will be cause for rejection of the precast slab unit.

Useable DRAFT

* USEABLE DRAFT *

APPROVAL	
_____ DIRECTOR OFFICE OF STRUCTURES DATE: 09/01/15	
REVISIONS	
SHA	FHWA
FHWA APPROVAL	
DATE:	

STATE OF MARYLAND
DEPARTMENT OF TRANSPORTATION
STATE HIGHWAY ADMINISTRATION
OFFICE OF STRUCTURES

SIMPLE SPAN GREATER THAN 45'-0" TO 50'-0"
INTERIOR 4'-0" PRECAST CONCRETE SLAB PANEL
SECTIONS

NO. SUP-SLAB(4FT)-701 SHEET 2 OF 2

SUPERSTRUCTURE SLABS

* For exact slab lengths, skew angle and tie rod pattern see contract plans' sheets.

4'-0" EXTERIOR SLAB PLAN
Scale: 3/16" = 1'-0"

Note:
Reinforcing steel at ends of slab and curb reinforcing not shown for clarity.

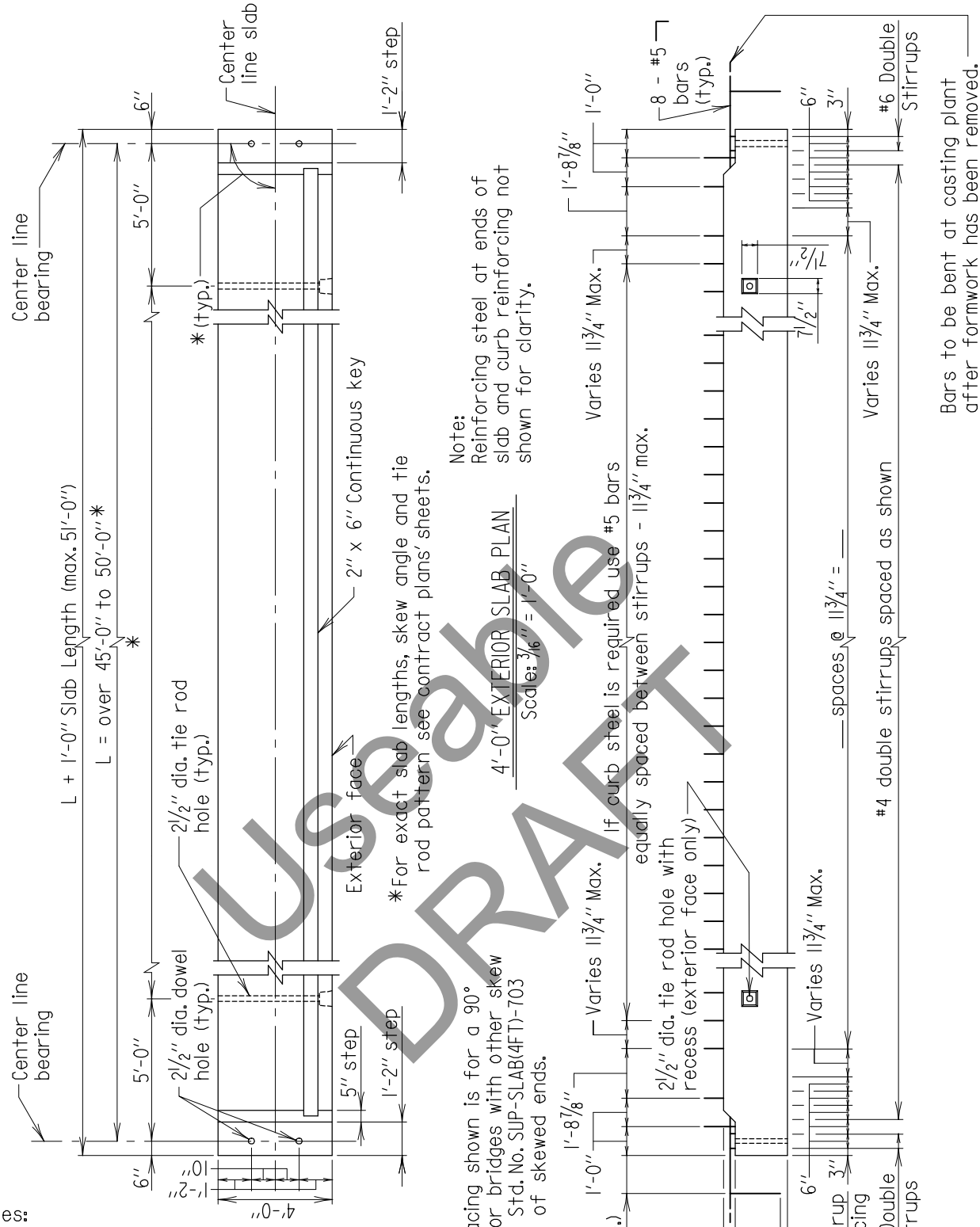

4'-0" EXTERIOR SLAB ELEVATION
Scale: 3/16" = 1'-0"

Note:
Stirrup spacing shown is for a 90° crossing. For bridges with other skew angles, see Std. No. SUP-SLAB(4FT)-703 for details of skewed ends.

Notes:

1. Extreme care shall be used in locating tie rod holes during the casting operation. Contractor shall assemble the slab units for the entire bridge width at the casting plant to ensure that there is no hole misalignment prior to shipping slab units to the site. Any misalignment of the holes will be cause for rejection of the slab unit. Drilling or coring of the slabs to create new or modified cast holes is prohibited.
2. Adjust curb rebar and stirrup spacing as needed to avoid tie rod hole and railing anchor bolts (if applicable).
3. All reinforcing steel to be epoxy coated.

Useable DRAFT

* USEABLE DRAFT *

APPROVAL	
_____ DIRECTOR OFFICE OF STRUCTURES	
DATE: 09/01/15	
REVISIONS	
SHA	FHWA

FHWA APPROVAL
DATE:

STATE OF MARYLAND
DEPARTMENT OF TRANSPORTATION
STATE HIGHWAY ADMINISTRATION
OFFICE OF STRUCTURES

SIMPLE SPAN GREATER THAN 45'-0" TO 50'-0"
EXTERIOR 4'-0" PRECAST CONCRETE SLAB PANEL
PLAN & ELEVATION

NO. SUP-SLAB(4FT)-702 SHEET 1 OF 2

SUPERSTRUCTURE SLABS

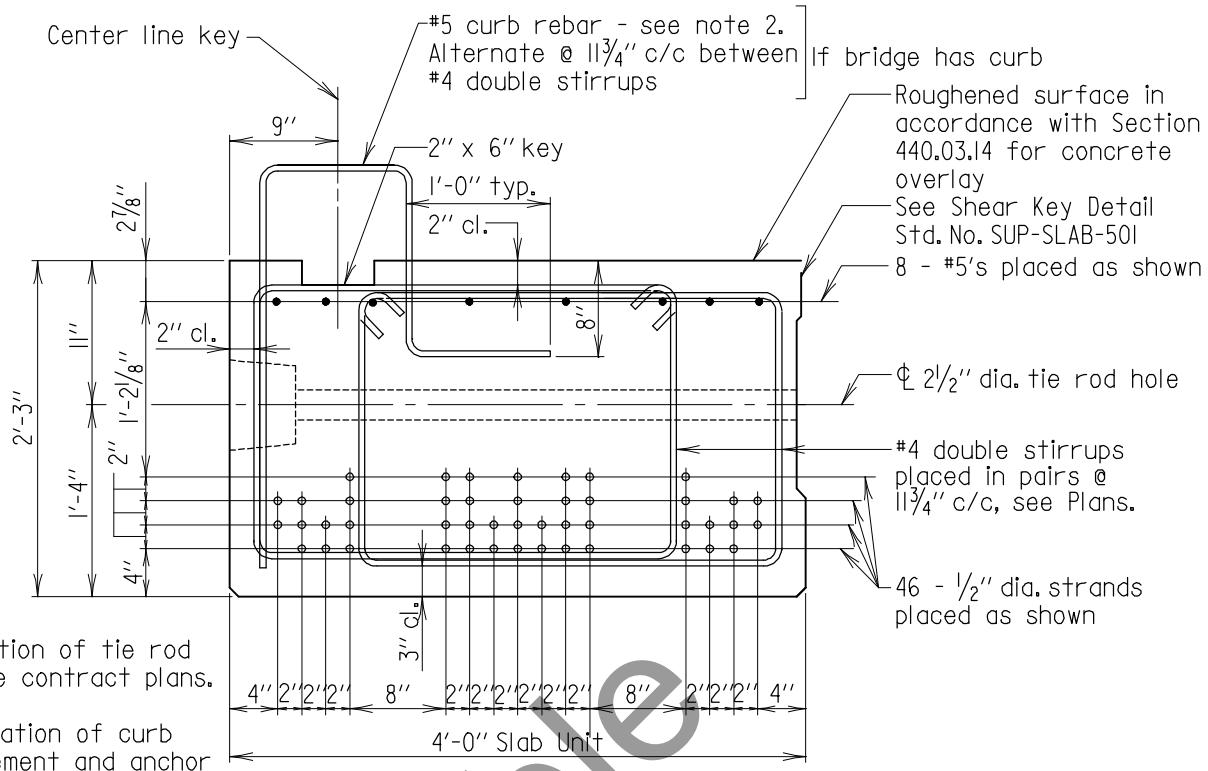

Notes:

1. For location of tie rod holes, see contract plans.

2. For location of curb reinforcement and anchor bolts and plates to be cast in slab for railing, see Std. No. SUP-TB(TR)-301

SECTION - SLAB AT MIDSPAN

Scale: ¾" = 1'-0"

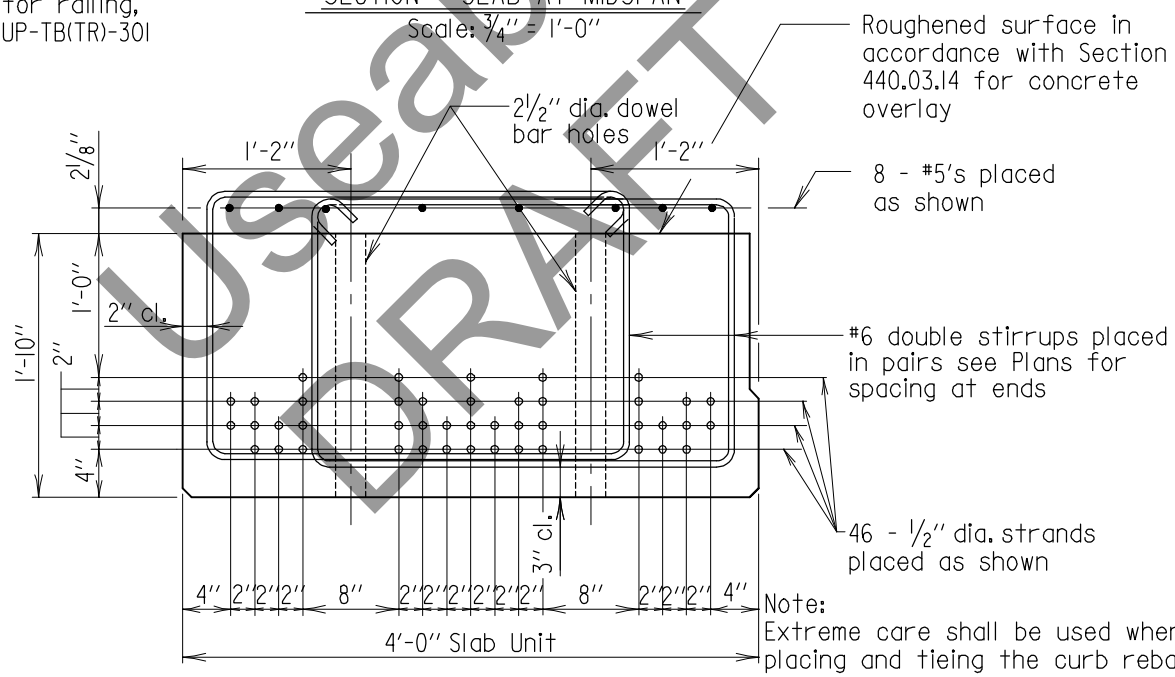

SECTION - SLAB AT ENDS

Scale: ¾" = 1'-0"

Note:
Extreme care shall be used when placing and tieing the curb rebar, railing and anchor bolts assembly to provide for the required clearances. Any misplaced rebar, dowel bar holes, tie rod holes or anchor bolts will be cause for rejection of the precast slab unit.

Useable DRAFT

* USEABLE DRAFT *

APPROVAL	
_____ DIRECTOR OFFICE OF STRUCTURES DATE: 09/01/15	
REVISIONS	
SHA	FHWA

FHWA APPROVAL
DATE:

STATE OF MARYLAND
DEPARTMENT OF TRANSPORTATION
STATE HIGHWAY ADMINISTRATION
OFFICE OF STRUCTURES

SIMPLE SPAN GREATER THAN 45'-0" TO 50'-0"
EXTERIOR 4'-0" PRECAST CONCRETE SLAB PANEL SECTIONS

NO. SUP-SLAB(4FT)-702 SHEET 2 OF 2

SUPERSTRUCTURE SLABS

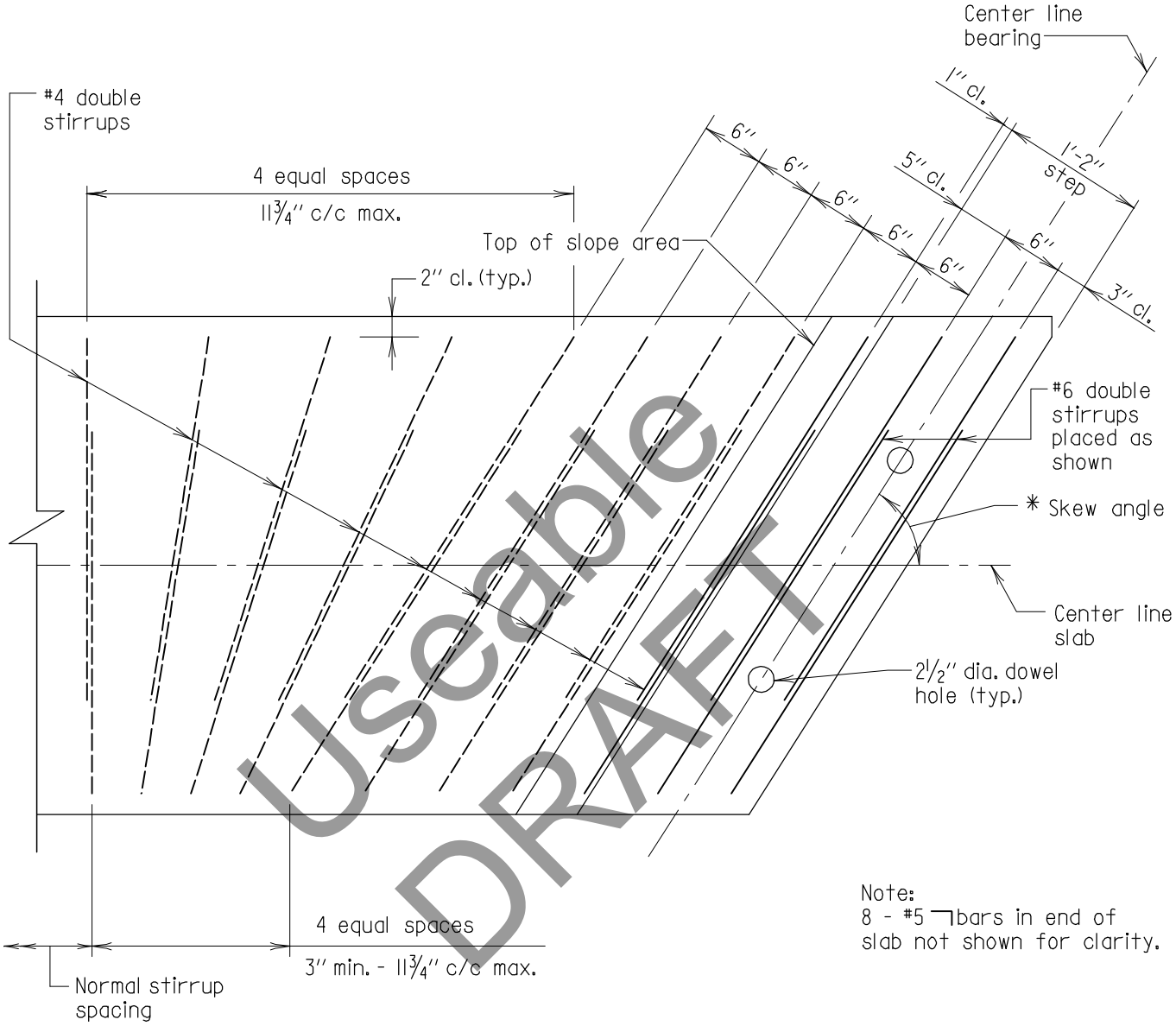

Useable DRAFT

Note:
8 - #5 ⌉bars in end of slab not shown for clarity.

Note to Fabricator:
End stirrup spacing must be laid out to determine spacing.

*For exact skew angle, see contract plan sheets.

PLAN
Scale: ¾'' = 1'-0''

Note to Designer:
Layout shown works up to a skew angle of 55°. For angles less than 55° designer must layout skewed end detail on plans.

* USEABLE DRAFT *

Note:
All reinforcing steel to be epoxy coated.

APPROVAL	
_____ DIRECTOR OFFICE OF STRUCTURES DATE: 09/01/15	
REVISIONS	
SHA	FHWA
FHWA APPROVAL	
DATE:	

STATE OF MARYLAND
DEPARTMENT OF TRANSPORTATION
STATE HIGHWAY ADMINISTRATION
OFFICE OF STRUCTURES

SIMPLE SPAN GREATER THAN 45'-0'' TO 50'-0''
INTERIOR 4'-0'' PRECAST CONCRETE SLAB PANEL
SKEWED END DETAIL

NO. SUP-SLAB(4FT)-703 SHEET 1 OF 2

SUPERSTRUCTURE SLABS

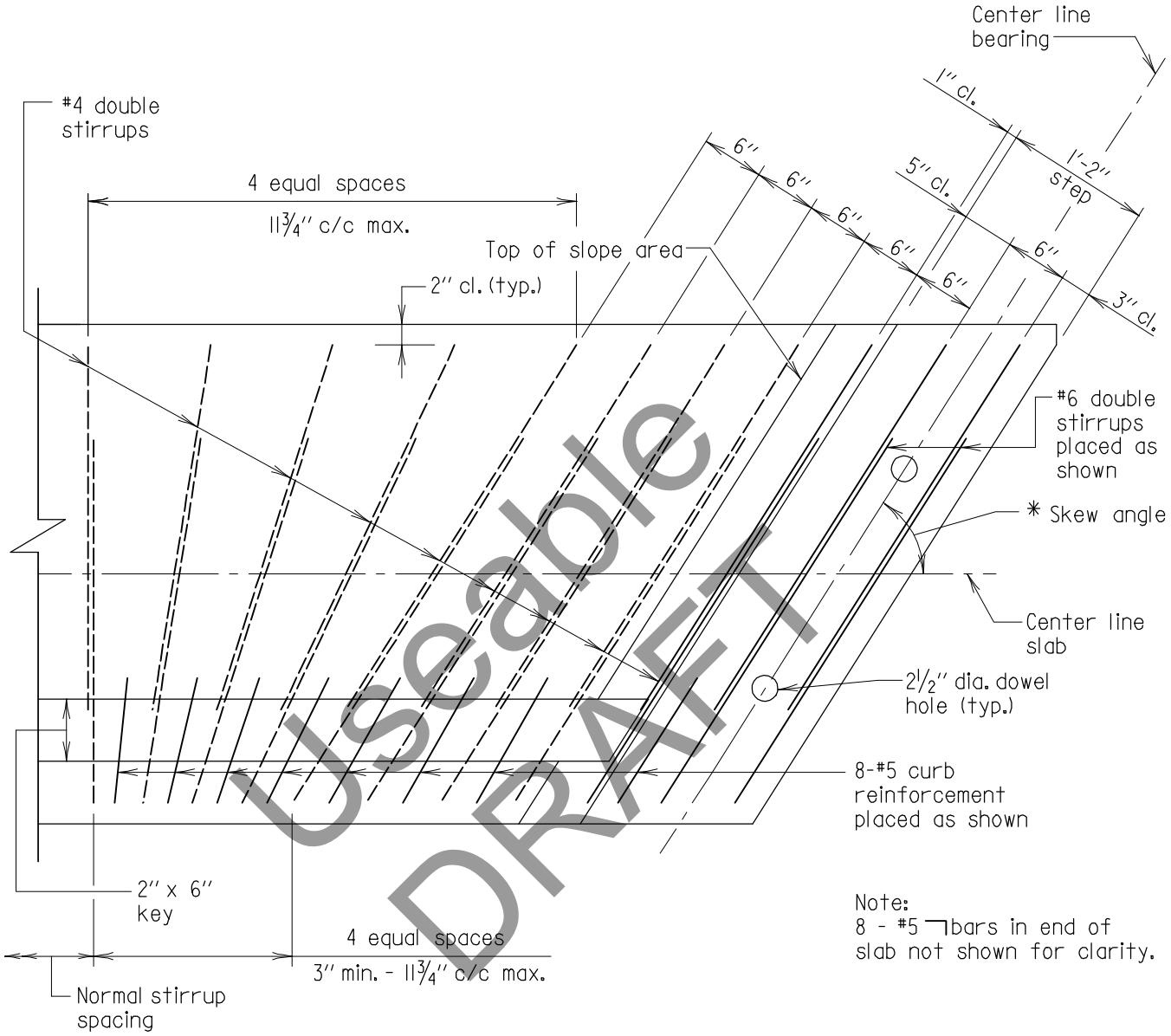

Useable DRAFT

Note:
8 - #5 ⌐bars in end of slab not shown for clarity.

Note to Fabricator:
End stirrup spacing must be laid out to determine spacing.

Note to Designer:
Layout shown works up to a skew angle of 55°. For angles less than 55° designer must layout skewed end detail on plans.

*For exact skew angle, see contract plan sheets.

PLAN
Scale: ¾'' = 1'-0''

* USEABLE DRAFT *

Note:
All reinforcing steel to be epoxy coated.

APPROVAL	
_____ DIRECTOR OFFICE OF STRUCTURES DATE: 09/01/15	
REVISIONS	
SHA	FHWA
FHWA APPROVAL	
DATE:	

STATE OF MARYLAND
DEPARTMENT OF TRANSPORTATION
STATE HIGHWAY ADMINISTRATION
OFFICE OF STRUCTURES

SIMPLE SPAN GREATER THAN 45'-0'' TO 50'-0''
EXTERIOR 4'-0'' PRECAST CONCRETE SLAB PANEL
SKEWED END DETAIL

NO. SUP-SLAB(4FT)-703 SHEET 2 OF 2

SUPERSTRUCTURE SLABS

Notes:

1. Extreme care shall be used in locating tie rod holes during the casting operation. Contractor shall assemble the slab units for the entire bridge width at the casting plant to ensure that there is no hole misalignment prior to shipping slab units to the site. Any misalignment of the holes will be cause for rejection of the slab unit. Drilling or coring of the slabs to create new or modified cast holes is prohibited.
2. Adjust curb rebar and stirrup spacing as needed to avoid tie rod hole and railing anchor bolts (if applicable).
3. All reinforcing steel to be epoxy coated.

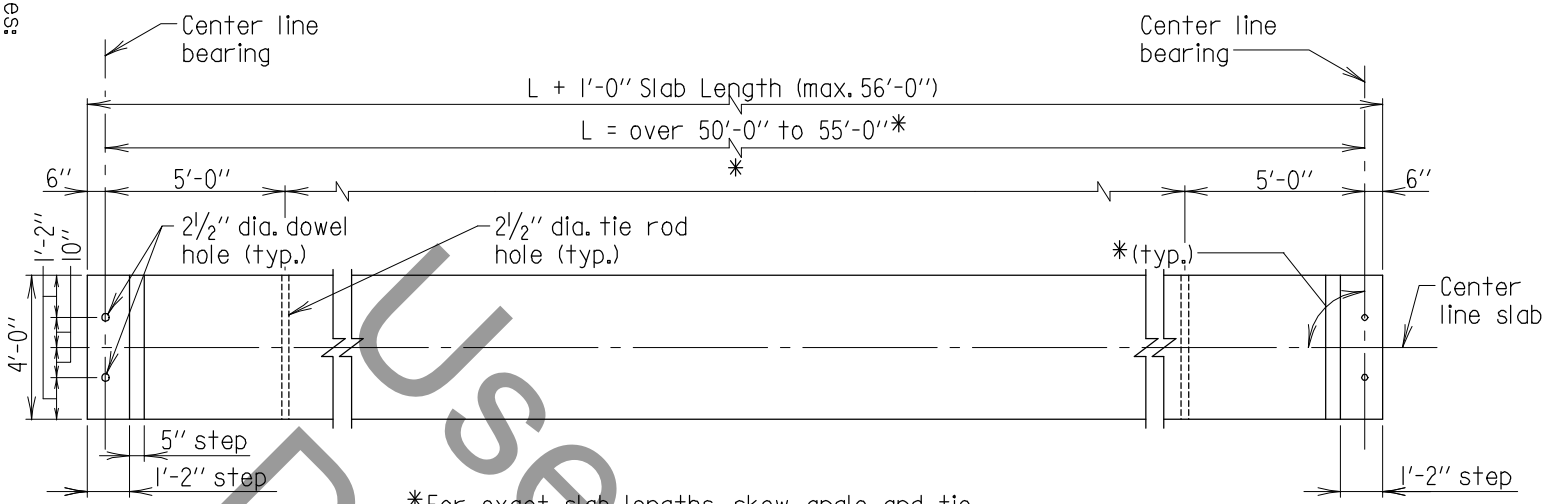

*For exact slab lengths, skew angle and tie rod pattern see contract plans' sheets.

Note:
Stirrup spacing shown is for a 90° crossing. For bridges with other skew angles, see Std. No. SUP-SLAB(4FT)-803 for details of skewed ends.

4'-0" INTERIOR SLAB PLAN
Scale: 3/16" = 1'-0"

Note:
Reinforcing steel at ends of slab not shown for clarity.

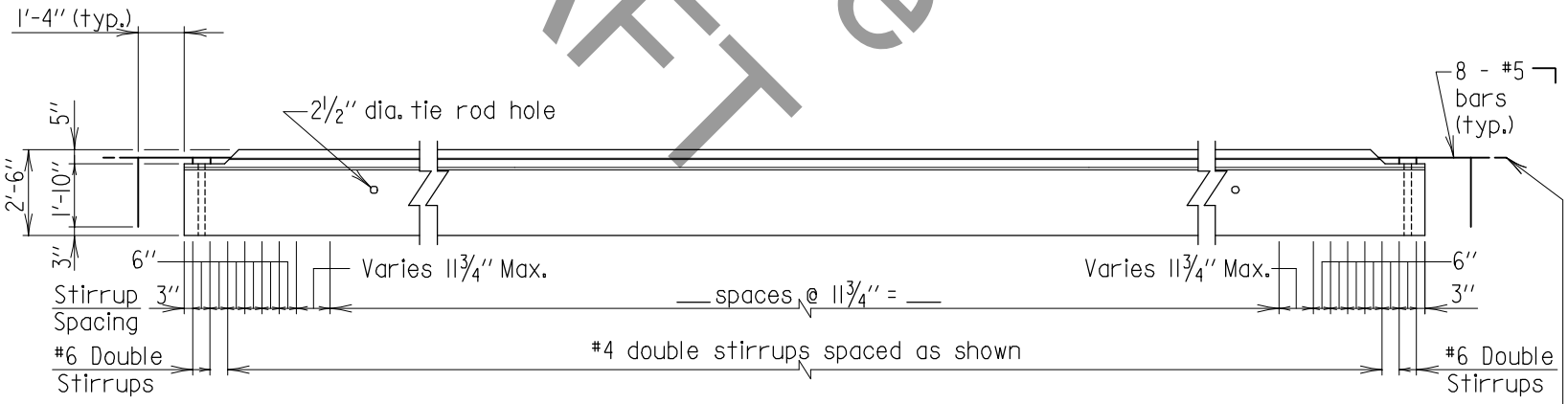

4'-0" INTERIOR SLAB ELEVATION
Scale: 3/16" = 1'-0"

Useable DRAFT

FHWA APPROVAL
DATE:

APPROVAL
DIRECTOR OFFICE OF BRIDGE DEVEL.
DATE: 09/01/15

REVISIONS
SHA FHWA

STATE OF MARYLAND
DEPARTMENT OF TRANSPORTATION
STATE HIGHWAY ADMINISTRATION
OFFICE OF STRUCTURES

SIMPLE SPAN GREATER THAN 50'-0" TO 55'-0"
INTERIOR 4'-0" PRECAST CONCRETE SLAB PANEL
PLAN & ELEVATION

NO. SUP-SLAB(4FT)-801 SHEET 1 OF 2

* USEABLE DRAFT *

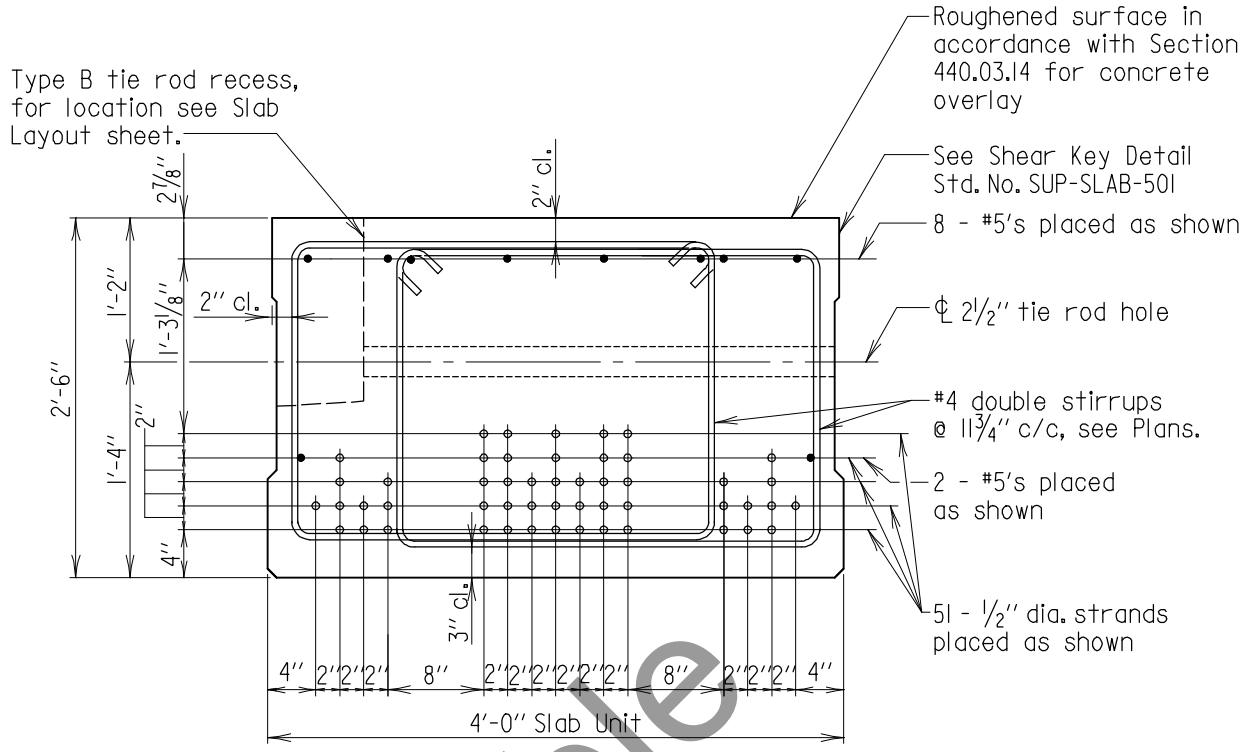

Note:
For location of tie rod holes, see contract plans.

SECTION - SLAB AT MIDSPAN
Scale: ¾" = 1'-0"

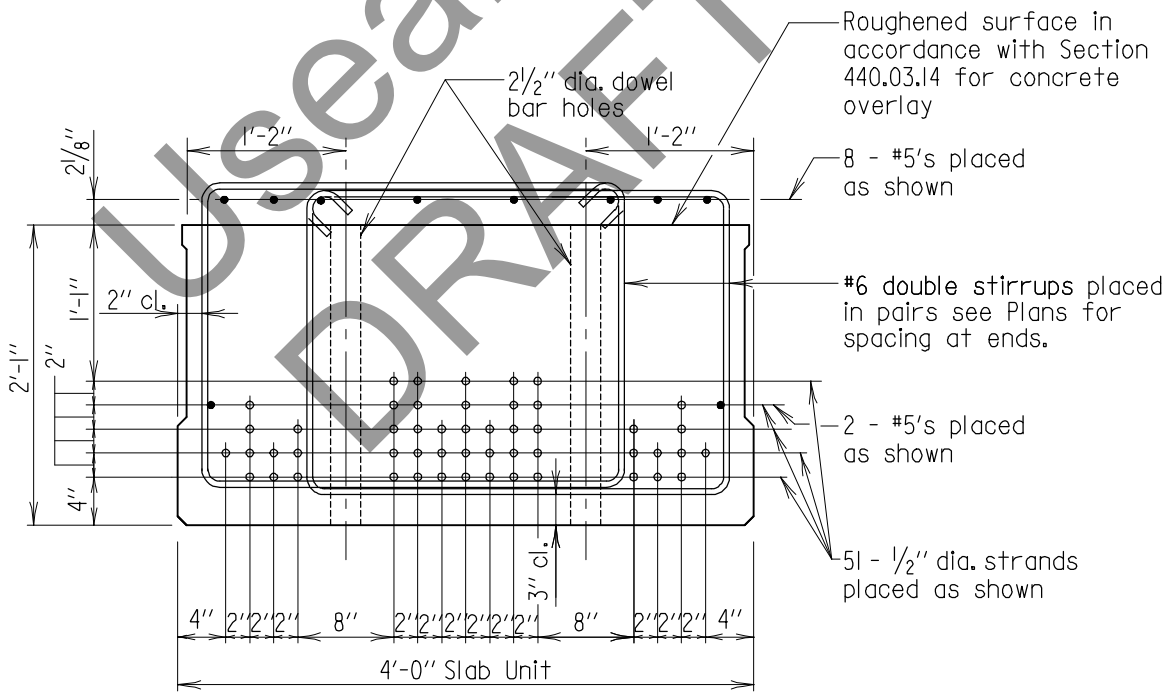

Note:
Any misplaced dowel bar holes or tie rod holes will be cause for rejection of the precast slab unit.

SECTION - SLAB AT ENDS
Scale: ¾" = 1'-0"

Useable DRAFT

* USEABLE DRAFT *

APPROVAL	
_____ DIRECTOR OFFICE OF STRUCTURES DATE: 09/01/15	
REVISIONS	
SHA	FHWA

FHWA APPROVAL
DATE:

STATE OF MARYLAND
DEPARTMENT OF TRANSPORTATION
STATE HIGHWAY ADMINISTRATION
OFFICE OF STRUCTURES

SIMPLE SPAN GREATER THAN 50'-0" TO 55'-0"
INTERIOR 4'-0" PRECAST CONCRETE SLAB PANEL SECTIONS

NO. SUP-SLAB(4FT)-801 SHEET 2 OF 2

SUPERSTRUCTURE SLABS

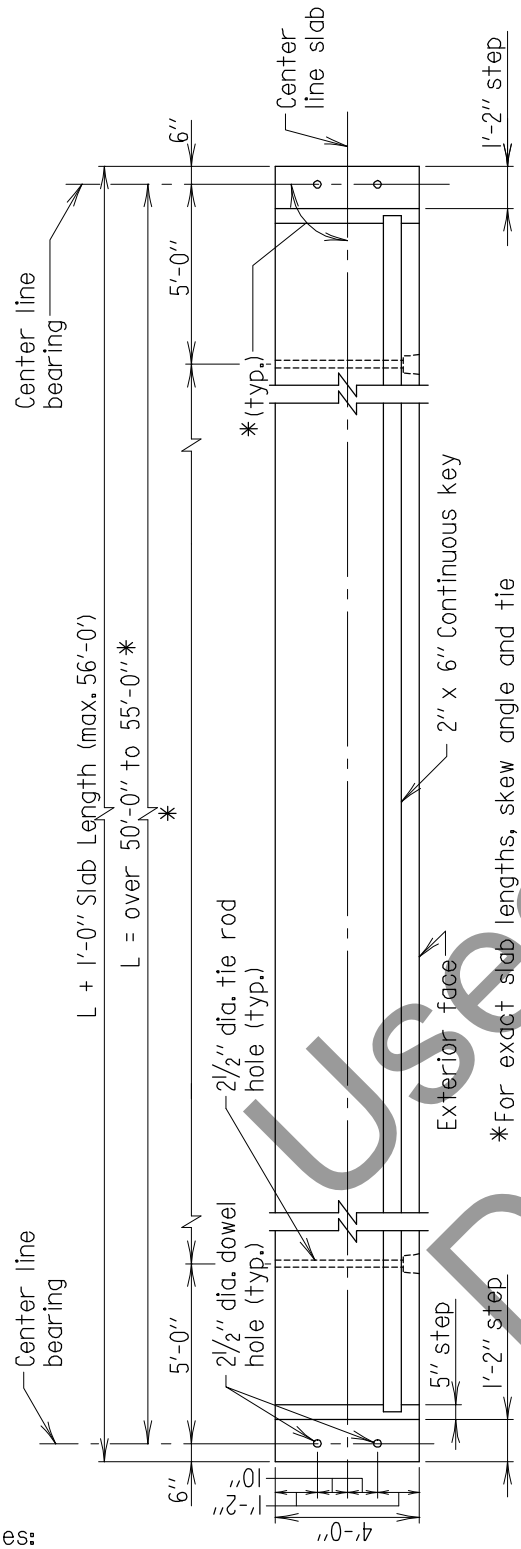

*For exact slab lengths, skew angle and tie rod pattern see contract plans' sheets.

Note:
Reinforcing steel at ends of slab and curb reinforcing not shown for clarity.

4'-0'' EXTERIOR SLAB PLAN
Scale: 3/16'' = 1'-0''

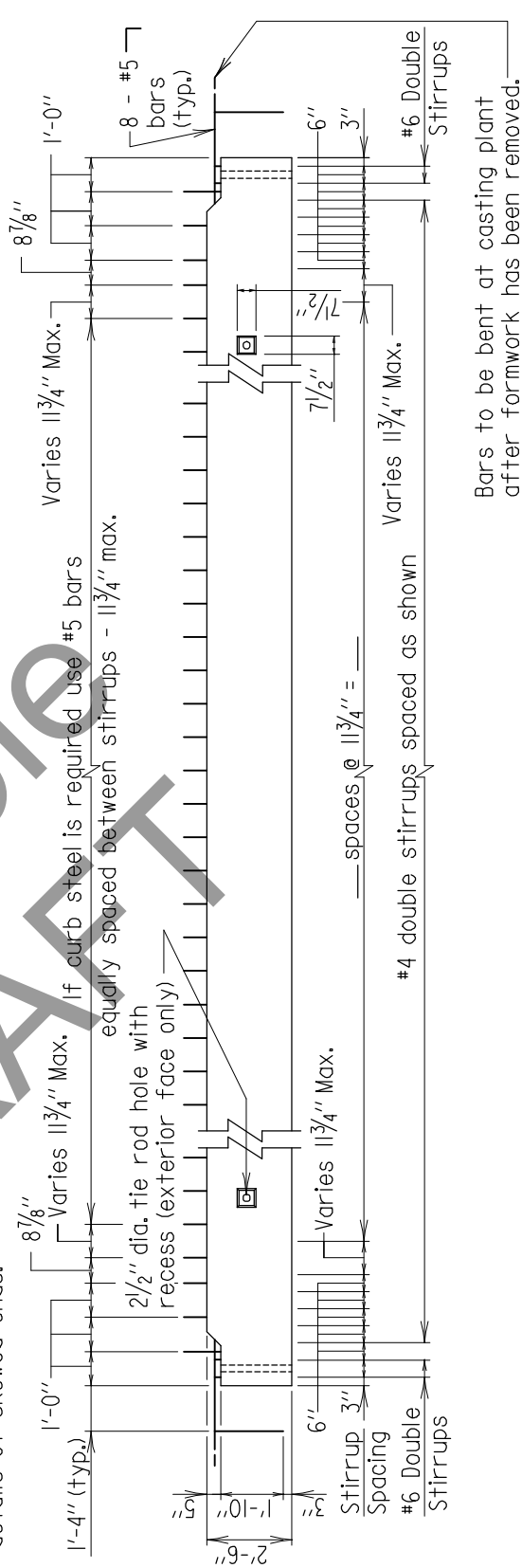

4'-0'' EXTERIOR SLAB ELEVATION
Scale: 3/16'' = 1'-0''

Note:
Stirrup spacing shown is for a 90° crossing. For bridges with other skew angles, see Std. No. SUP-SLAB(4FT)-403 for details of skewed ends.

Notes:

1. Extreme care shall be used in locating tie rod holes during the casting operation. Contractor shall assemble the slab units for the entire bridge width at the casting plant to ensure that there is no hole misalignment prior to shipping slab units to the site. Any misalignment of the holes will be cause for rejection of the slab unit. Drilling or coring of the slabs to create new or modified cast holes is prohibited.
2. Adjust curb rebar and stirrup spacing as needed to avoid tie rod hole and railing anchor bolts (if applicable).
3. All reinforcing steel to be epoxy coated.

Useable DRAFT

* USEABLE DRAFT *

APPROVAL	
_____ DIRECTOR OFFICE OF BRIDGE DEVEL.	
DATE: 09/01/15	
REVISIONS	
SHA	FHWA

FHWA APPROVAL
DATE:

STATE OF MARYLAND
DEPARTMENT OF TRANSPORTATION
STATE HIGHWAY ADMINISTRATION
OFFICE OF STRUCTURES

SIMPLE SPAN GREATER THAN 50'-0'' TO 55'-0''
EXTERIOR 4'-0'' PRECAST CONCRETE SLAB PANEL
PLAN & ELEVATION

NO. SUP-SLAB(4FT)-802 SHEET 1 OF 2

SUPERSTRUCTURE SLABS

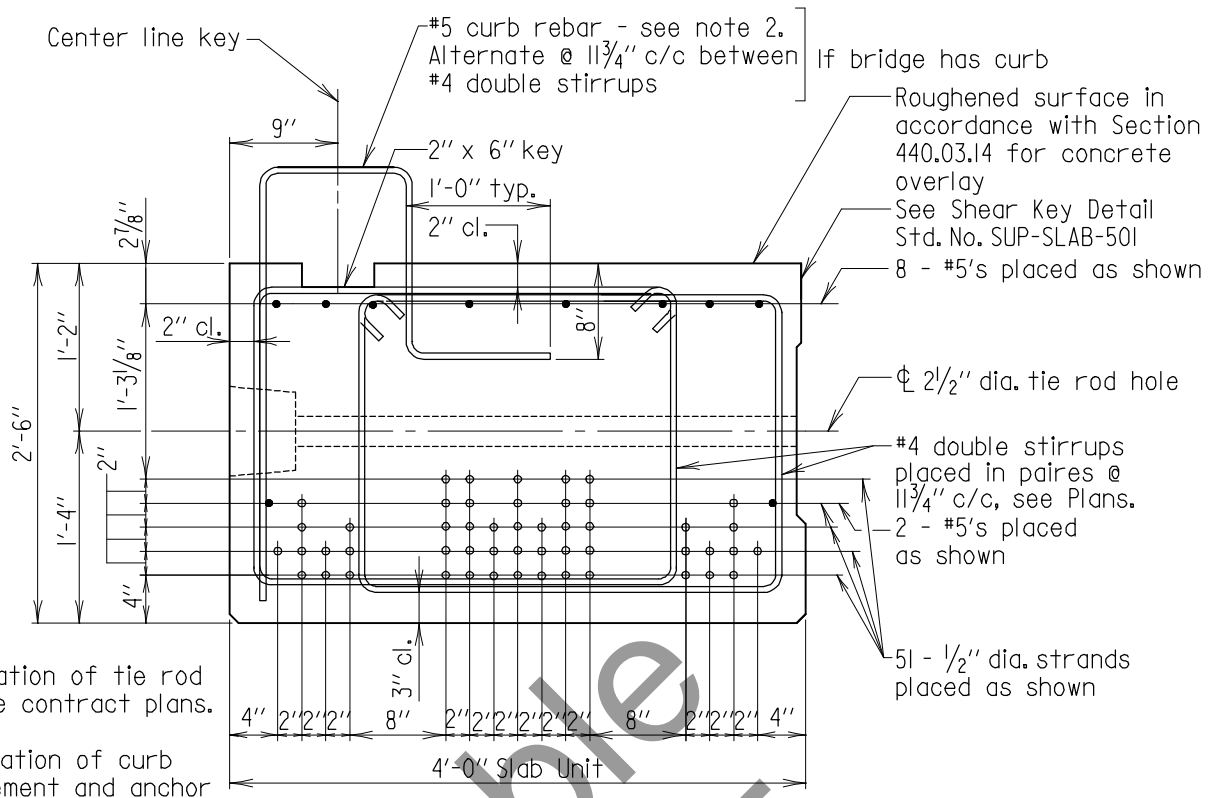

Notes:

1. For location of tie rod holes, see contract plans.

2. For location of curb reinforcement and anchor bolts and plates to be cast in slab for railing, see Std. No. SUP-TB(TR)-301

SECTION - SLAB AT MIDSPAN

Scale: ¾" = 1'-0"

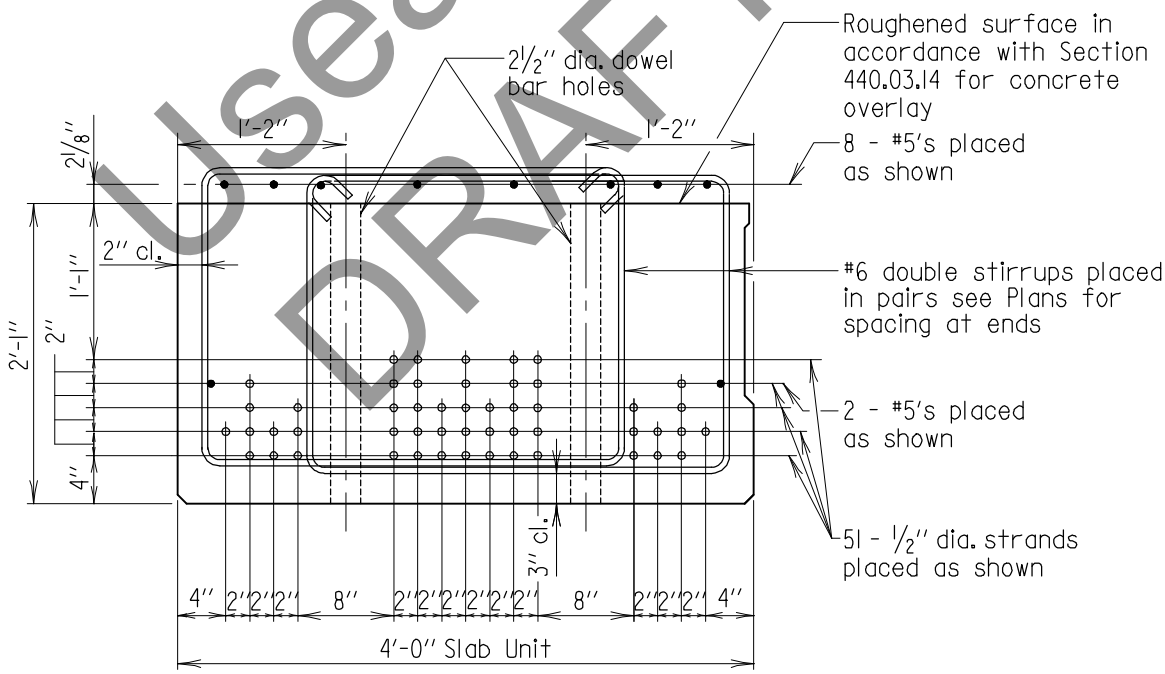

Note:
Extreme care shall be used when placing and tieing the curb rebar, railing and anchor bolts assembly to provide for the required clearances. Any misplaced rebar, dowel bar holes, tie rod holes or anchor bolts will be cause for rejection of the precast slab unit.

SECTION - SLAB AT ENDS

Scale: ¾" = 1'-0"

Useable DRAFT

* USEABLE DRAFT *

APPROVAL	
_____ DIRECTOR OFFICE OF STRUCTURES DATE: 09/01/15	
REVISIONS	
SHA	FHWA

FHWA APPROVAL
DATE:

STATE OF MARYLAND
DEPARTMENT OF TRANSPORTATION
STATE HIGHWAY ADMINISTRATION
OFFICE OF STRUCTURES

SIMPLE SPAN GREATER THAN 50'-0" TO 55'-0" EXTERIOR 4'-0" PRECAST CONCRETE SLAB PANEL SECTIONS

NO. SUP-SLAB(4FT)-802 SHEET 2 OF 2

SUPERSTRUCTURE SLABS

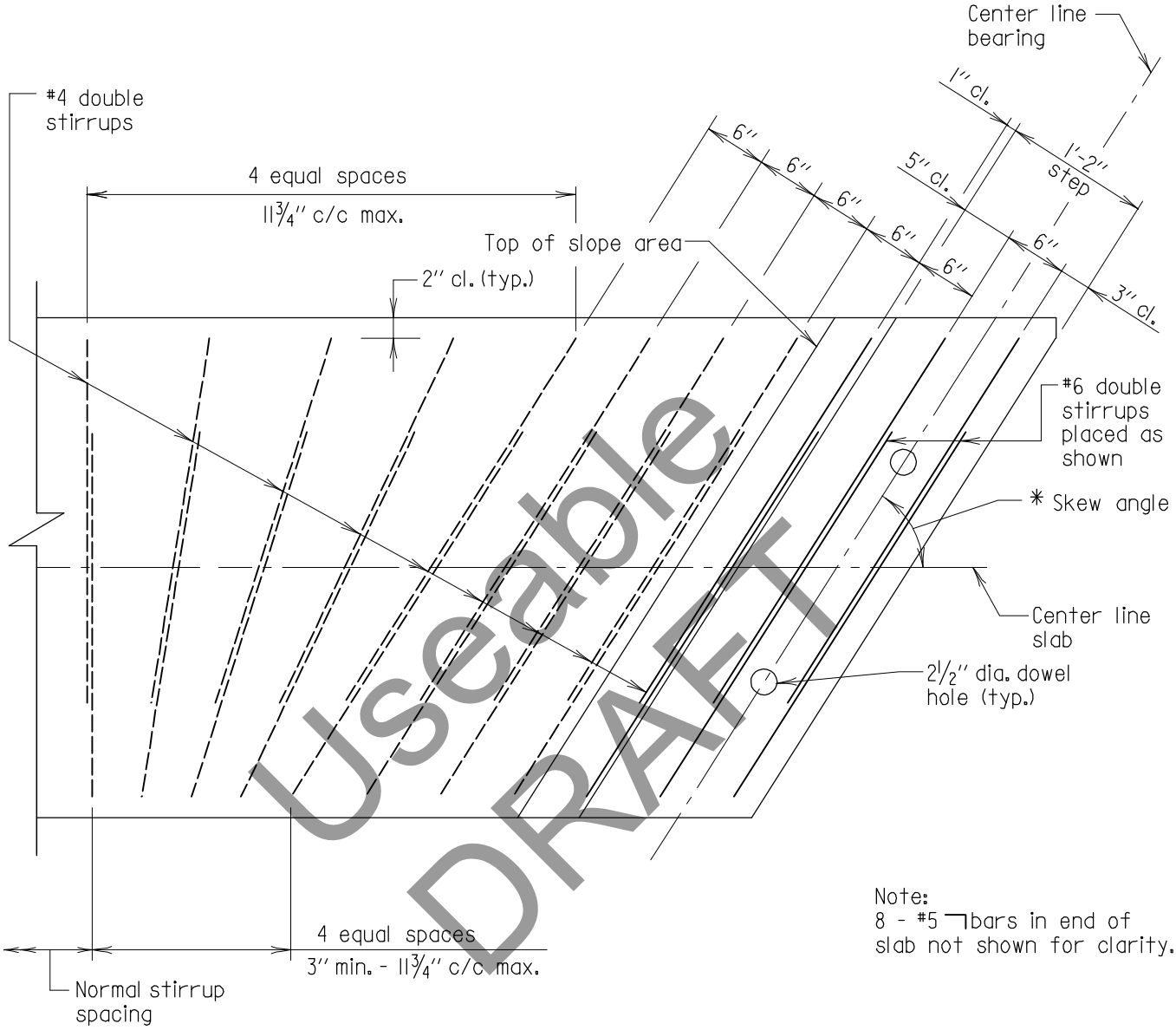

Useable DRAFT

Note:
8 - #5 ⌉bars in end of slab not shown for clarity.

Note to Fabricator:
End stirrup spacing must be laid out to determine spacing.

Note to Designer:
Layout shown works up to a skew angle of 55°. For angles less than 55° designer must layout skewed end detail on plans.

*For exact skew angle, see contract plan sheets.

PLAN
Scale: ¾'' = 1'-0''

* USEABLE DRAFT *

Note:
All reinforcing steel to be epoxy coated.

APPROVAL	
_____ DIRECTOR OFFICE OF BRIDGE DEVEL. DATE: 09/01/15	
REVISIONS	
SHA	FHWA
FHWA APPROVAL	
DATE:	

STATE OF MARYLAND
DEPARTMENT OF TRANSPORTATION
STATE HIGHWAY ADMINISTRATION
OFFICE OF STRUCTURES

SIMPLE SPAN GREATER THAN 50'-0'' TO 55'-0''
INTERIOR 4'-0'' PRECAST CONCRETE SLAB PANEL
SKEWED END DETAIL

NO. SUP-SLAB(4FT)-803 SHEET 1 OF 2

SUPERSTRUCTURE SLABS

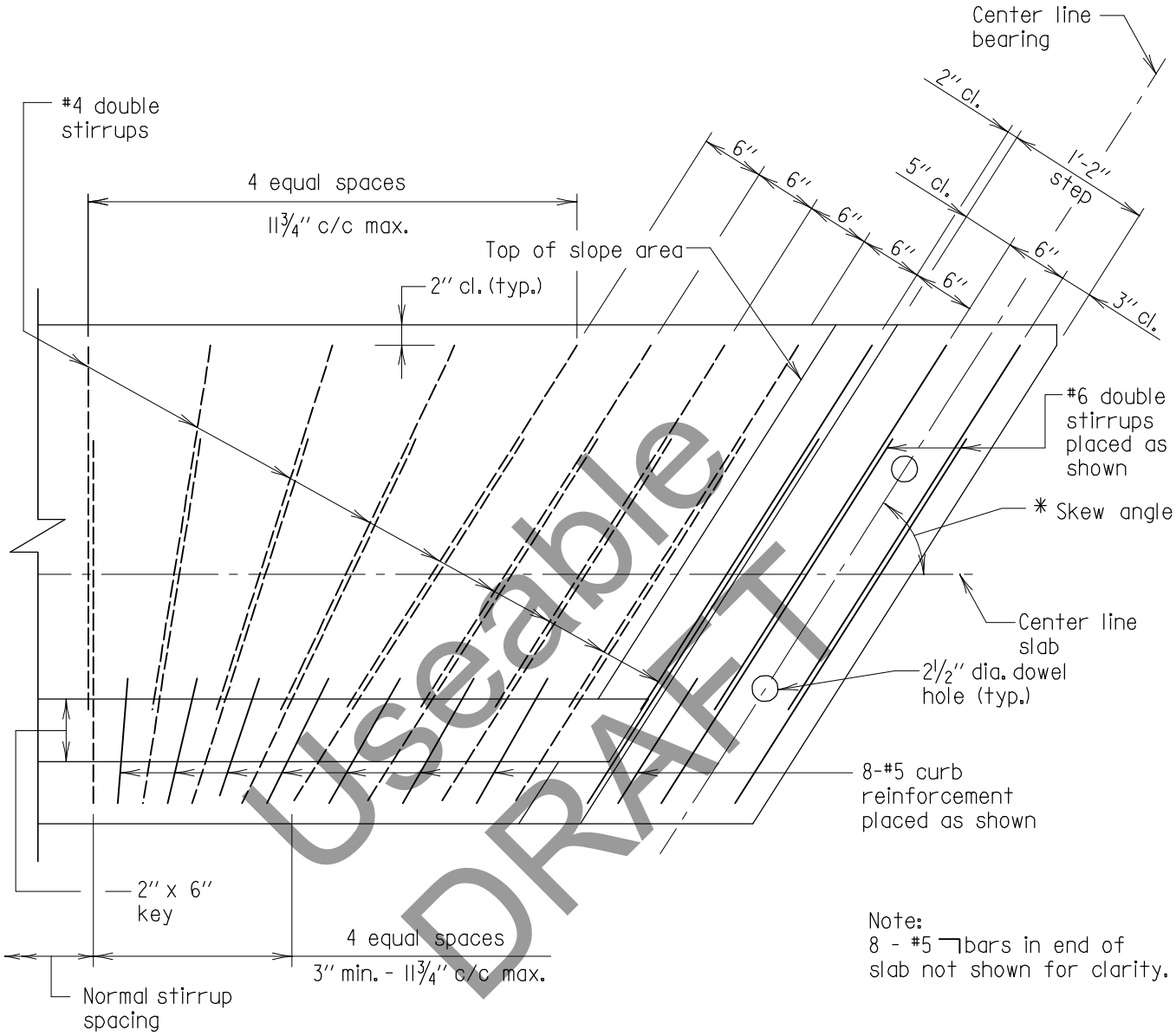

Useable DRAFT

Note:
8 - #5 ⌉bars in end of slab not shown for clarity.

*For exact skew angle, see contract plan sheets.

PLAN
Scale: ¾'' = 1'-0''

Note to Fabricator:
End stirrup spacing must be laid out to determine spacing.

Note to Designer:
Layout shown works up to a skew angle of 55°. For angles less than 55° designer must layout skewed end detail on plans.

* USEABLE DRAFT *

Note:
All reinforcing steel to be epoxy coated.

APPROVAL	
_____ DIRECTOR OFFICE OF BRIDGE DEVEL. DATE: 09/01/15	
REVISIONS	
SHA	FHWA

FHWA APPROVAL
DATE:

STATE OF MARYLAND
DEPARTMENT OF TRANSPORTATION
STATE HIGHWAY ADMINISTRATION
OFFICE OF STRUCTURES

SIMPLE SPAN GREATER THAN 50'-0'' TO 55'-0''
EXTERIOR 4'-0'' PRECAST CONCRETE SLAB PANEL
SKEWED END DETAIL

NO. SUP-SLAB(4FT)-803 SHEET 2 OF 2

SUPERSTRUCTURE SLABS

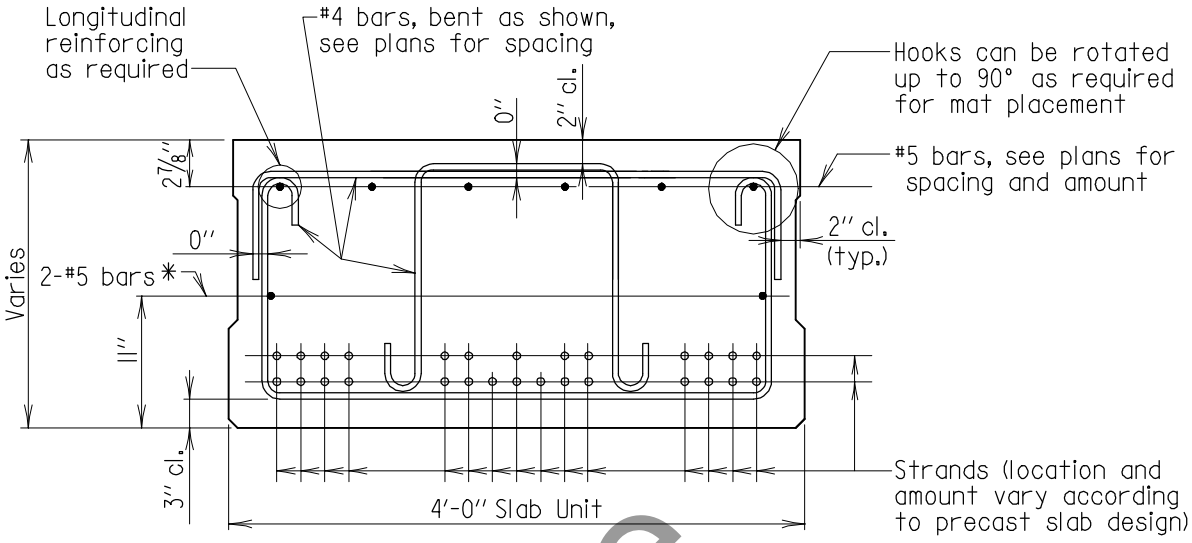

ALTERNATE REINFORCING SECTION - SLAB AT MIDSPAN

Scale: 3/4'' = 1'-0''

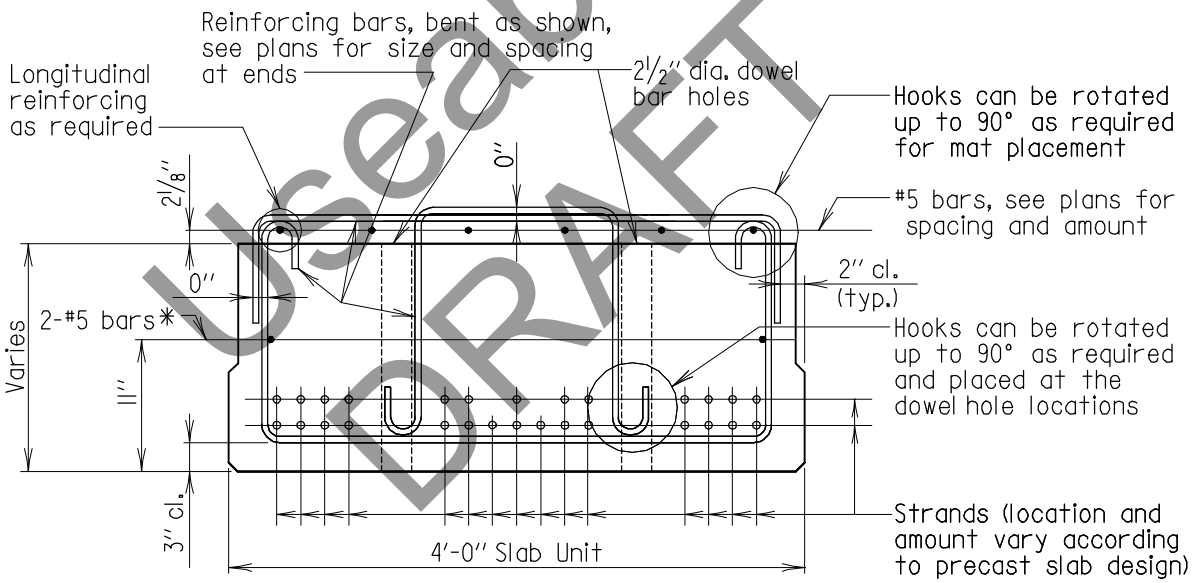

ALTERNATE REINFORCING SECTION - SLAB AT ENDS

Scale: 3/4'' = 1'-0''

Useable DRAFT

* These bars are only required for span lengths greater than 50'-0''.

Note:
All reinforcing steel to be epoxy coated.

* USEABLE DRAFT *

APPROVAL	
_____ DIRECTOR OFFICE OF STRUCTURES DATE: 09/01/15	
REVISIONS	
SHA	FHWA
FHWA APPROVAL	
DATE:	

STATE OF MARYLAND
DEPARTMENT OF TRANSPORTATION
STATE HIGHWAY ADMINISTRATION
OFFICE OF STRUCTURES

INTERIOR 4'-0'' PRECAST CONCRETE SLAB PANEL
ALTERNATE REINFORCING DETAILS

NO. SUP-SLAB(4FT)-901 SHEET 1 OF 2

SUPERSTRUCTURE SLABS

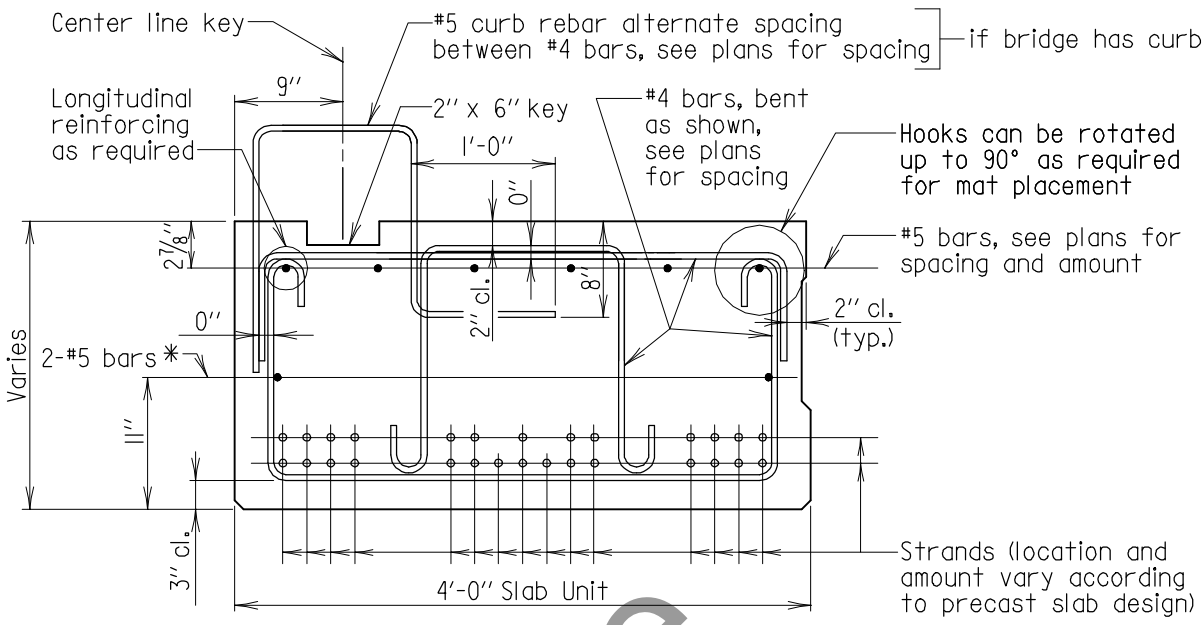

ALTERNATE REINFORCING SECTION - SLAB AT MIDSPAN

Scale: 3/4'' = 1'-0''

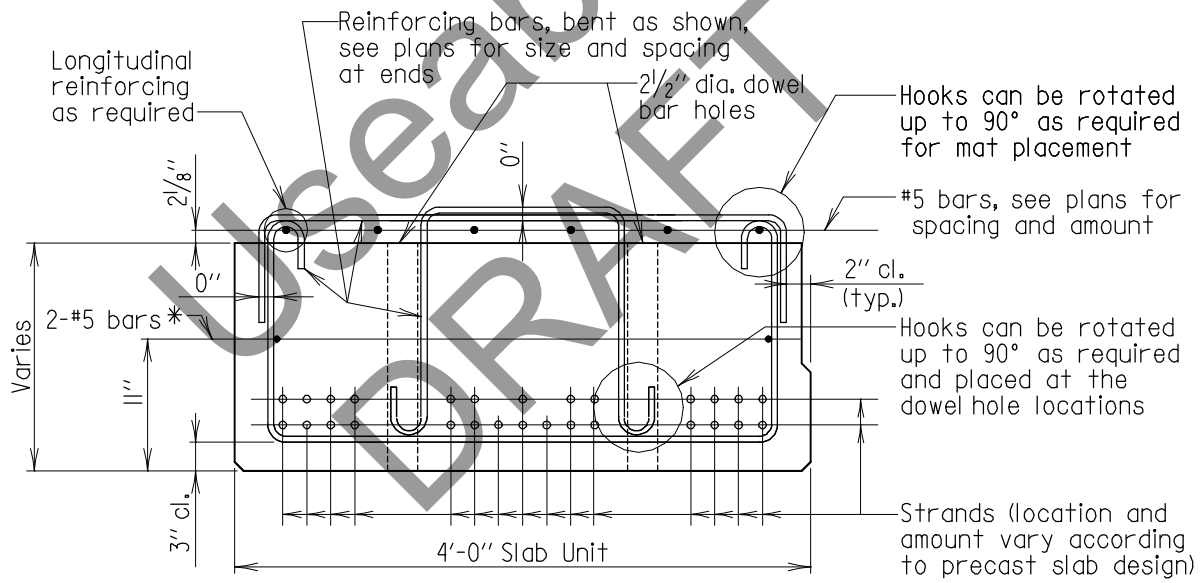

ALTERNATE REINFORCING SECTION - SLAB AT ENDS

Scale: 3/4'' = 1'-0''

Useable DRAFT

* These bars are only required for span lengths greater than 50'-0''.

Note:
All reinforcing steel to be epoxy coated.

* USEABLE DRAFT *

APPROVAL	
_____ DIRECTOR OFFICE OF STRUCTURES DATE: 09/01/15	
REVISIONS	
SHA	FHWA

FHWA APPROVAL
DATE:

STATE OF MARYLAND
DEPARTMENT OF TRANSPORTATION
STATE HIGHWAY ADMINISTRATION
OFFICE OF STRUCTURES

EXTERIOR 4'-0'' PRECAST CONCRETE SLAB PANEL
ALTERNATE REINFORCING DETAILS

NO. SUP-SLAB(4FT)-901 SHEET 2 OF 2

SUPERSTRUCTURE SLABS

SUPERSTRUCTURE

BRIDGE DECK JOINTS

(SUP-JT)

SUPERSTRUCTURE

BRIDGE DECK JOINTS

JOINT CONSTRUCTION DETAILS

(SUP-JT(JC))

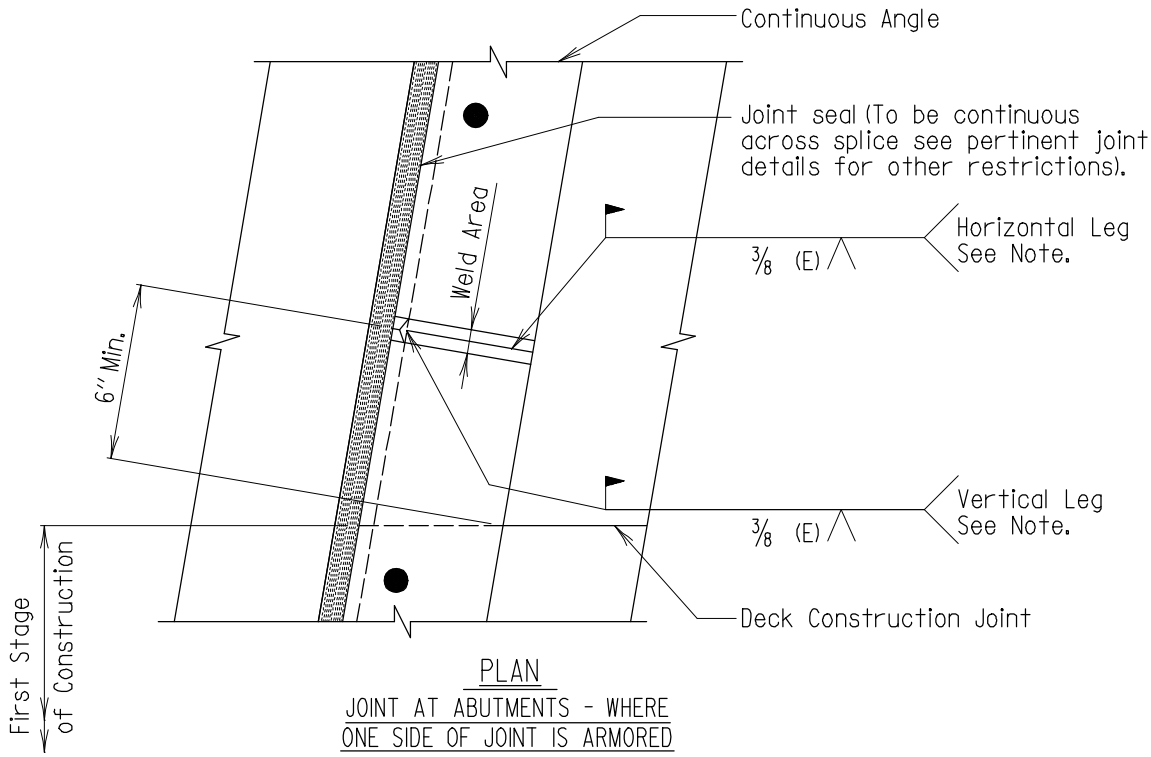

PLAN

JOINT AT ABUTMENTS - WHERE ONE SIDE OF JOINT IS ARMORED

Scale: None

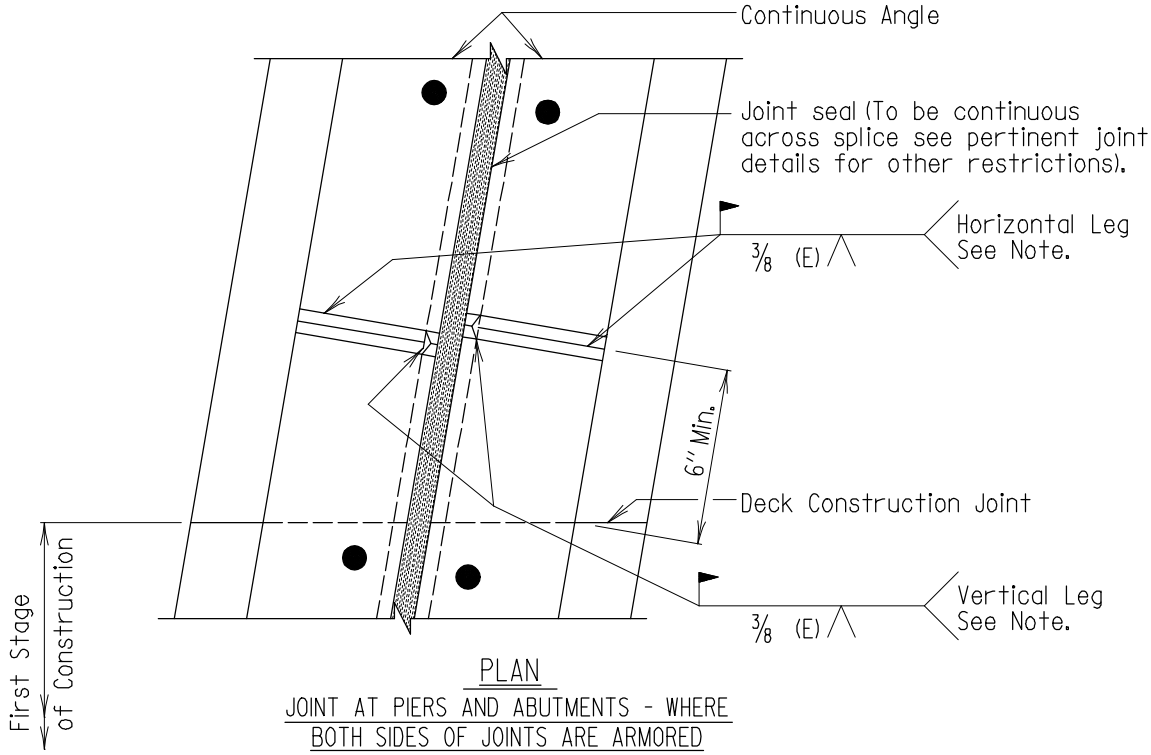

PLAN

JOINT AT PIERS AND ABUTMENTS - WHERE BOTH SIDES OF JOINTS ARE ARMORED

Scale: None

Notes:
The minimum effective throat (E) shall be determined by the angle thickness as follows:
Min. E = 3/16" for thicknesses over 1/4" to 1/2" incl.
Min. E = 1/4" for thicknesses over 1/2" to 3/4" incl.

APPROVAL	
R.S. Freedman DIRECTOR OFFICE OF STRUCTURES	
DATE: 7/28/80	
REVISIONS	
SHA	FHWA
4-10-86	6-8-90
9-3-86	6-8-90
9-16-11	
11-9-11	

FHWA APPROVAL	
DATE: 10-3-80	

STATE OF MARYLAND
DEPARTMENT OF TRANSPORTATION
STATE HIGHWAY ADMINISTRATION
OFFICE OF STRUCTURES

ROADWAY JOINT ANGLE SPLICES FOR SEQUENTIAL CONSTRUCTION

STANDARD NO. SUP-JT(JC)-101 SHEET 1 OF 1

SUPER-ROADWAY JOINTS

OLD NO. BR-SS(7.09)-80-113

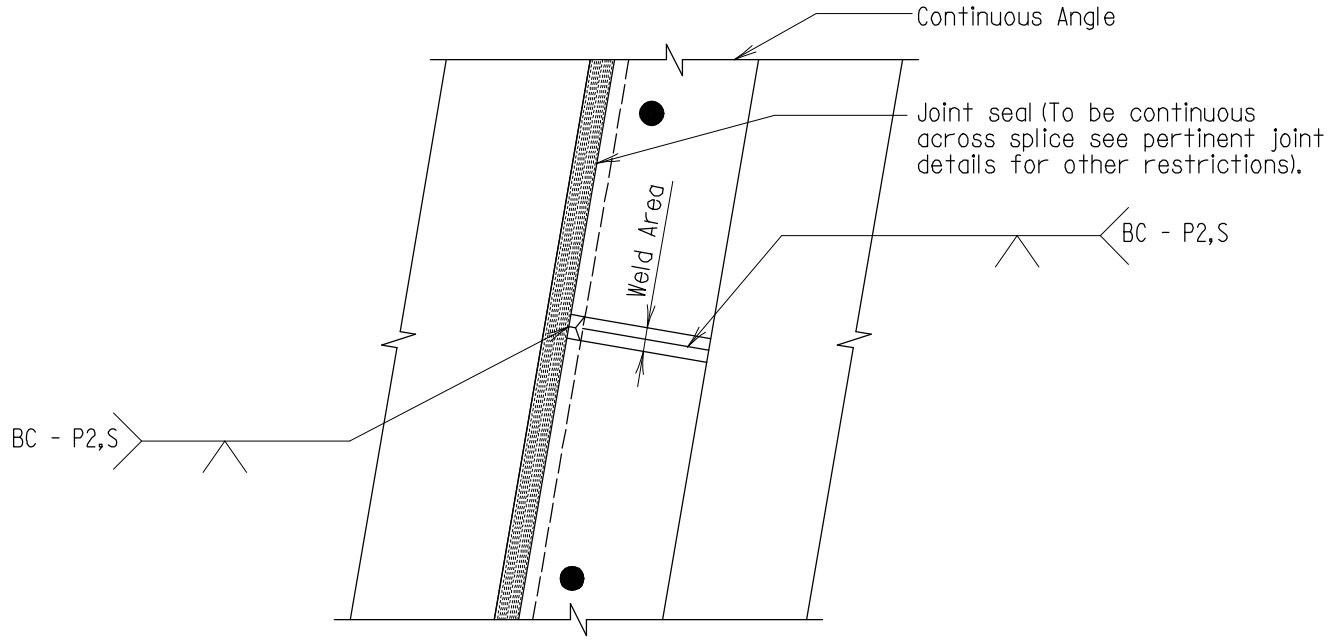

PLAN

JOINT AT ABUTMENTS - WHERE ONE SIDE OF JOINT IS ARMORED

Scale: None

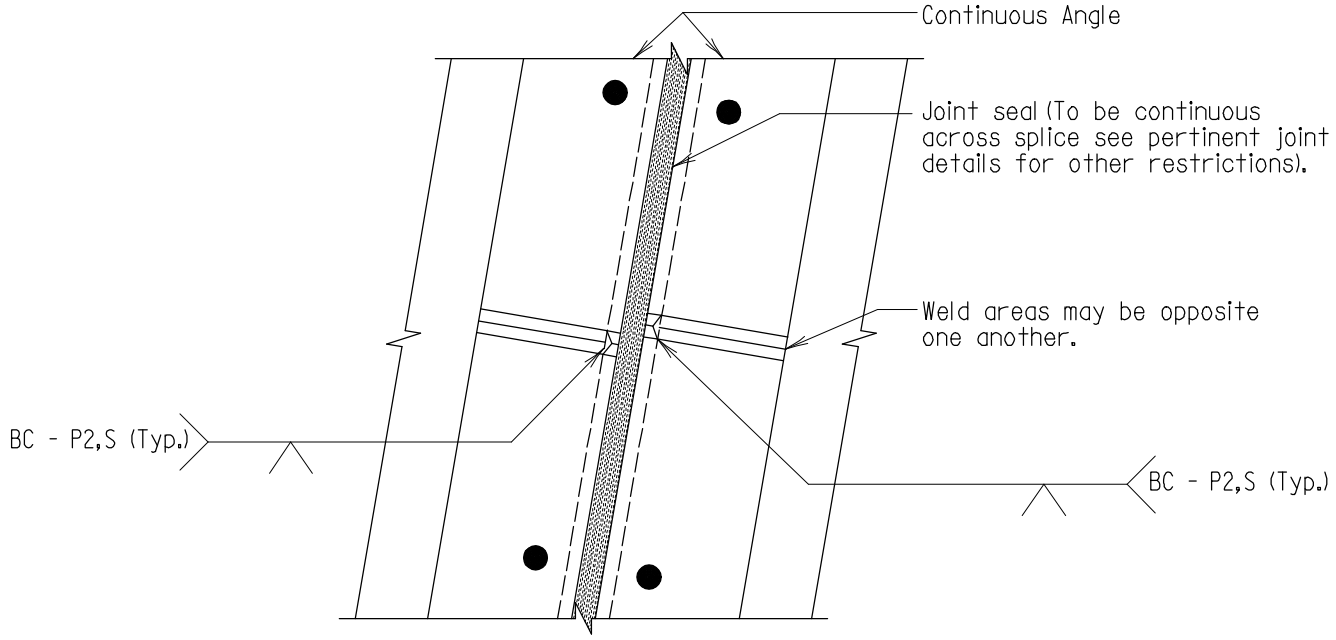

PLAN

JOINT AT PIERS AND ABUTMENTS - WHERE BOTH SIDES OF JOINTS ARE ARMORED

Scale: None

Note:
Whenever possible the need for this splice should be limited. Preferably, the minimum spacing between joints shall be 40'. If there are breaks in the crown or if the joint is skewed; splices may be made at all breaks in slope and may follow the direction of centerline of bridge instead of being perpendicular to center line of bearing.

APPROVAL		
E.S. Freedman DIRECTOR OFFICE OF STRUCTURES DATE: 1/14/87		
REVISIONS		
SHA	FHWA	
1-22-01		
9-16-11		
FHWA APPROVAL DATE: 6-8-90		

STATE OF MARYLAND
DEPARTMENT OF TRANSPORTATION
STATE HIGHWAY ADMINISTRATION
OFFICE OF STRUCTURES

ROADWAY JOINT ANGLE SHOP SPLICES FOR NON-SEQUENTIAL CONSTRUCTION

STANDARD NO. SUP-JT(JC)-102 SHEET 1 OF 1

SUPER-JOINTS

OLD NO. BR-SS(7.15)-86-198

SUPERSTRUCTURE

BRIDGE DECK JOINTS

JOINT SEAL DETAILS

(SUP-JT(JS))

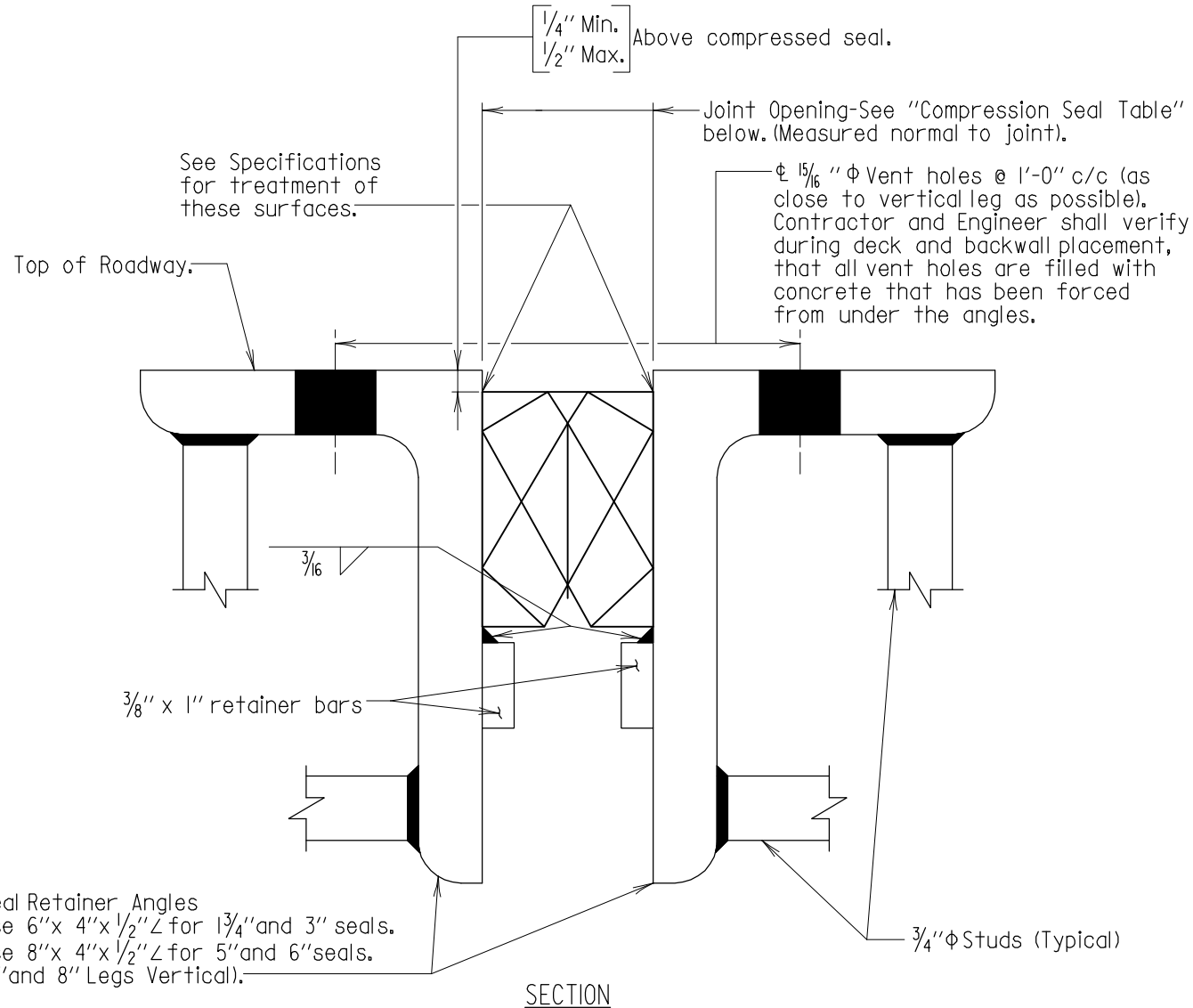

SECTION
Scale: 3"=1'-0"

COMPRESSION SEAL TABLE

Location	Uncompressed Seal Width	Joint Opening @						Movement Rating
		40°F	50°F	60°F	70°F	80°F	90°F	
	1 3/4"			1 1/8"				0.66"
	3"			1 15/16"				1.25"
	5"			3"				2.50"
	6"			3 5/8"				2.85"

Note:
1. The 1 3/4" and 3" seals to be one piece for full length of seal (no joints).
2. The 5" and 6" seals may have one shop splice per joint, if the length of joint exceeds 50'. Splice shall be at least 15' from gutter line.

APPROVAL	
E.S. Friedman DIRECTOR OFFICE OF STRUCTURES	
DATE: 1/6/78	
REVISIONS	
SHA	FHWA
3-20-01	
1-7-02	
7-19-06	
09-24-15	

FHWA APPROVAL	
DATE: 1-31-78	

STATE OF MARYLAND
DEPARTMENT OF TRANSPORTATION
STATE HIGHWAY ADMINISTRATION
OFFICE OF STRUCTURES

COMPRESSION SEAL JOINT AND RETAINING ANGLE DETAIL

STANDARD NO. SUP-JT(JS)-101 SHEET 1 OF 1

SUPER-ROADWAY JOINTS

OLD NO. BR-SS(7.01)-77-63

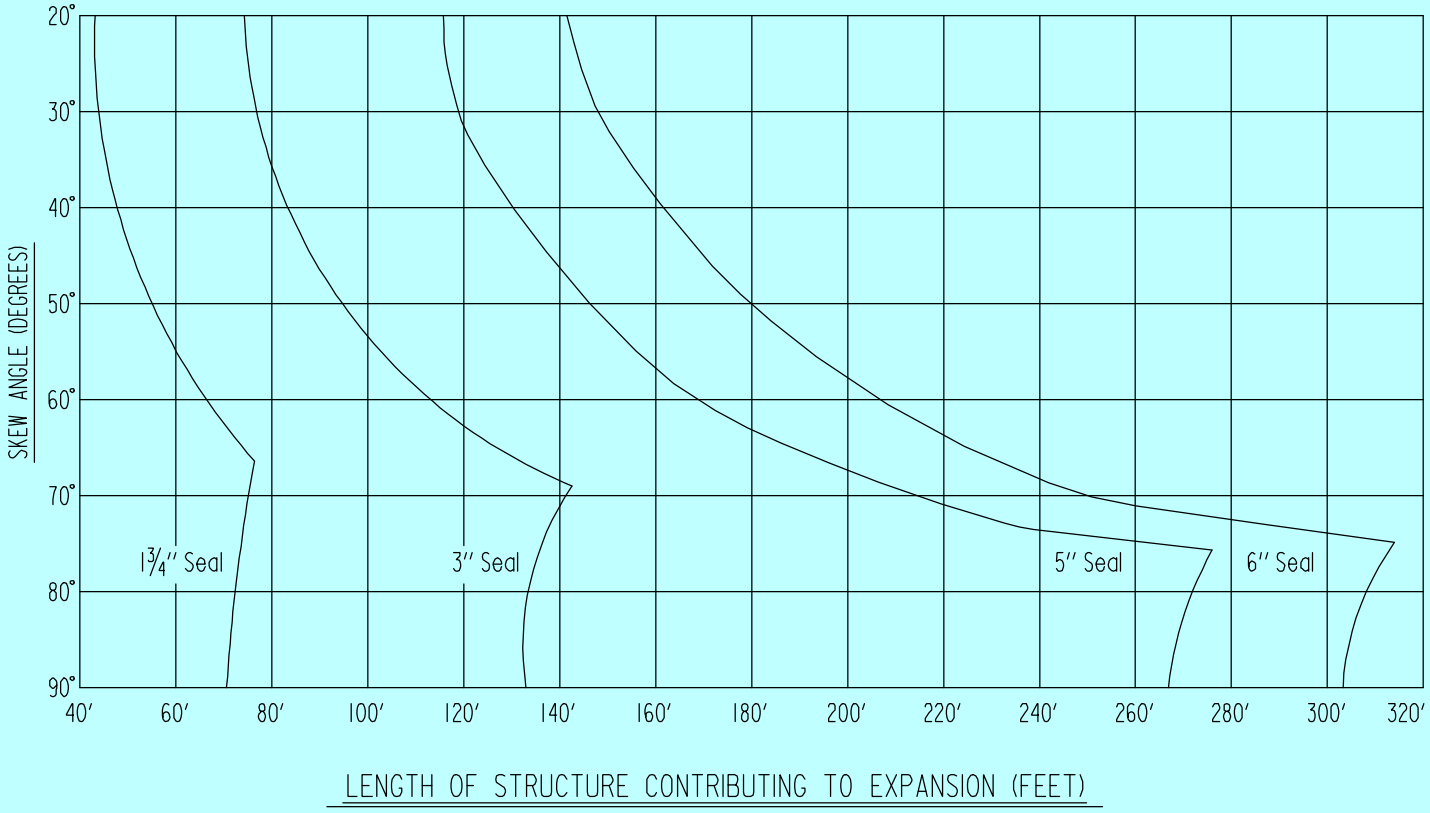

PREFORMED COMPRESSION SEALS		
Seal Width	Total Allow Movement	Joint Opening @ 60°F
1¾"	0.66"	1⅛"
3"	1.25"	1 15/16"
5"	2.50"	3"
6"	2.85"	3⅝"

Note:
Seal opening at 60°F based on a temperature variation of 0°F to 120°F.

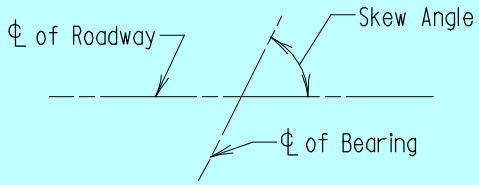

SKEW ANGLE
Scale: None

* FOR OFFICE USE ONLY *

APPROVAL	
R.S. Freedman DIRECTOR OFFICE OF STRUCTURES	
DATE: 4/12/78	
REVISIONS	
SHA	FHWA
10-1-82	11-29-85

FHWA APPROVAL
DATE: 10-17-78

STATE OF MARYLAND
DEPARTMENT OF TRANSPORTATION
STATE HIGHWAY ADMINISTRATION
OFFICE OF STRUCTURES

PREFORMED COMPRESSION SEAL SELECTION CHART

STANDARD NO. SUP-JT(JS)-102 SHEET 1 OF 1

SUPER - ROADWAY JOINTS

OLD NO. BR-SS(7.06)-78-71

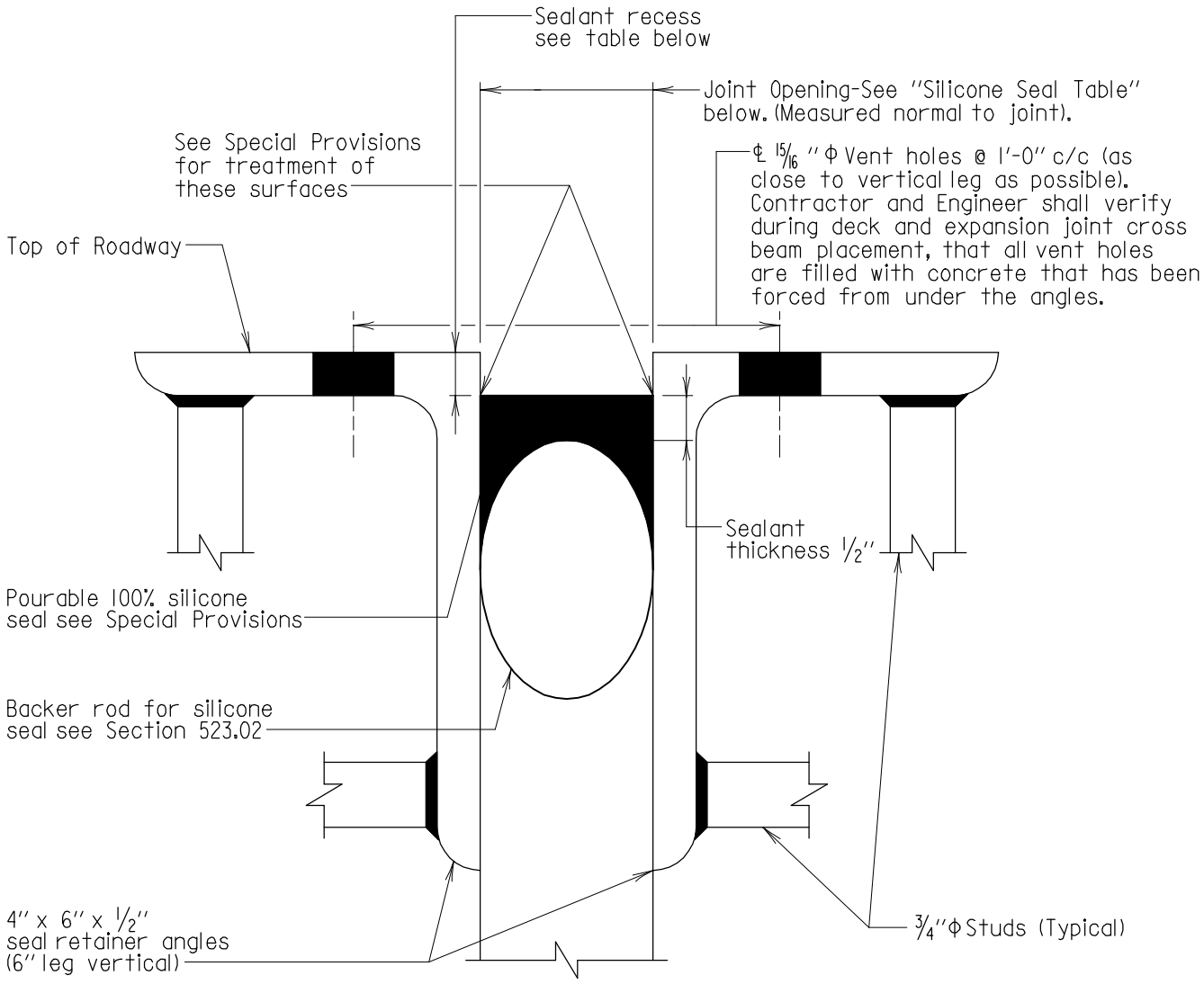

SECTION
Scale: 6"=1'-0"

SILICONE SEAL TABLE

Location	Max. length contributing to expansion*		Sealant Recess	Joint Opening Minimum	Joint Opening Maximum	Joint Opening @						
	Steel beam	Concrete beam				40°F	50°F	60°F	70°F	75°F	80°F	90°F
	150'	185'	1/2"	1/2"	2"					1"		
	225'	275'	1/2"	3/4"	3"					1 1/2"		
	300'	370'	1/2"	1"	4"					2"		
	375'	460'	1/2"	1 1/4"	5"					2 1/2"		
	450'	555'	5/8"	1 1/2"	6"					3"		

Notes:
*1. These lengths do not need to be adjusted for skew angle.
2. Joint area to be thoroughly cleaned in accordance with joint manufacturers recommendations just prior to placing of seal.

APPROVAL	
E.S. Freedman DIRECTOR OFFICE OF STRUCTURES	
DATE: 3/7/13	
REVISIONS	
SHA	FHWA
FHWA APPROVAL	
DATE:	

STATE OF MARYLAND
DEPARTMENT OF TRANSPORTATION
STATE HIGHWAY ADMINISTRATION
OFFICE OF STRUCTURES

SILICONE SEAL JOINT AND
RETAINER ANGLE DETAIL

STANDARD NO. SUP-JT(JS)-201 SHEET 1 OF 1

SUPER-JOINTS

OLD NO. BR-SS(7.20)-13-398

SUPERSTRUCTURE

BRIDGE DECK JOINTS

FIXED JOINTS

Fixed Joints or Lengths Contributing to Expansion ≤ 70’

(SUP-JT(FIX))

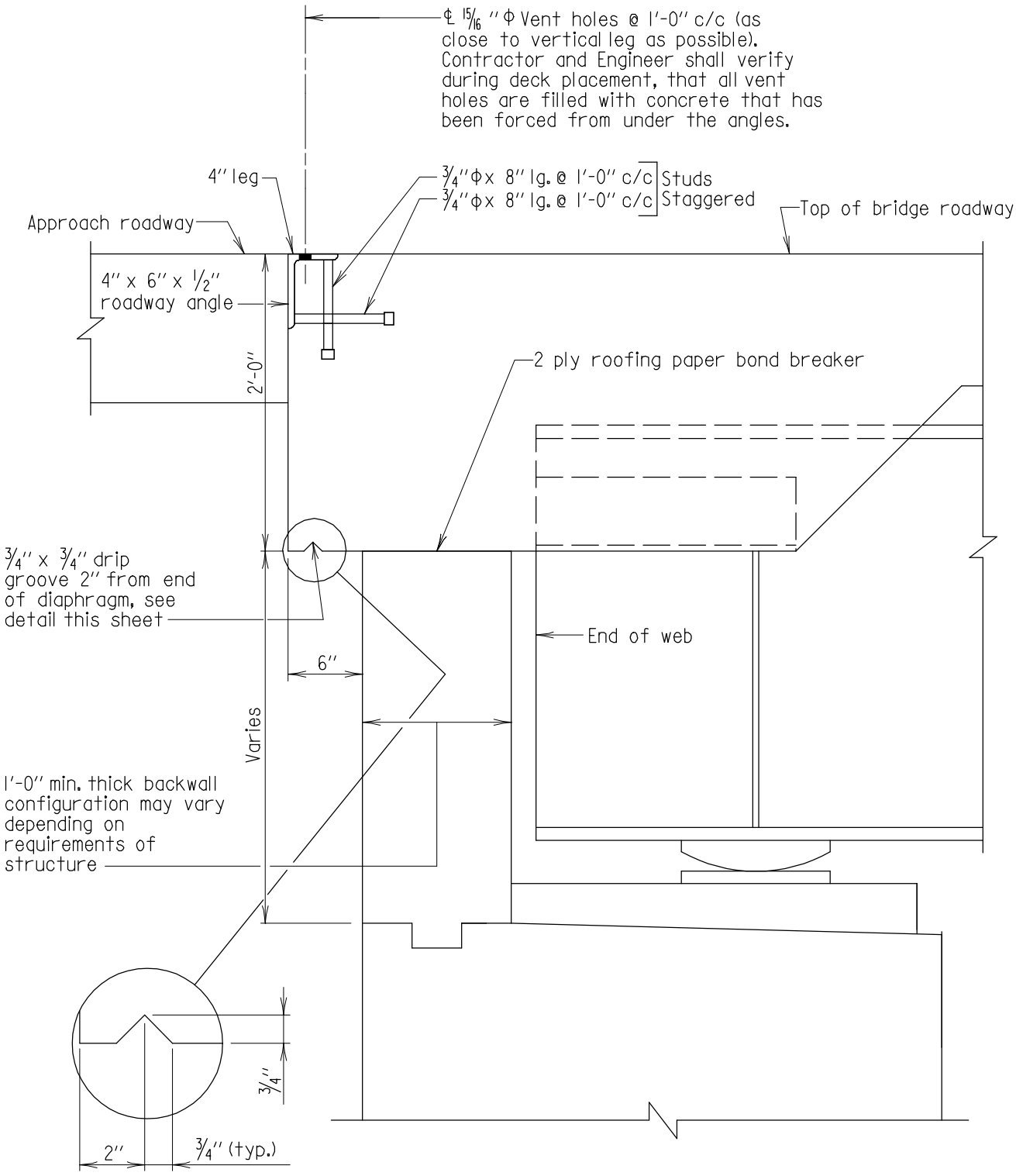

DRIP GROOVE DETAIL

Scale: 3" = 1'-0"

SECTION

Scale: 1" = 1'-0"

APPROVAL	
E.S. Freedman DIRECTOR OFFICE OF STRUCTURES DATE: 12/20/11	
REVISIONS	
SHA	FHWA
2-28-13	
6-26-13	
3-18-14	

FHWA APPROVAL	
DATE:	

STATE OF MARYLAND
DEPARTMENT OF TRANSPORTATION
STATE HIGHWAY ADMINISTRATION
OFFICE OF STRUCTURES

ROADWAY JOINT AT ABUTMENTS CARRYING STEEL GIRDERS WITH STEEL FIXED BEARINGS OR STEEL EXPANSION BEARINGS WITH LENGTH CONTRIBUTING TO EXPANSION ≤ 70 FEET

STANDARD NO. SUP-JT(FIX)-101 SHEET 1 OF 1

SUPER-JOINTS

OLD NO. BR-SS(7.19)-11-393

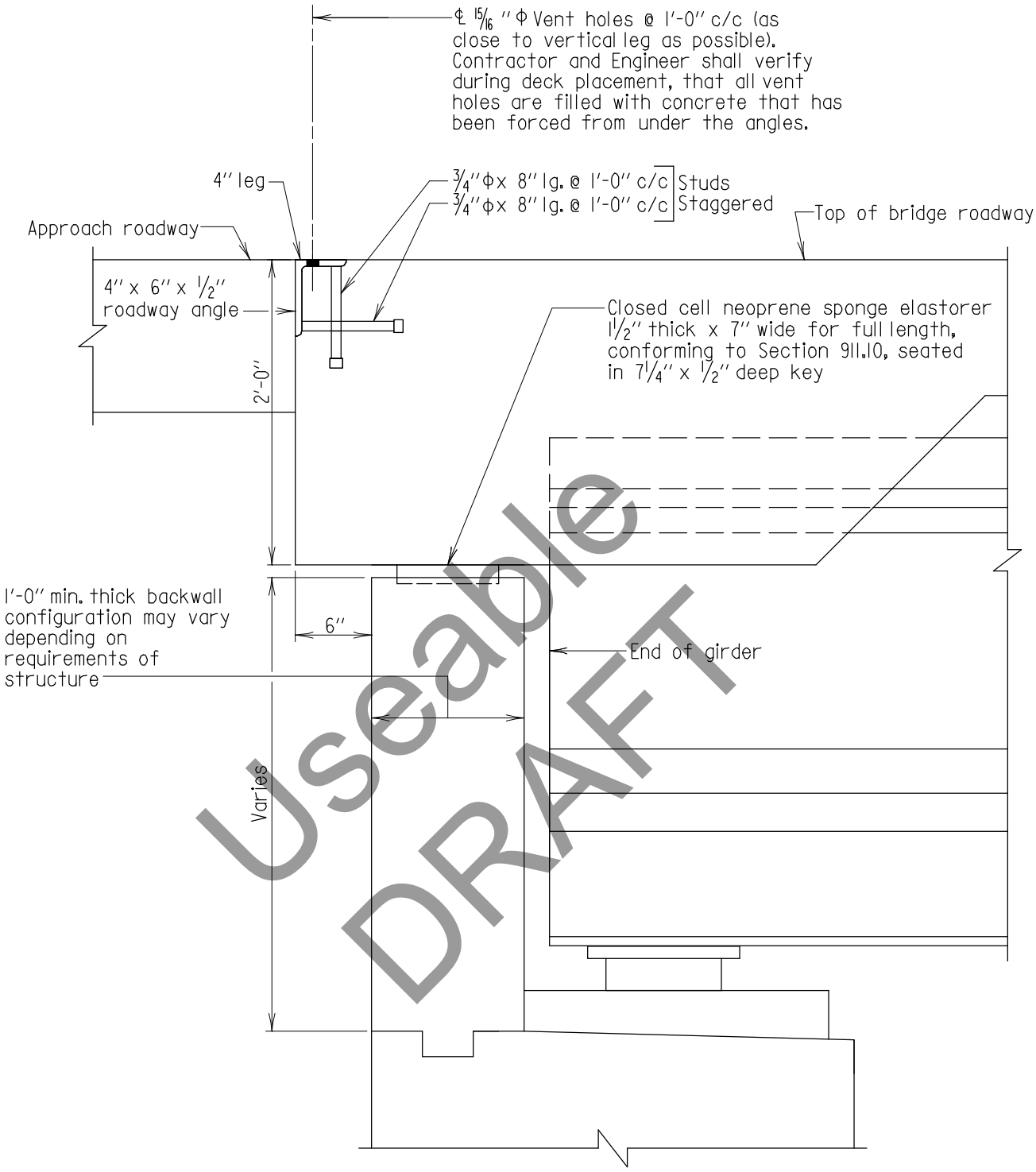

Useable DRAFT

SECTION

Scale: 1" = 1'-0"

* USEABLE DRAFT *

APPROVAL	
_____ DIRECTOR OFFICE OF STRUCTURES	
DATE: 09/01/15	
REVISIONS	
SHA	FHWA

FHWA APPROVAL

DATE:

STATE OF MARYLAND
DEPARTMENT OF TRANSPORTATION
STATE HIGHWAY ADMINISTRATION
OFFICE OF STRUCTURES

ROADWAY JOINT AT ABUTMENTS CARRYING PRESTRESSED CONCRETE GIRDERS WITH ELASTOMERIC FIXED BEARINGS OR EXPANSION BEARINGS WITH LENGTH CONTRIBUTING TO EXPANSION ≤ 70 FT.

NO. SUP-JT(FIX)-201 SHEET 1 OF 1

SUPER BRIDGE DECK JOINTS

Note:
Parapet configuration and number of conduit ducts varies - see Typical Section on pertinent bridge plans.

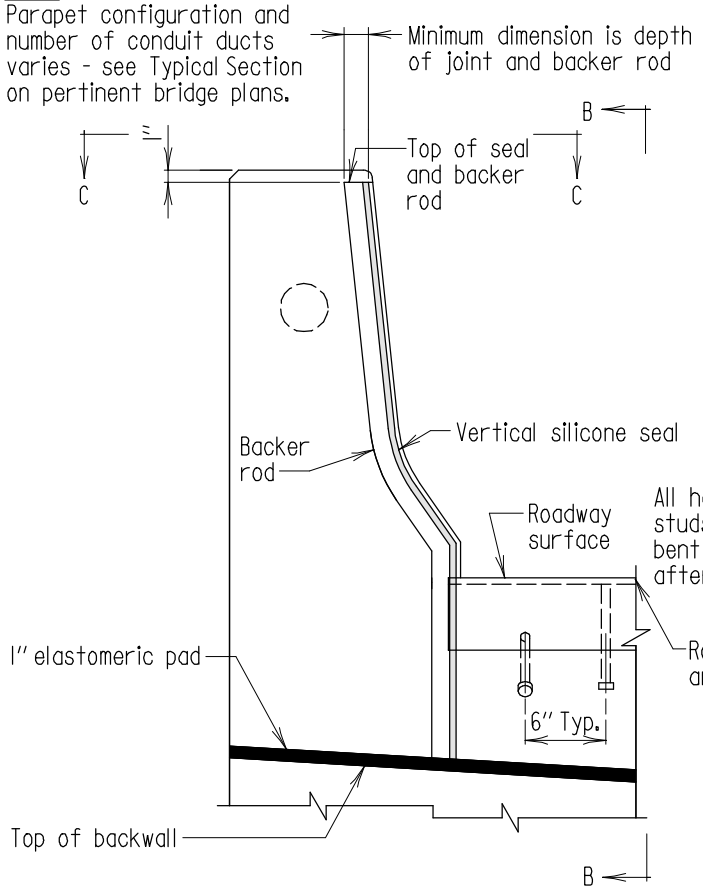

ELEVATION - SECTION A-A
Scale: 3/4" = 1'-0"

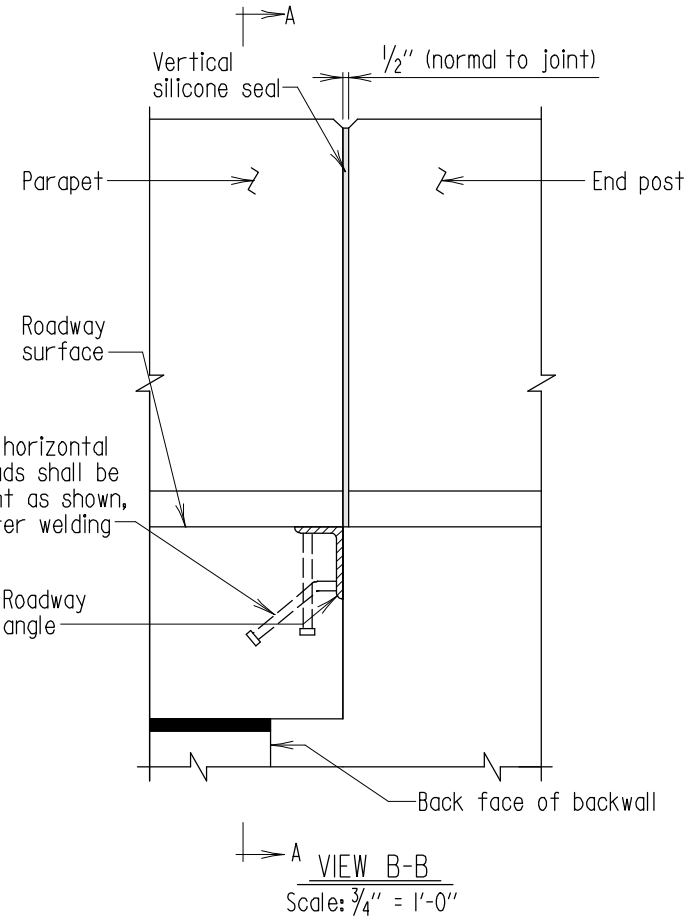

VIEW B-B
Scale: 3/4" = 1'-0"

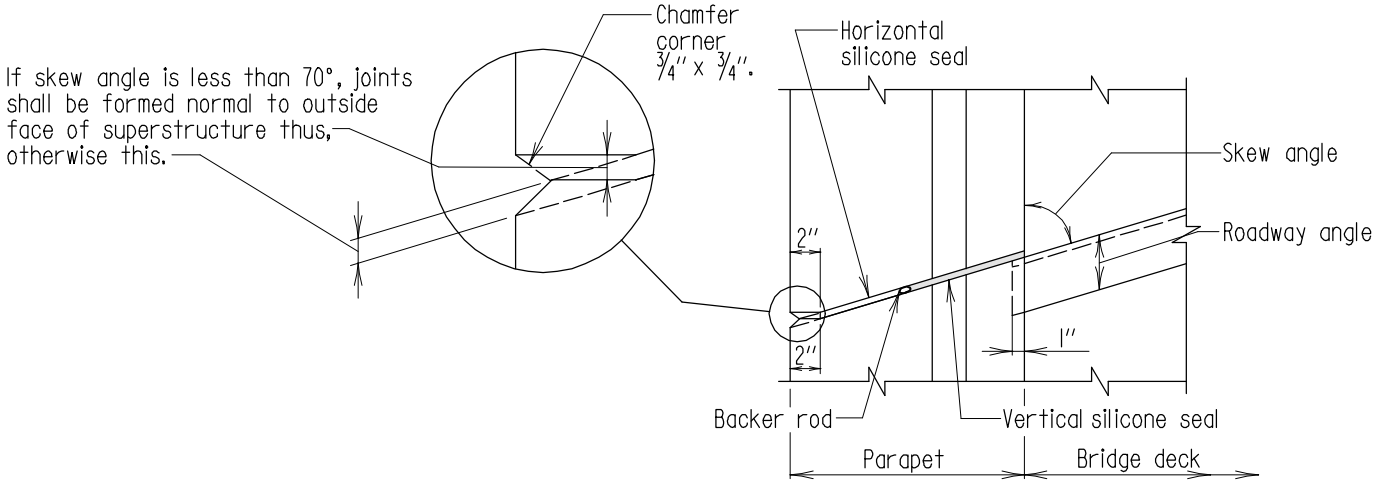

VIEW C-C
Scale: 3/4" = 1'-0"

42'' PARAPET

Note:
1. All studs shall 3/4"Φ-8" long
2. Section A-A & B-B shown 90° skew.
3. Roadway angle to be painted ASTM A 709 Grade 36.
4. Joint area to be thoroughly cleaned in accordance with joint manufacturer's recommendations just prior to placing of seal.

APPROVAL
E.S. Freedman DIRECTOR OFFICE OF STRUCTURES
DATE: 12/12/79

REVISIONS	
SHA	FHWA
4-27-04	
3-29-12	
6-26-13	
12-11-13	

FHWA APPROVAL
DATE: 4-4-80

STATE OF MARYLAND
DEPARTMENT OF TRANSPORTATION
STATE HIGHWAY ADMINISTRATION
OFFICE OF STRUCTURES

FULL HEIGHT ROADWAY JOINT
FOR 42'' F-SHAPE PARAPET FOR BRIDGES WITH FIXED BEARINGS OR EXPANSION BEARINGS WITH LENGTH CONTRIBUTING TO EXPANSION ≤ 70 FT.

STANDARD NO. SUP-JT(FIX)-301 SHEET 1 OF 1

SUPER - ROADWAY JOINTS

OLD NO. BR-SS(7.08)-03-97A

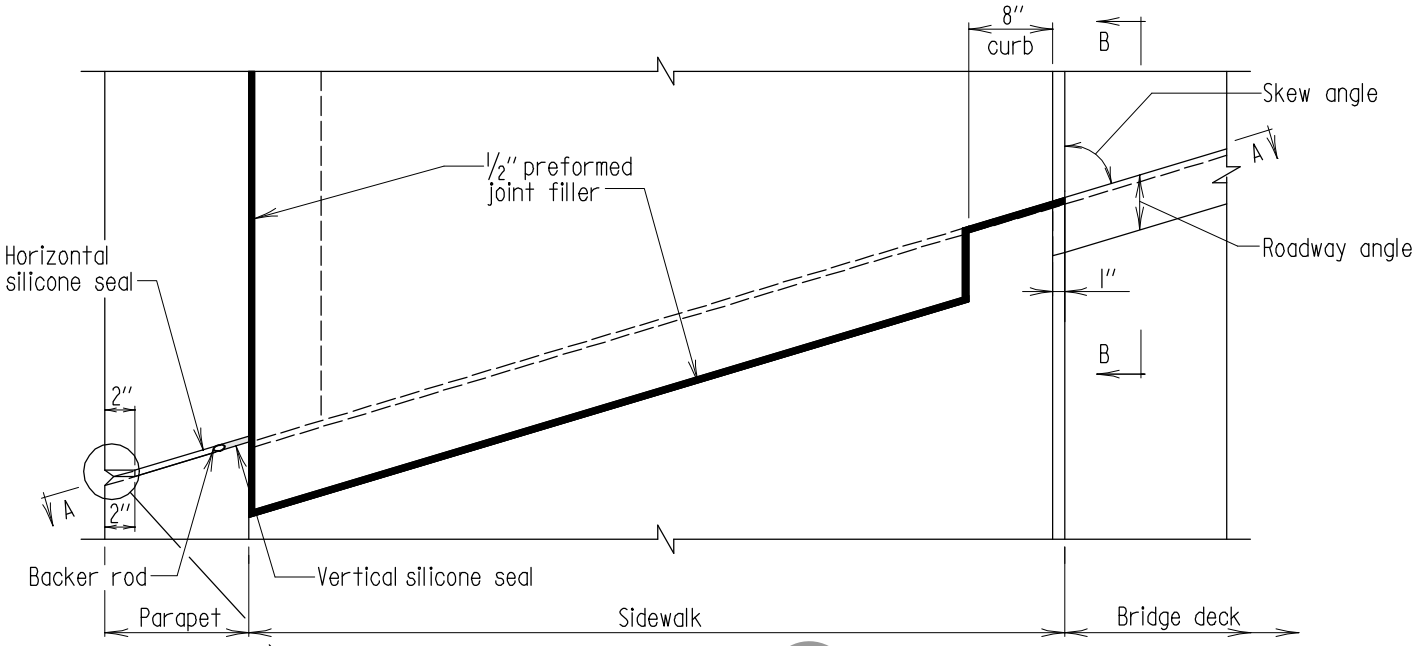

PLAN
Scale: 3/4" = 1'-0"

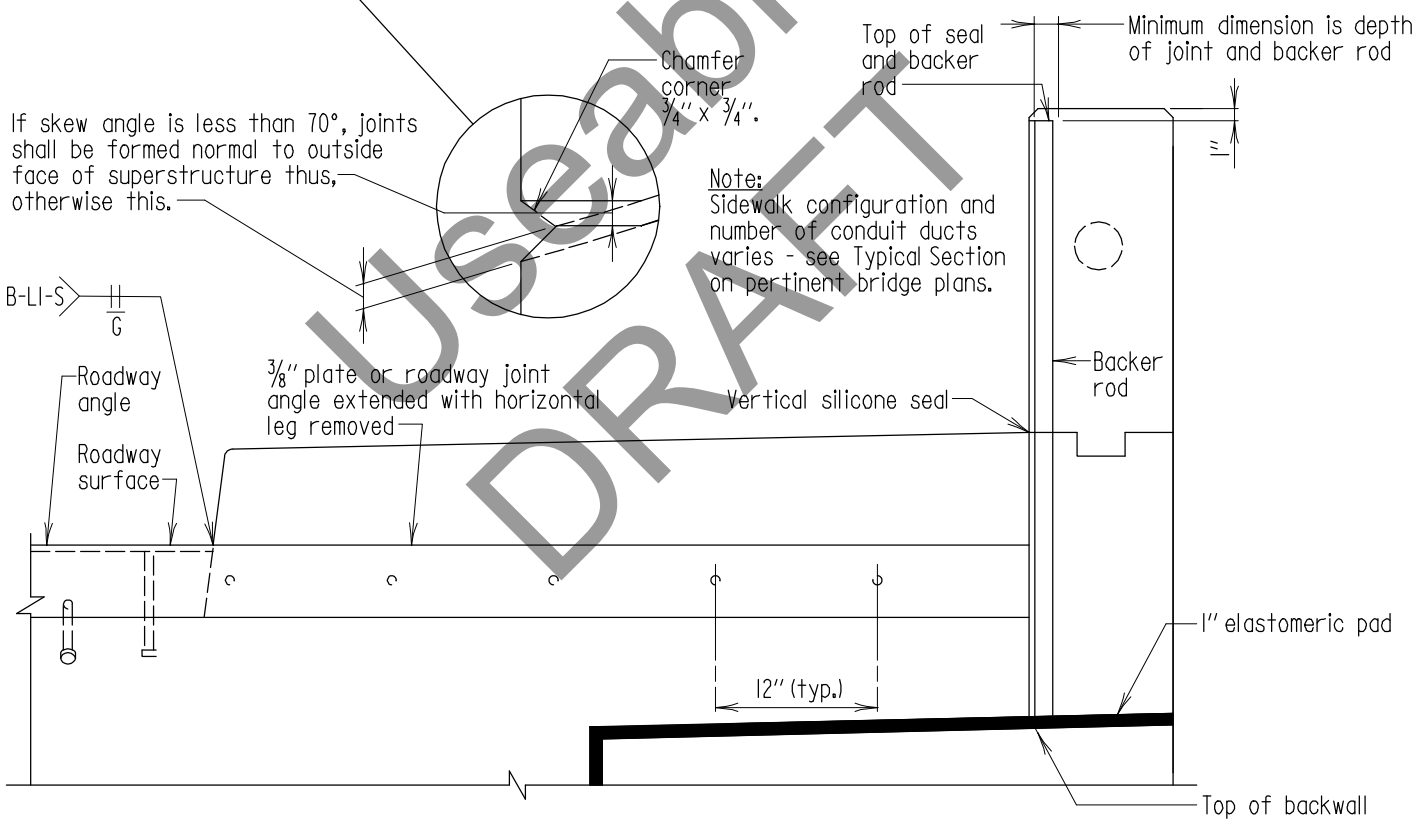

ELEVATION - SECTION A-A
Scale: 3/4" = 1'-0"

Useable DRAFT

Notes:
1. All studs shall 3/4"Φ-8" long
2. Section A-A & B-B shown 90° skew.
3. Roadway angle to be painted ASTM A 709 Grade 36.
4. Joint area to be thoroughly cleaned in accordance with joint manufacturer's recommendations just prior to placing of seal.
5. For View B-B see sheet 2 of 2.

* USEABLE DRAFT *

APPROVAL	
_____ DIRECTOR OFFICE OF STRUCTURES	
DATE: 09/01/15	
REVISIONS	
SHA	FHWA
FHWA APPROVAL	
DATE:	

STATE OF MARYLAND
DEPARTMENT OF TRANSPORTATION
STATE HIGHWAY ADMINISTRATION
OFFICE OF STRUCTURES

FULL HEIGHT ROADWAY JOINT
AT SIDEWALKS FOR BRIDGES WITH
FIXED BEARINGS OR EXPANSION BEARINGS WITH
LENGTH CONTRIBUTING TO EXPANSION ≤ 70 FT.

NO. SUP-JT(FIX)-401 SHEET 1 OF 2

SUPER BRIDGE DECK JOINTS

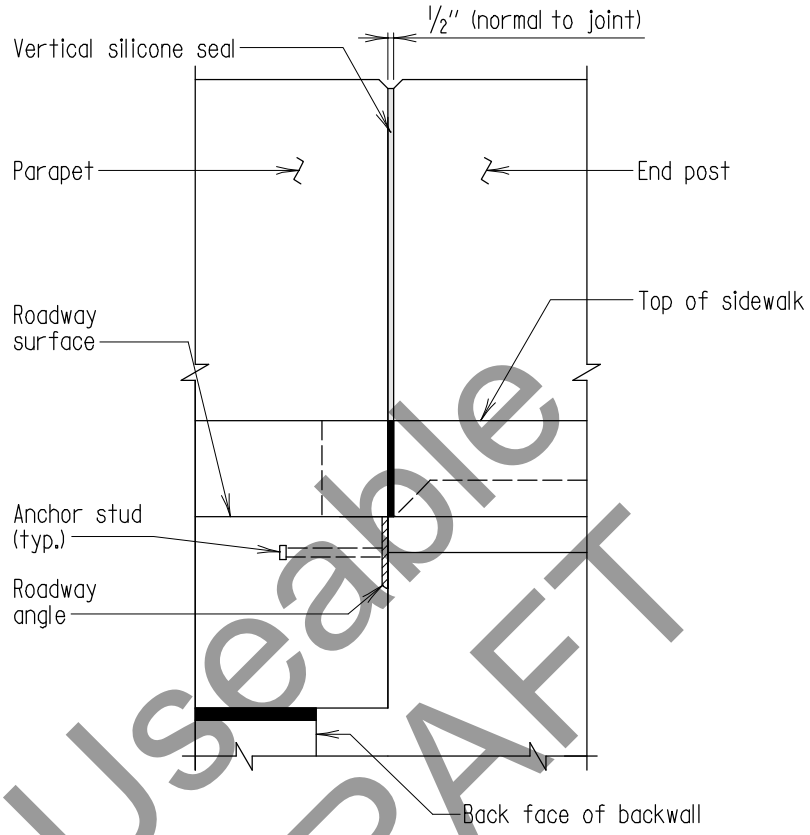

VIEW B-B
Scale: 3/4" = 1'-0"

Useable DRAFT

* USEABLE DRAFT *

APPROVAL	
_____ DIRECTOR OFFICE OF STRUCTURES	
DATE: 09/01/15	
REVISIONS	
SHA	FHWA

FHWA APPROVAL	
DATE:	

STATE OF MARYLAND
DEPARTMENT OF TRANSPORTATION
STATE HIGHWAY ADMINISTRATION
OFFICE OF STRUCTURES

FULL HEIGHT ROADWAY JOINT
AT SIDEWALKS FOR BRIDGES WITH
FIXED BEARINGS OR EXPANSION BEARINGS WITH
LENGTH CONTRIBUTING TO EXPANSION ≤ 70 FT.

NO. SUP-JT(FIX)-401 SHEET 2 OF 2

SUPER BRIDGE DECK JOINTS

SUPERSTRUCTURE

BRIDGE DECK JOINTS

EXPANSION JOINTS

Lengths Contributing to Expansion ≥ 70’

(SUP-JT(EXP))

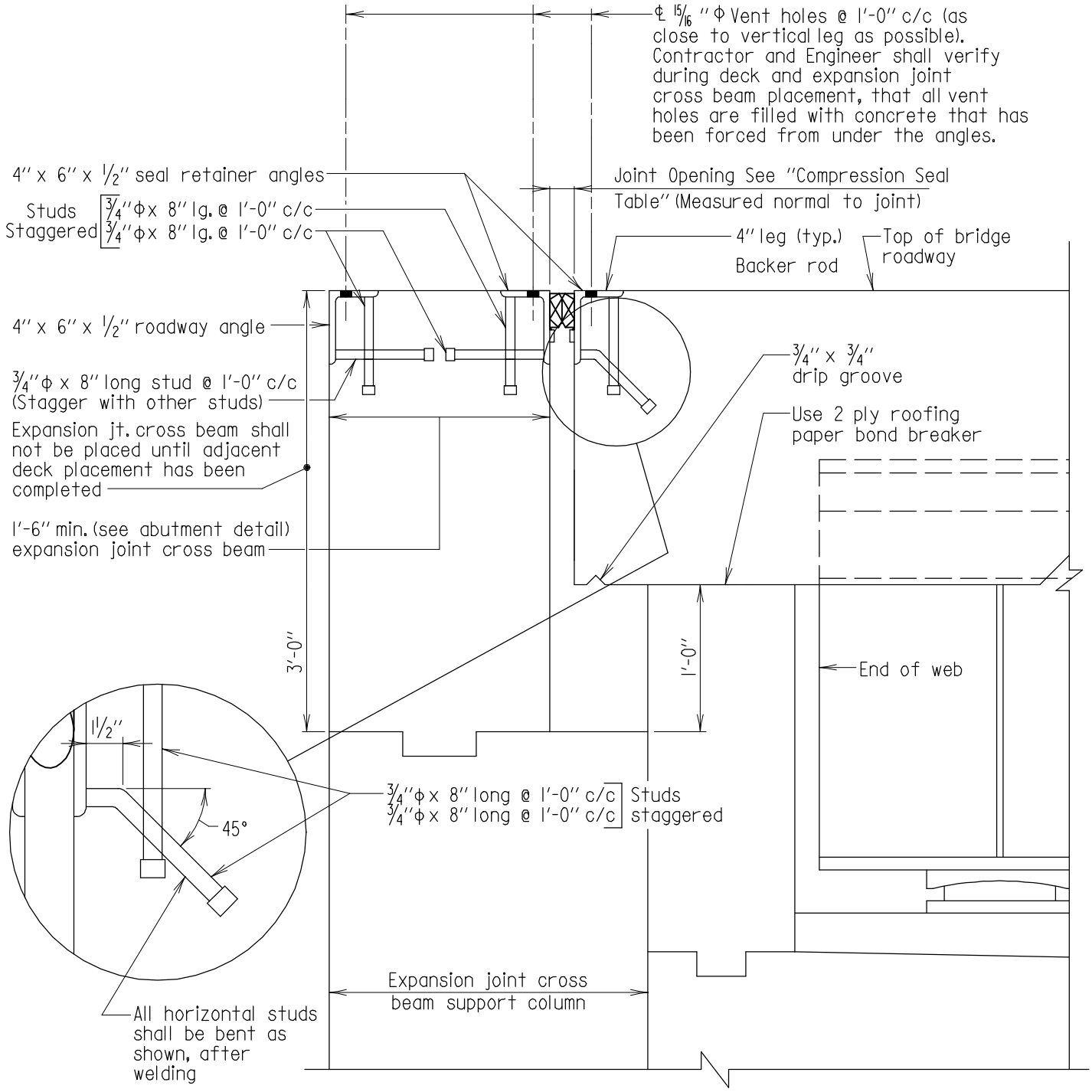

SECTION

Scale: 1" = 1'-0"

Notes:

1. New bridge details shown.
2. See Std. No. SUP-JT(SS)-101 for additional details.
3. Joint area to be thoroughly cleaned in accordance with joint manufacturer's recommendations just prior to placing of seal.

APPROVAL	
C.S. Freedman DIRECTOR OFFICE OF STRUCTURES DATE: 3/7/13	
REVISIONS	
SHA	FHWA

FHWA APPROVAL
DATE:

STATE OF MARYLAND
DEPARTMENT OF TRANSPORTATION
STATE HIGHWAY ADMINISTRATION
OFFICE OF STRUCTURES

ROADWAY JOINTS AT ABUTMENTS CARRYING STEEL GIRDERS WITH STEEL EXPANSION BEARINGS LENGTH CONTRIBUTING TO EXPANSION > 70 FT.

STANDARD NO. SUP-JT(EXP)-101 SHEET 1 OF 1

SUPER-ROADWAY JOINTS

OLD NO. BR-SS(7.21)-13-399

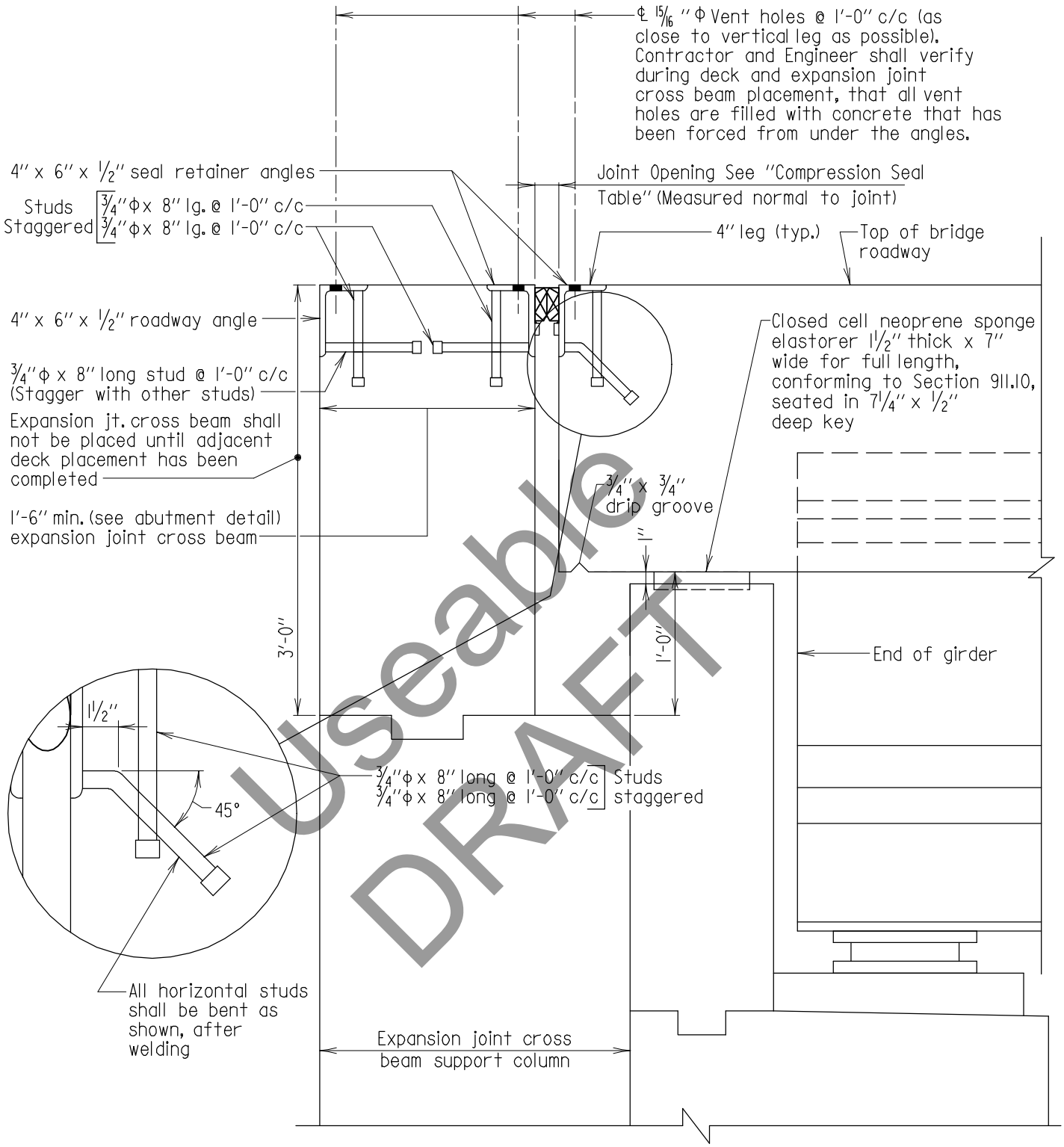

SECTION

Scale: 1" = 1'-0"

Useable DRAFT

* USEABLE DRAFT *

Notes:
1. New bridge details shown.
2. See Std. No. SUP-JT(SS)-101 for additional details.
3. Joint area to be thoroughly cleaned in accordance with joint manufacturer's recommendations just prior to placing of seal.

APPROVAL	
_____ DIRECTOR OFFICE OF STRUCTURES	
DATE: 09/01/15	
REVISIONS	
SHA	FHWA

FHWA APPROVAL
DATE:

STATE OF MARYLAND
DEPARTMENT OF TRANSPORTATION
STATE HIGHWAY ADMINISTRATION
OFFICE OF STRUCTURES

ROADWAY JOINTS AT ABUTMENTS CARRYING PRESTRESSED CONCRETE GIRDERS WITH ELASTOMERIC EXPANSION BEARINGS WITH LENGTH CONTRIBUTING TO EXPANSION > 70 FT.

NO. SUP-JT(EXP)-201 SHEET 1 OF 1

SUPER BRIDGE DECK JOINTS

Note:
Parapet configuration and number of conduit ducts varies - see Typical Section on pertinent bridge plans.

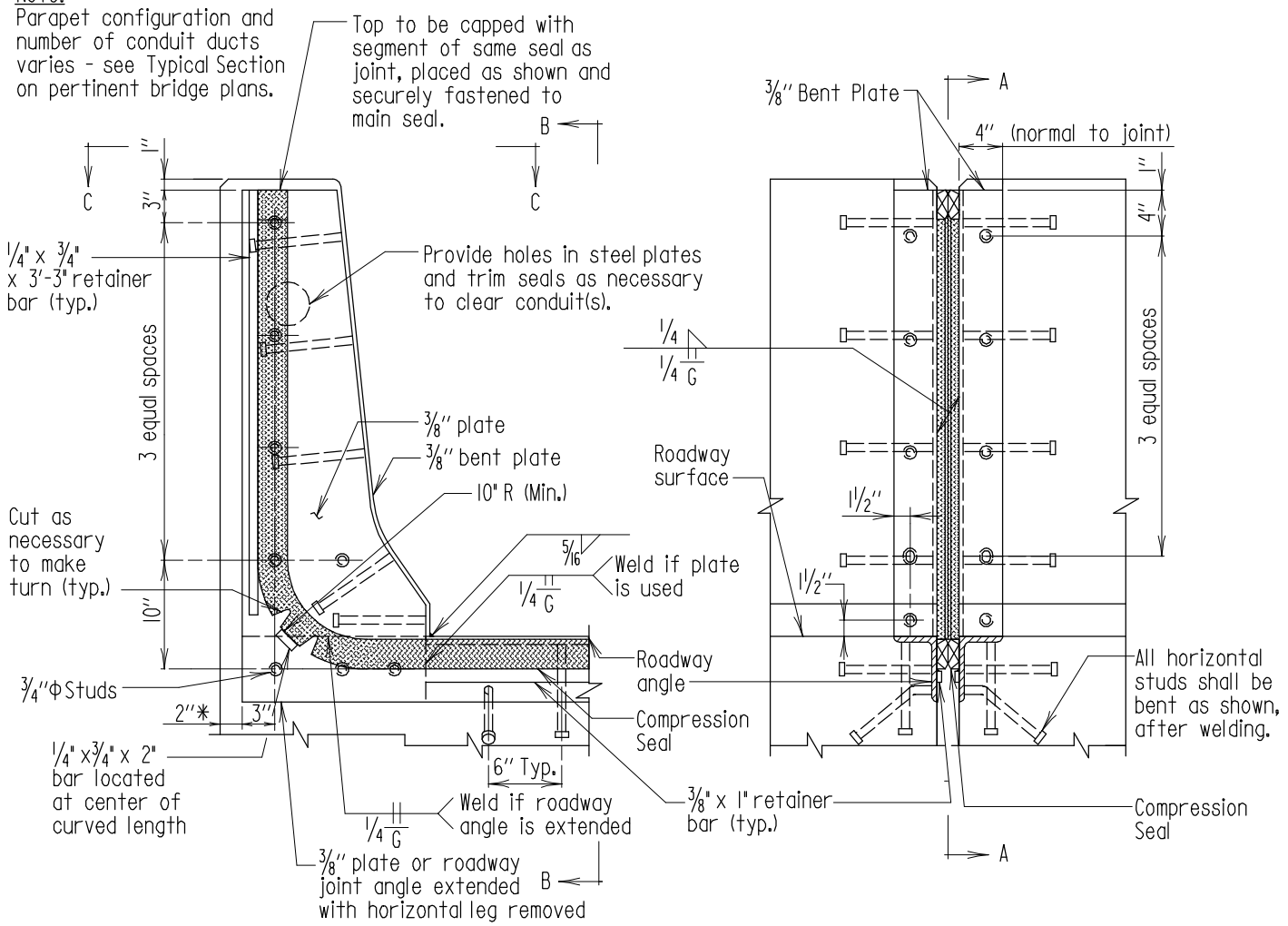

ELEVATION - SECTION A-A
Scale: 3/4" = 1'-0"

VIEW B-B
Scale: 3/4" = 1'-0"

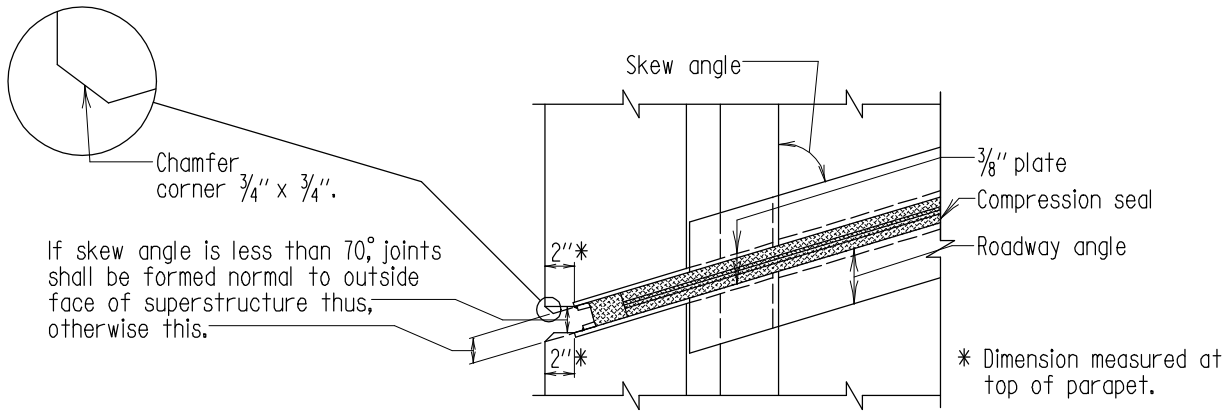

VIEW C-C
Scale: 3/4" = 1'-0"

Note:
1. All studs shall 3/4"Φ-8" long
2. Section A-A & B-B shown 90° skew.
3. Roadway angles and plate to be painted ASTM A 709 Grade 36.
4. Joint area to be thoroughly cleaned in accordance with joint manufacturer's recommendations just prior to placing of seal.

42'' PARAPET

APPROVAL	
E.S. Freedman DIRECTOR OFFICE OF STRUCTURES	
DATE: 3/29/12	
REVISIONS	
SHA	FHWA
FHWA APPROVAL	
DATE:	

STATE OF MARYLAND
DEPARTMENT OF TRANSPORTATION
STATE HIGHWAY ADMINISTRATION
OFFICE OF STRUCTURES

FULL HEIGHT ROADWAY JOINT
FOR 42'' F-SHAPE PARAPET FOR BRIDGES WITH EXPANSION BEARINGS WITH LENGTH CONTRIBUTING TO EXPANSION > 70 FT.

STANDARD NO. SUP-JT(EXP)-301 SHEET 1 OF 1

SUPER - ROADWAY JOINTS

OLD NO. BR-SS(7.08)-03-97B

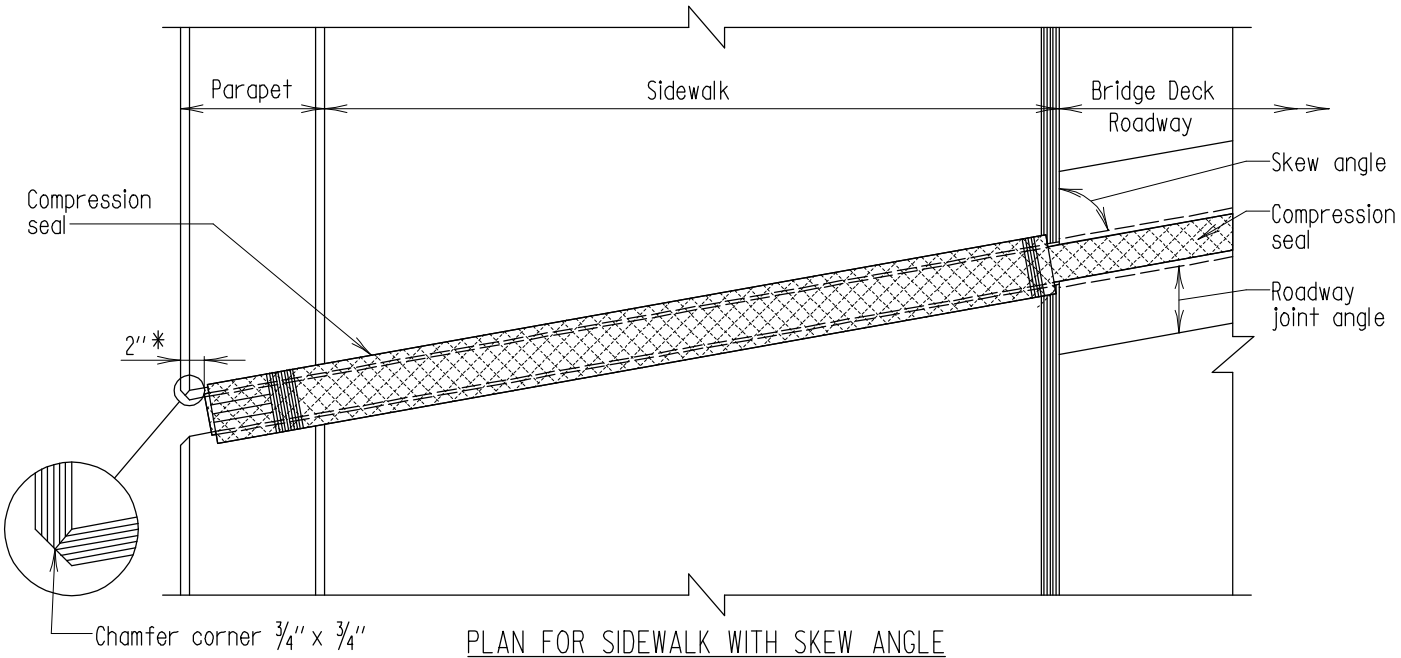

PLAN FOR SIDEWALK WITH SKEW ANGLE
70° OR GREATER
Scale: 3/4" = 1'-0"

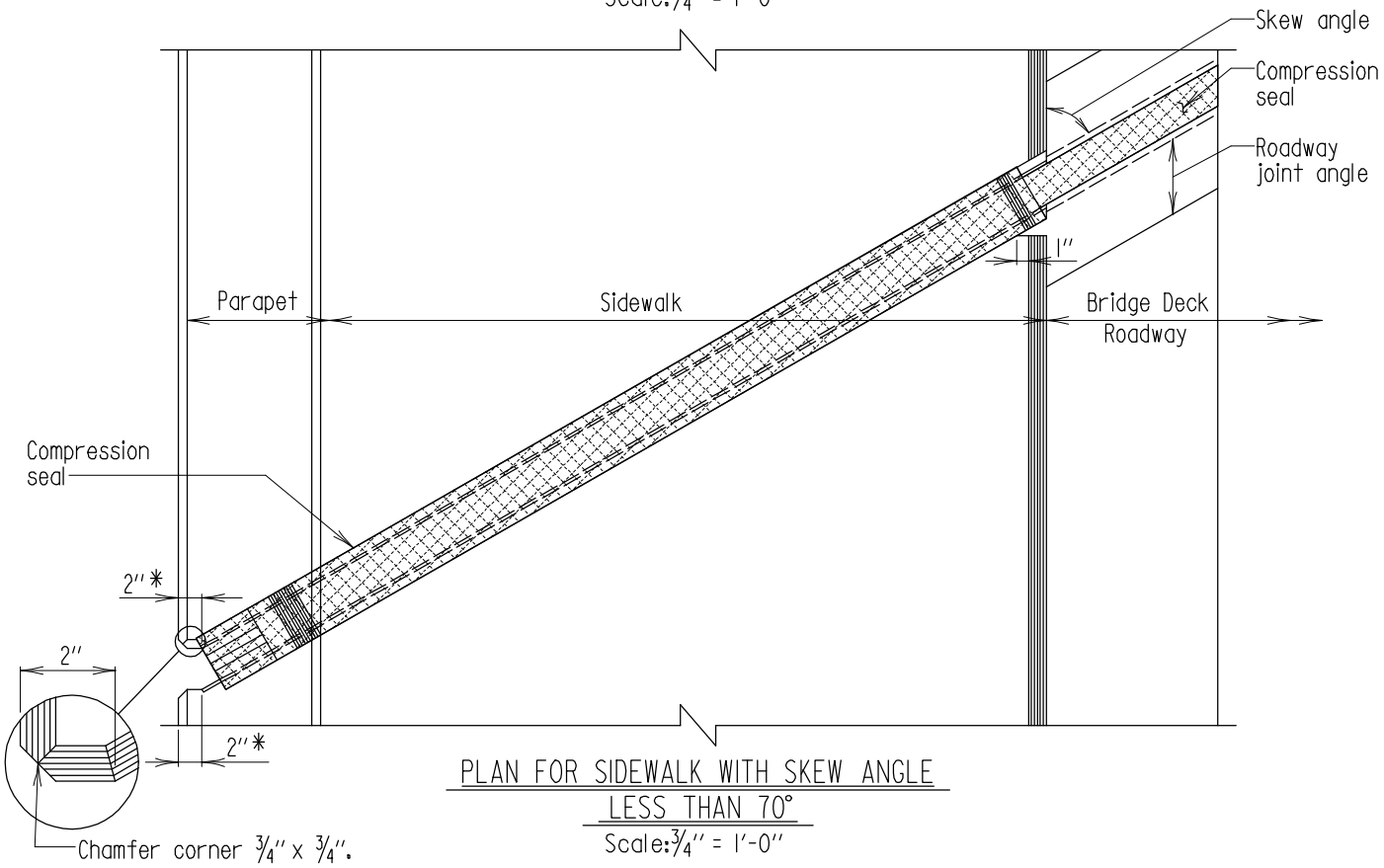

PLAN FOR SIDEWALK WITH SKEW ANGLE
LESS THAN 70°
Scale: 3/4" = 1'-0"

* Dimension measured at top of parapet.

APPROVAL	
E.S. Freedman DIRECTOR OFFICE OF STRUCTURES DATE: 11/15/79	
REVISIONS	
SHA	FHWA
6-20-84	11-8-84
10-30-87	12-1-87
3-29-12	
11-15-13	

FHWA APPROVAL	
DATE: 4-4-80	

STATE OF MARYLAND
DEPARTMENT OF TRANSPORTATION
STATE HIGHWAY ADMINISTRATION
OFFICE OF STRUCTURES

FULL HEIGHT COMPRESSION
SEAL ROADWAY JOINT AT SIDEWALK
FOR BRIDGES WITH EXPANSION BEARINGS WITH
LENGTH CONTRIBUTING TO EXPANSION > 70 FT.

STANDARD NO. SUP-JT(EXP)-401 SHEET 1 OF 2

SUPER-ROADWAY JOINTS

OLD NO. BR-SS(7.07)-79-96

Note:
Sidewalk configuration varies - see Typical Section on pertinent bridge plans.

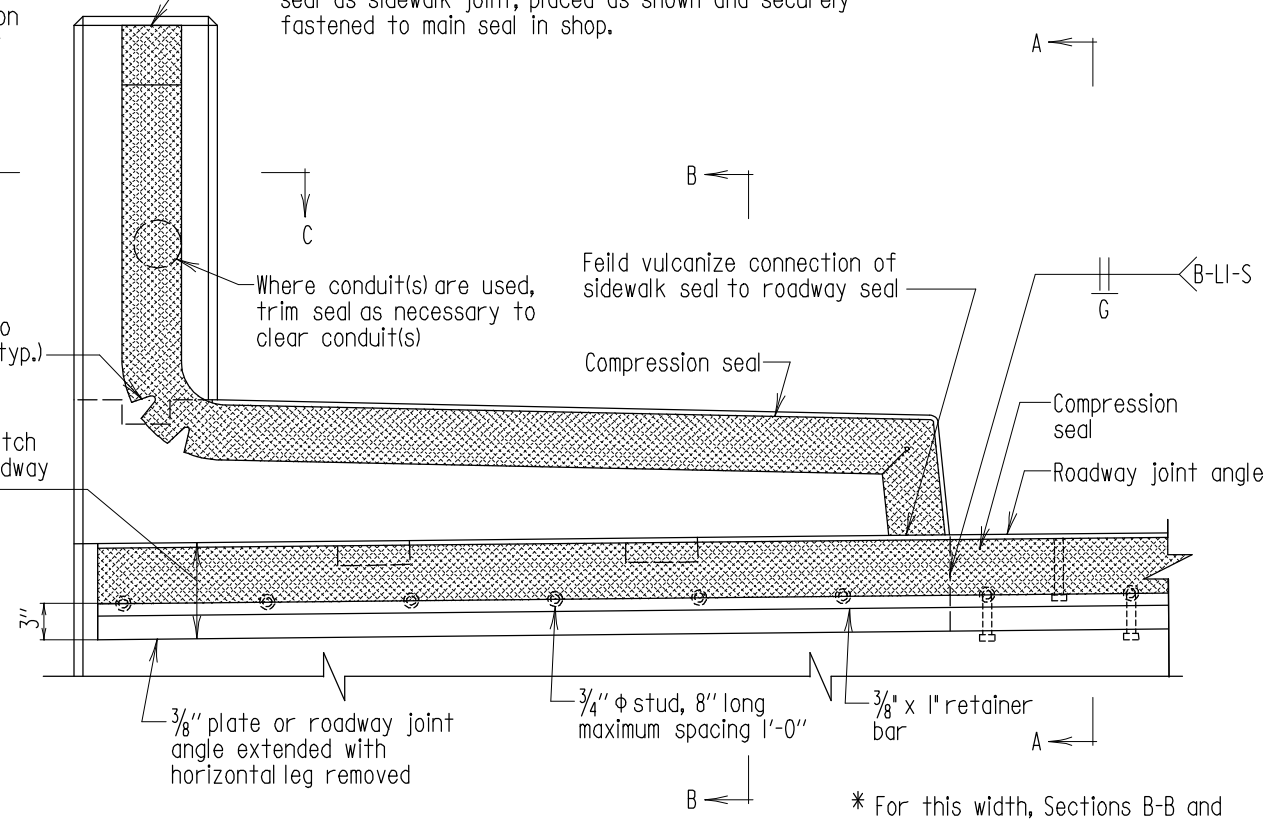

SIDEWALK ELEVATION
Scale: 3/4" = 1'-0"

* For this width, Sections B-B and C-C shall be modified to eliminate the 3/8" lip both sides and provide a 1/4" lip one side of the joint.

Roadway Compression Seal Size	1 1/8"	1 3/4"	3"	5"	6"
Sidewalk Compression Seal Size	1 3/4"	3"	5"	6"	6"*

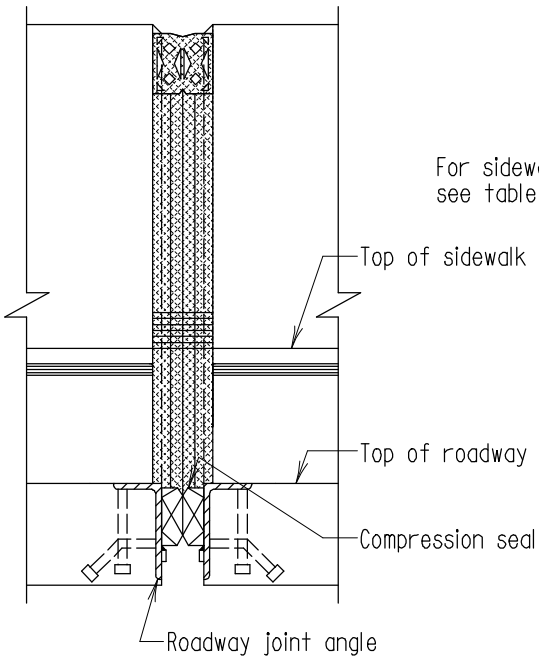

SECTION A-A
Scale: 3/4" = 1'-0"

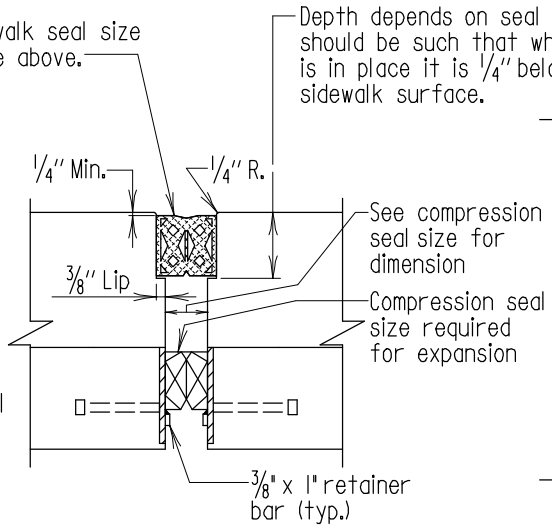

SECTION B-B
Scale: 3/4" = 1'-0"

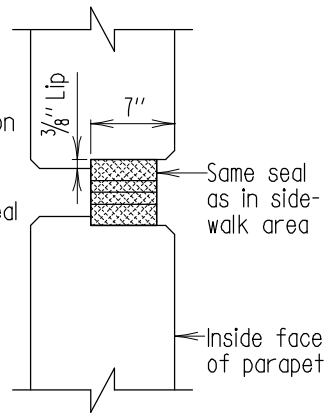

SECTION C-C
Scale: 3/4" = 1'-0"

Note:
1. All sections shown for 90° skew.
2. All steel to be A.S.T.M. A 709, Grade 36 for painting specifications see Section 460.
3. Joint area to be thoroughly cleaned in accordance with joint manufacturer's recommendations just prior to placing of seal.

APPROVAL	
R.S. Freedman DIRECTOR OFFICE OF STRUCTURES	
DATE: 11/15/79	
REVISIONS	
SHA	FHWA
7-24-01	
1-7-02	
3-29-12	
11-15-13	

FHWA APPROVAL	
DATE: 4-4-80	

STATE OF MARYLAND
DEPARTMENT OF TRANSPORTATION
STATE HIGHWAY ADMINISTRATION
OFFICE OF STRUCTURES

FULL HEIGHT COMPRESSION SEAL ROADWAY JOINT AT SIDEWALK FOR BRIDGES WITH EXPANSION BEARINGS WITH LENGTH CONTRIBUTING TO EXPANSION > 70 FT.

STANDARD NO. SUP-JT(EXP)-401 SHEET 2 OF 2

SUPER-ROADWAY JOINTS

OLD NO. BR-SS(7.07)-79-96

SUPERSTRUCTURE

BRIDGE DECK JOINTS

FINGER JOINTS

(SUP-JT(FJ))

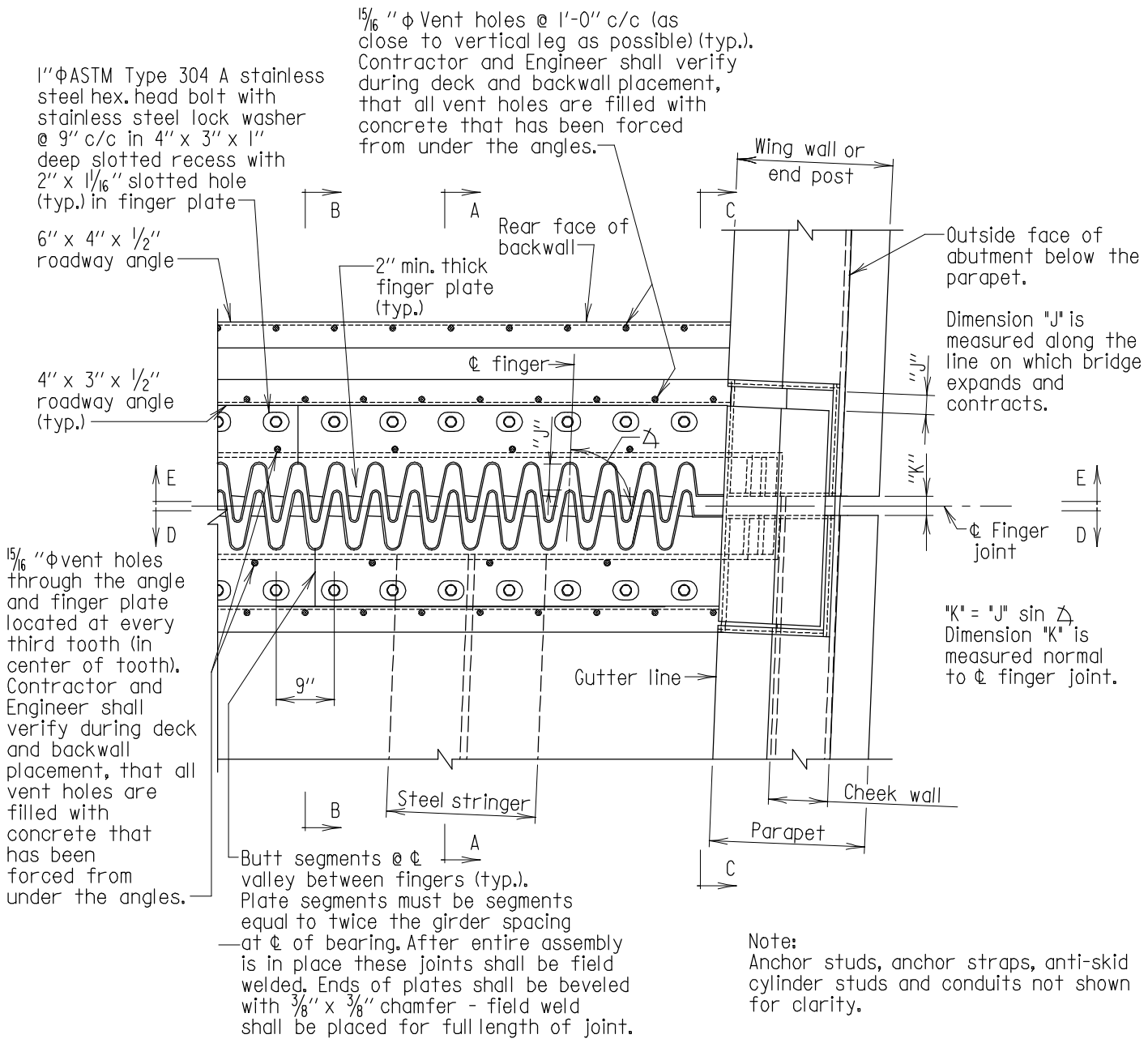

Note:
Anchor studs, anchor straps, anti-skid cylinder studs and conduits not shown for clarity.

PLAN AT ROADWAY LEVEL

Scale: 1/2" = 1'-0"

Note:
℄ finger is parallel to the direction of superstructure movement.

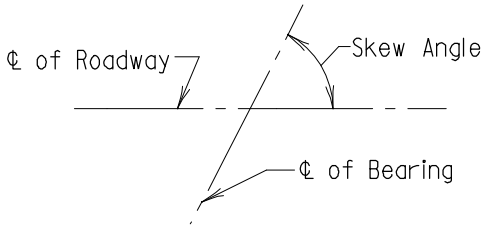

SKEW ANGLE

Scale: None

Notes:
1. For dimensions "J" & "K" and finger plate thickness see Sheet No. 13 of 13.
2. For SECTIONS A-A, B-B, C-C, D-D & E-E see Sheet Nos. 3,4,5,6 & 7 of 13.

APPROVAL	
E.S. Freedman DIRECTOR OFFICE OF STRUCTURES	
DATE: 8/19/04	
REVISIONS	
SHA	FHWA
10-17-05	
7-19-06	
FHWA APPROVAL	
DATE:	

STATE OF MARYLAND
DEPARTMENT OF TRANSPORTATION
STATE HIGHWAY ADMINISTRATION
OFFICE OF STRUCTURES

FINGER JOINT DETAILS (42" F-SHAPE PARAPET)
FOR BRIDGES WITH STEEL STRINGERS
WITH SKEW ANGLES BETWEEN 50° AND 90°

STANDARD NO. SUP-JT(FJ)-101 SHEET 1 OF 13

SUPER-ROADWAY JOINTS

OLD NO. BR-SS(7.18)-04-32IB

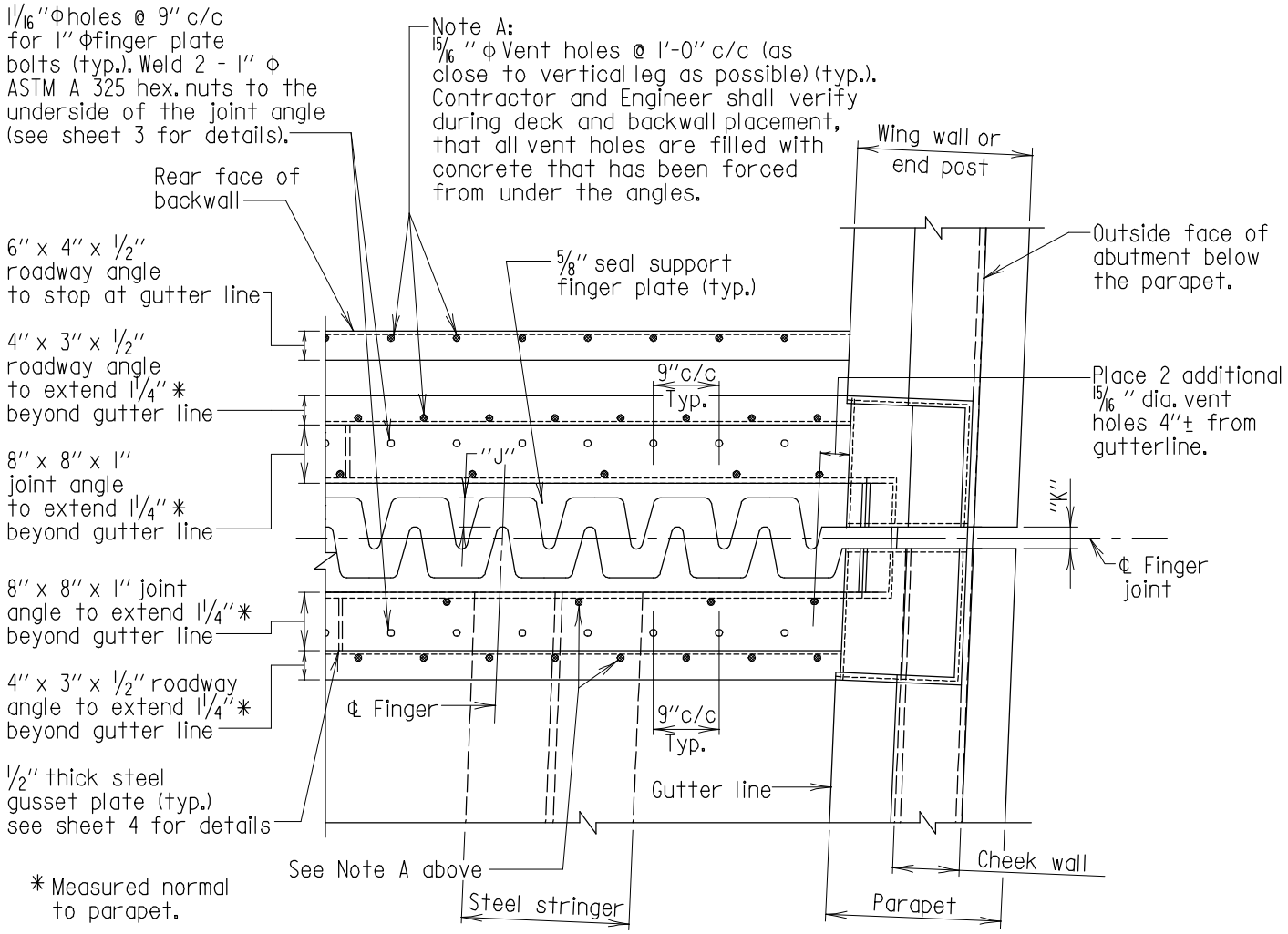

* Measured normal to parapet.

Note:
Anchor studs, anchor straps & conduits not shown for clarity.
℄ finger is parallel to the direction of superstructure movement. Dimension "J" is measured along ℄ finger.

PLAN WITH ROADWAY FINGER PLATES, PARAPET SLIDING PLATE AND FOAM SEAL REMOVED

Scale: 1/2" = 1'-0"

Notes:
1. All details not indicated are the same as Plan at Roadway Level on Sheet No. 1 of 13.
2. For dimensions "J" & "K" see Sheet No. 13 of 13.

APPROVAL	
R.S. Freedman DIRECTOR OFFICE OF STRUCTURES	
DATE: 8/19/04	
REVISIONS	
SHA	FHWA
10-17-05	
7-19-06	
FHWA APPROVAL	
DATE:	

STATE OF MARYLAND
DEPARTMENT OF TRANSPORTATION
STATE HIGHWAY ADMINISTRATION
OFFICE OF STRUCTURES

FINGER JOINT DETAILS (42" F-SHAPE PARAPET)
FOR BRIDGES WITH STEEL STRINGERS
WITH SKEW ANGLES BETWEEN 50° AND 90°

STANDARD NO. SUP-JT(FJ)-101 SHEET 2 OF 13

SUPER-ROADWAY JOINTS

OLD NO. BR-SS(7.18)-04-321B

1" ϕ ASTM Type 304 A stainless steel hex. head bolt with stainless steel lock washer (typ.)

Joint angle 8" x 8" x 1" (typ.)

Finger plate

4" thick foam seal full length (shown hatched) tight to bottom of finger plates.

15/16" ϕ Vent holes @ 1'-0" c/c (as close to vertical leg as possible) (typ.). Contractor and Engineer shall verify during deck and backwall placement, that all vent holes are filled with concrete that has been forced from under the angles.

Roadway angle 4" x 3" x 1/2" 4" leg horizontal (typ.)

Roadway angle 6" x 4" x 1/2" 4" leg horizontal

1'-9" min.

2 1/2"

1 1/2"

3/4" ϕ threaded rods with opposite threads (one at each girder).

3/4" ϕ x 8" long studs @ 9", stagger @ 4 1/2"

1'-6" **

1 1/2" x 1/2" x 12" strap anchors @ 9" c/c stagger with 3/4" ϕ x 8" studs @ 9" c/c

6"

3/4" ϕ x 8" long studs @ 9" c/c

6"

Typ.

3/4" ϕ sleeve nut

3/4" ϕ x 2" stud

3/8

Typ.

Top flange of steel stringer

3/4" ϕ bolt

8" min. x 4" x 3/4" clip angle

"B"

5/8" seal support finger plate

Abutment backwall

Concrete end diaphragm at abutment

℄ of bearing

2 ASTM A 325 hex. nuts

Typ.

Tack weld after tightening

Bolt length shall allow a min. of 1/2" exposure after tightening

* For gusset plate details see sheet 4.

** This portion of backwall to be placed after the adjacent deck concrete has been placed.

SECTION A-A
TYPICAL SECTION AT STRINGERS
Scale: 3/4" = 1'-0"

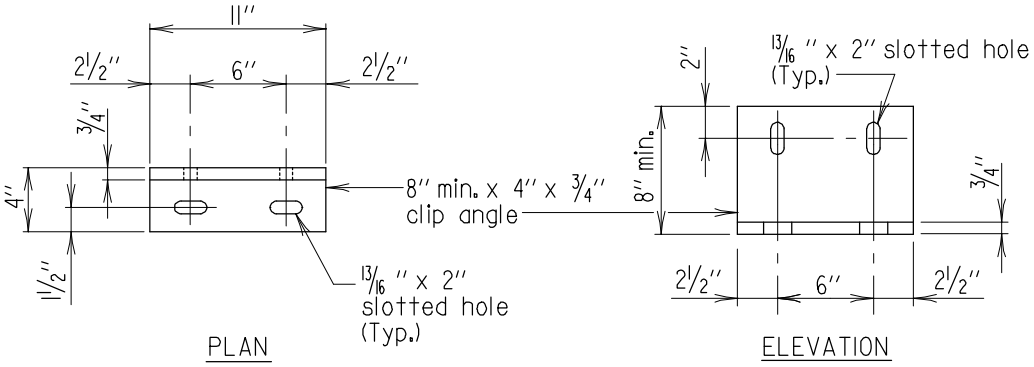

PLAN

ELEVATION

CLIP ANGLE DETAILS
Scale: 1" = 1'-0"

Notes:

1. Finger joint to be fabricated, assembled and shipped to the job site fully assembled.
2. The fully assembled joint shall be installed, bolted and welded into its final position.
3. During concrete deck placement: "CONCRETE MUST APPEAR AT THE TOP OF THE FINGER PLATE INDICATING THAT CONCRETE HAS FILLED THE VOID AREA".
4. For material specifications and requirements, see Special Provisions.
5. For finger plate thickness and dimension "B", see Sheet no. 13 of 13.
6. For details of drainage trough, see Standard No. BR-SS(7.02)-79-64.

APPROVAL	
R.S. Friedman DIRECTOR OFFICE OF STRUCTURES	
DATE: 8/19/04	
REVISIONS	
SHA	FHWA
10-17-05	
7-19-06	
FHWA APPROVAL	
DATE:	

STATE OF MARYLAND
DEPARTMENT OF TRANSPORTATION
STATE HIGHWAY ADMINISTRATION
OFFICE OF STRUCTURES

FINGER JOINT DETAILS (42" F-SHAPE PARAPET) FOR BRIDGES WITH STEEL STRINGERS WITH SKEW ANGLES BETWEEN 50° AND 90°

STANDARD NO. SUP-JT(FJ)-101 SHEET 3 OF 13

SUPER-ROADWAY JOINTS

OLD NO. BR-SS(7.18)-04-32IB

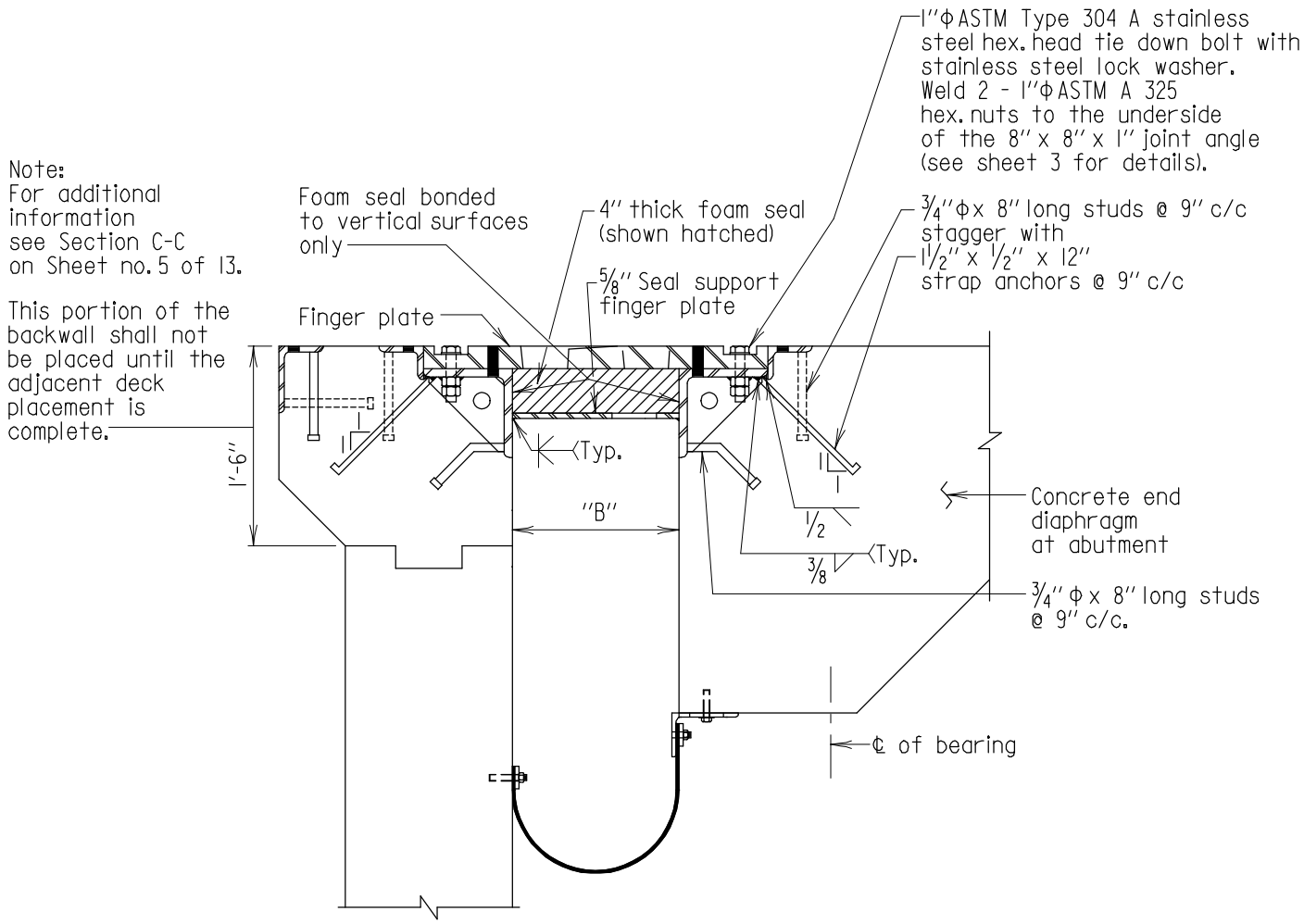

SECTION B-B
TYPICAL SECTION BETWEEN STRINGERS
Scale: 3/4" = 1'-0"

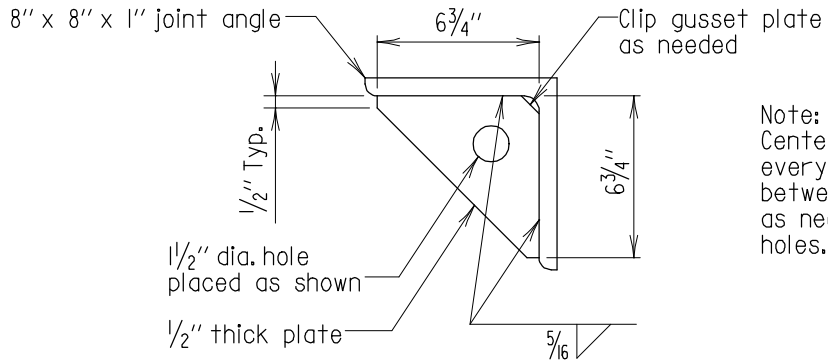

Note:
Center gusset plate between every other tie down bolt between girders. Move plate as necessary to clear vent holes.

GUSSET PLATE DETAILS
Scale: 1 1/2" = 1'-0"

Notes:
1. For finger plate thickness and dimension "B", see Sht. No. 13 of 13.
2. For details of drainage trough, see Standard No. BR-SS(7.02)-79-64.
3. For details not shown see Sheet. no. 3 of 13.

APPROVAL	
R.S. Freedman DIRECTOR OFFICE OF STRUCTURES	
DATE: 8/19/04	
REVISIONS	
SHA	FHWA
10-17-05	
FHWA APPROVAL	
DATE:	

STATE OF MARYLAND
DEPARTMENT OF TRANSPORTATION
STATE HIGHWAY ADMINISTRATION
OFFICE OF STRUCTURES

FINGER JOINT DETAILS (42" F-SHAPE PARAPET)
FOR BRIDGES WITH STEEL STRINGERS
WITH SKEW ANGLES BETWEEN 50° AND 90°

STANDARD NO. SUP-JT(FJ)-101 **SHEET** 4 **OF** 13

SUPER-ROADWAY JOINTS

OLD NO. BR-SS(7.18)-04-32IB

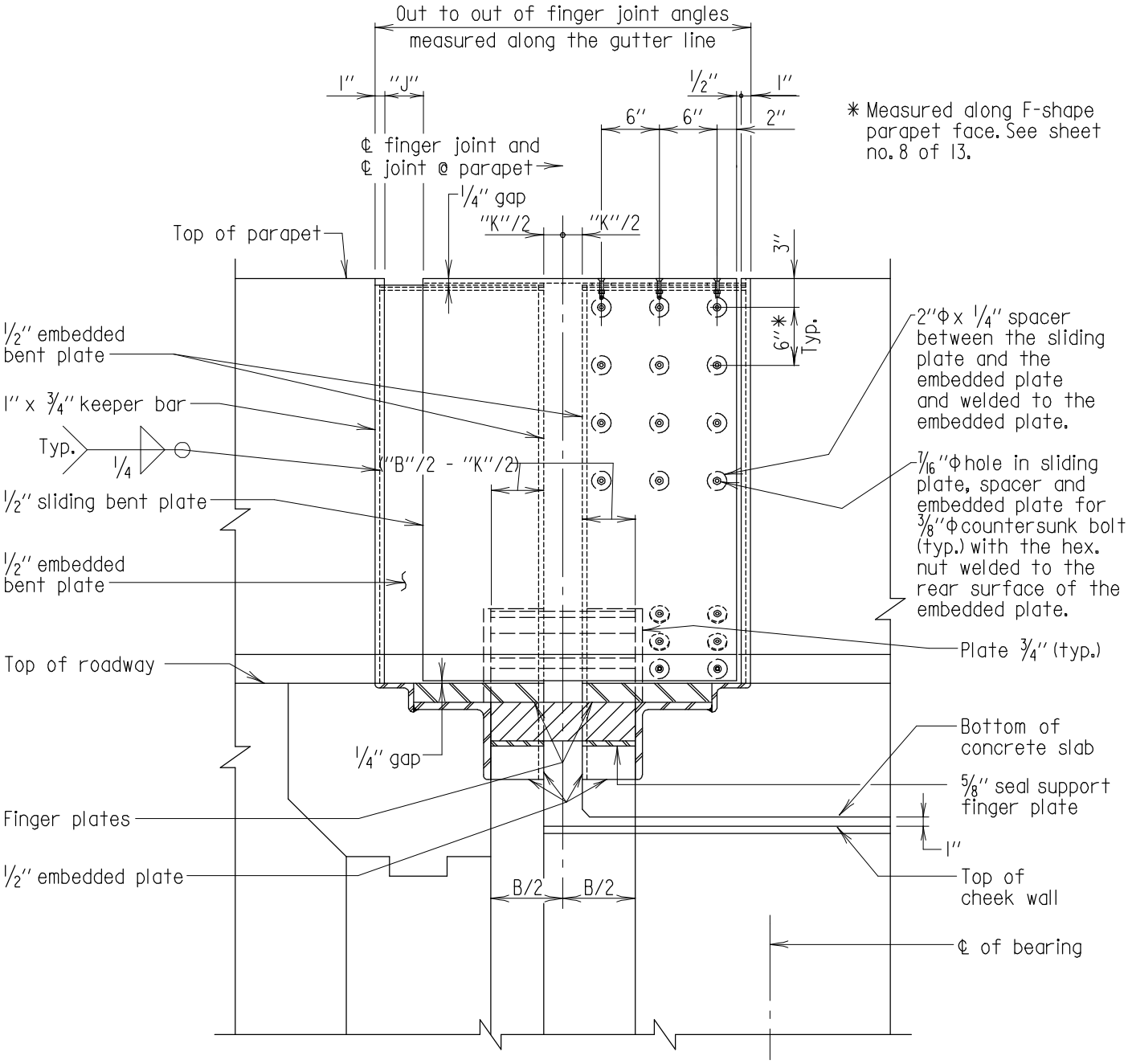

* Measured along F-shape parapet face. See sheet no. 8 of 13.

SECTION C-C

Scale: 3/4" = 1'-0"

Note:
For dimensions "B", "K", & "J" see Sheet No. 13 of 13.

APPROVAL		
E.S. Friedman DIRECTOR OFFICE OF STRUCTURES DATE: 8/19/04		
REVISIONS		
SHA	FHWA	
FHWA APPROVAL		
DATE:		

STATE OF MARYLAND
DEPARTMENT OF TRANSPORTATION
STATE HIGHWAY ADMINISTRATION
OFFICE OF STRUCTURES

FINGER JOINT DETAILS (42" F-SHAPE PARAPET)
FOR BRIDGES WITH STEEL STRINGERS
WITH SKEW ANGLES BETWEEN 50° AND 90°

STANDARD NO. SUP-JT(FJ)-101 SHEET 5 OF 13

SUPER-ROADWAY JOINTS

OLD NO. BR-SS(7.18)-04-32IB

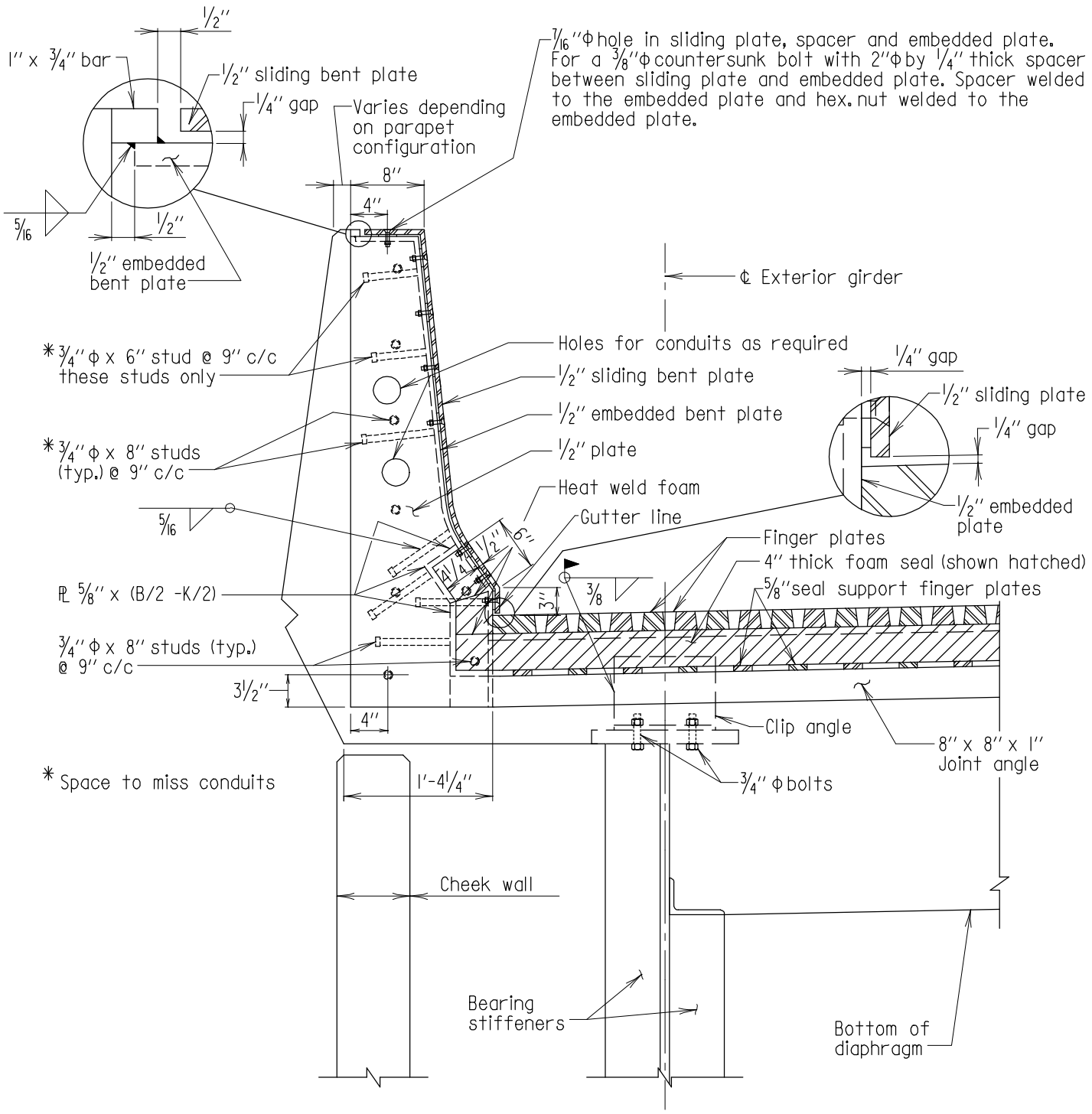

Note:
Drainage trough not shown for clarity.

SECTION D-D

Scale: 3/4" = 1'-0"

Notes:
1. For parapet dimensions see BR-SS(6.25)-84-159B.
2. Diamond back parapet shown, for exact configuration see Typical Section.

APPROVAL	
R.S. Freedman DIRECTOR OFFICE OF STRUCTURES DATE: 8/19/04	
REVISIONS	
SHA	FHWA
10-17-05	
FHWA APPROVAL	
DATE:	

STATE OF MARYLAND
DEPARTMENT OF TRANSPORTATION
STATE HIGHWAY ADMINISTRATION
OFFICE OF STRUCTURES

FINGER JOINT DETAILS (42" F-SHAPE PARAPET)
FOR BRIDGES WITH STEEL STRINGERS
WITH SKEW ANGLES BETWEEN 50° AND 90°

STANDARD NO. SUP-JT(FJ)-101 SHEET 6 OF 13

SUPER-ROADWAY JOINTS

OLD NO. BR-SS(7.18)-04-32IB

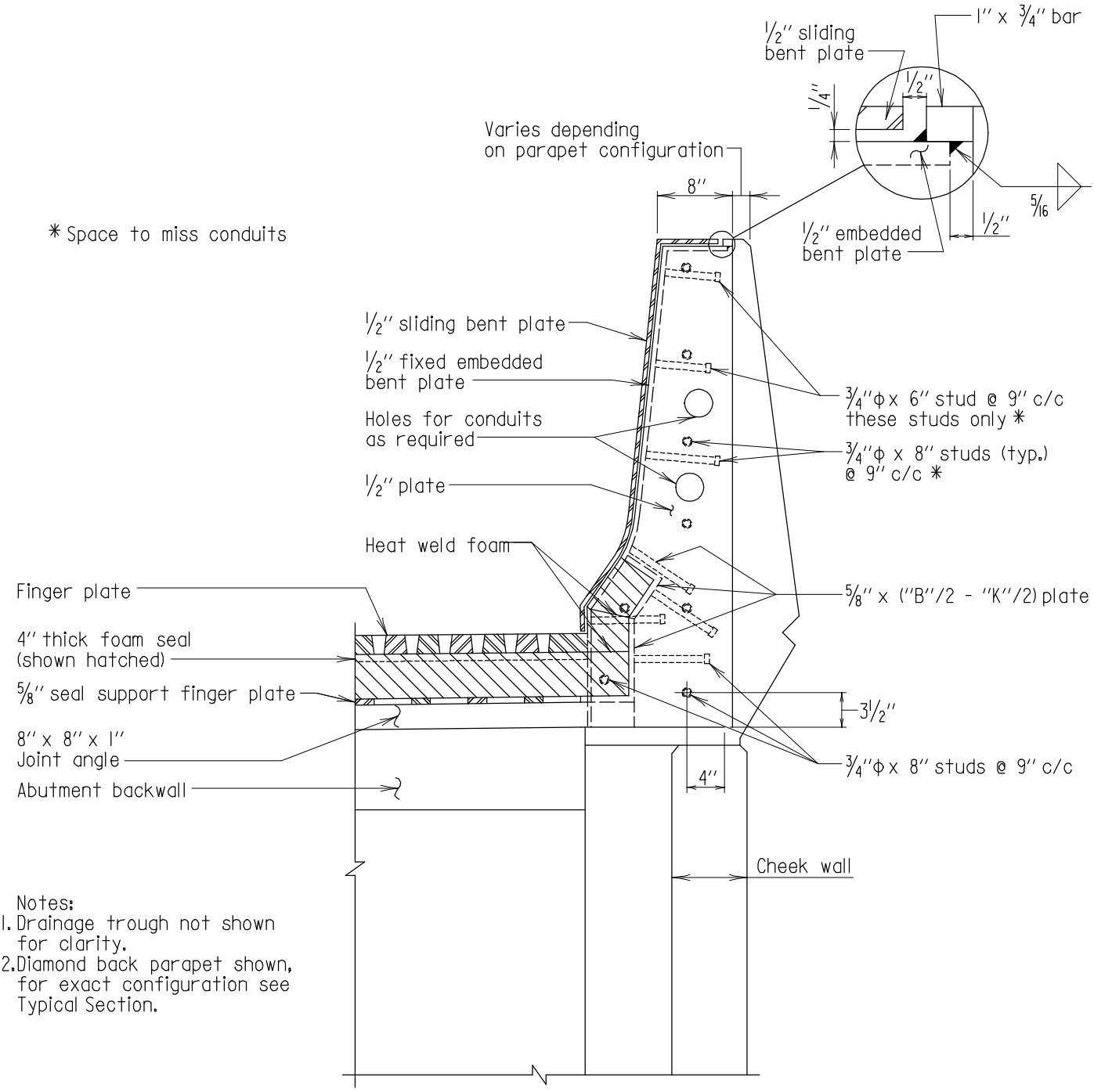

Notes:
1. Drainage trough not shown for clarity.
2. Diamond back parapet shown, for exact configuration see Typical Section.

SECTION E-E

Scale: 3/4" = 1'-0"

APPROVAL		
R.S. Freedman DIRECTOR OFFICE OF STRUCTURES DATE: 8/19/04		
REVISIONS		
SHA	FHWA	
10-17-05		
FHWA APPROVAL		
DATE:		

STATE OF MARYLAND
DEPARTMENT OF TRANSPORTATION
STATE HIGHWAY ADMINISTRATION
OFFICE OF STRUCTURES

FINGER JOINT DETAILS (42" F-SHAPE PARAPET)
FOR BRIDGES WITH STEEL STRINGERS
WITH SKEW ANGLES BETWEEN 50° AND 90°

STANDARD NO. SUP-JT(FJ)-101 SHEET 7 OF 13

SUPER-ROADWAY JOINTS

OLD NO. BR-SS(7.18)-04-321B

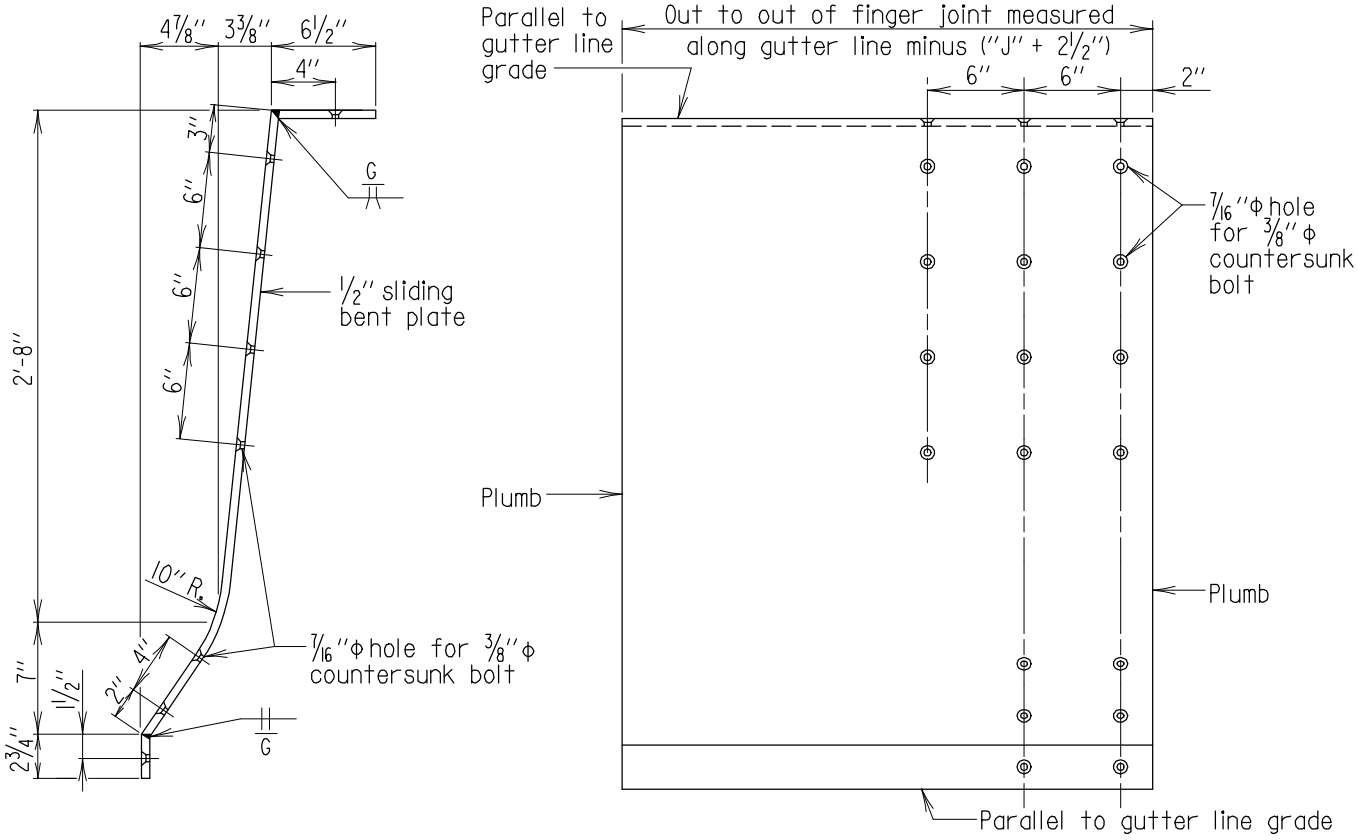

END VIEW

FRONT VIEW

SLIDING PLATE

Scale: 1" = 1'-0"

APPROVAL	
R.S. Freedman DIRECTOR OFFICE OF STRUCTURES DATE: 8/19/04	
REVISIONS	
SHA	FHWA
FHWA APPROVAL	
DATE:	

STATE OF MARYLAND
DEPARTMENT OF TRANSPORTATION
STATE HIGHWAY ADMINISTRATION
OFFICE OF STRUCTURES

FINGER JOINT DETAILS (42" F-SHAPE PARAPET)
FOR BRIDGES WITH STEEL STRINGERS
WITH SKEW ANGLES BETWEEN 50° AND 90°

STANDARD NO. SUP-JT(FJ)-101

SHEET 8 OF 13

SUPER-ROADWAY JOINTS

OLD NO. BR-SS(7.18)-04-32IB

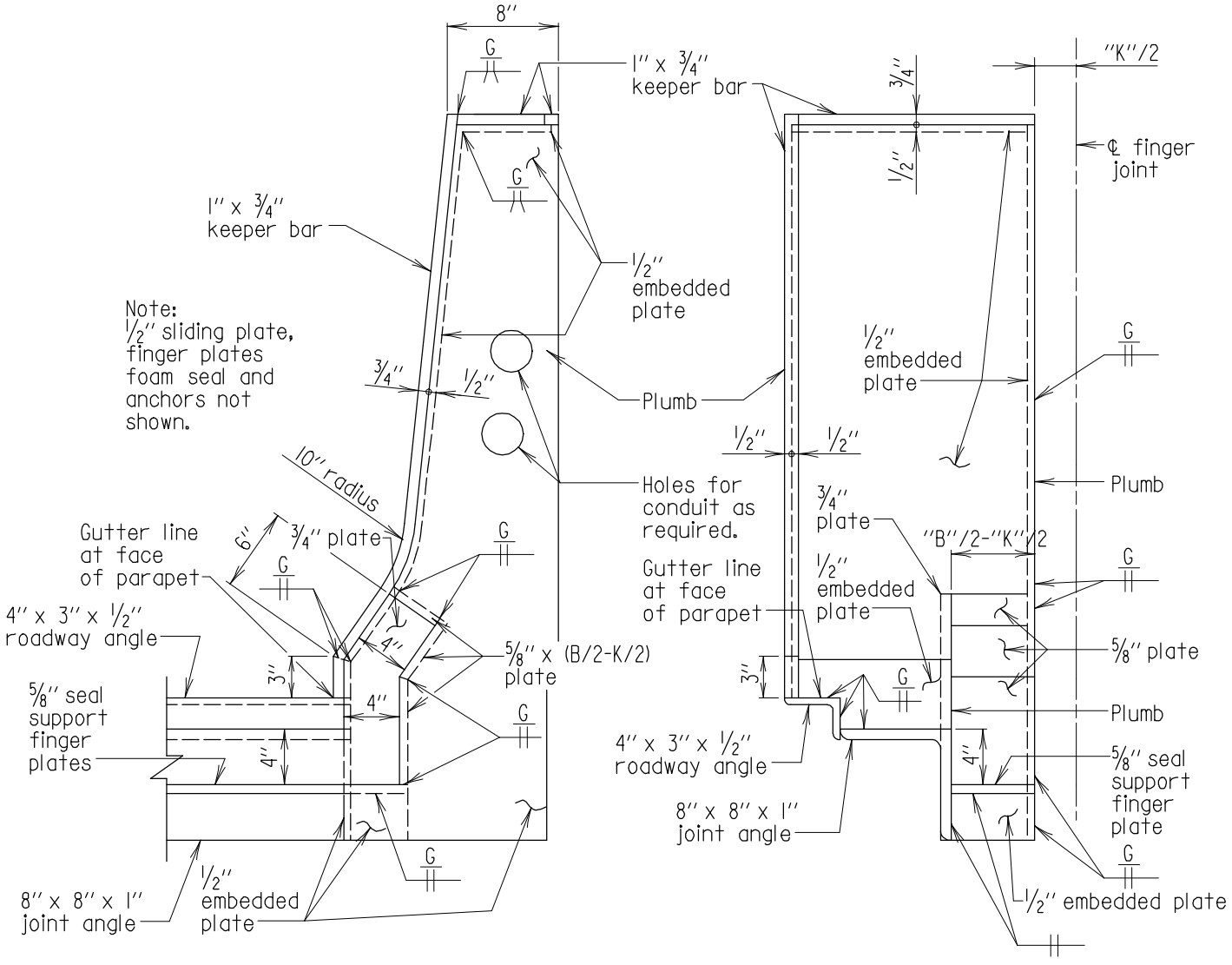

END VIEW FROM ℄ FINGER JOINT

FRONT VIEW

EMBEDDED PLATE - EXPANSION END

Scale: 1" = 1'-0"

APPROVAL	
R.S. Freedman DIRECTOR OFFICE OF STRUCTURES	
DATE: 8/19/04	
REVISIONS	
SHA	FHWA
10-17-05	
FHWA APPROVAL	
DATE:	

STATE OF MARYLAND
DEPARTMENT OF TRANSPORTATION
STATE HIGHWAY ADMINISTRATION
OFFICE OF STRUCTURES

FINGER JOINT DETAILS (42" F-SHAPE PARAPET)
FOR BRIDGES WITH STEEL STRINGERS
WITH SKEW ANGLES BETWEEN 50° AND 90°

STANDARD NO. SUP-JT(FJ)-101 SHEET 9 OF 13

SUPER-ROADWAY JOINTS

OLD NO. BR-SS(7.18)-04-32IB

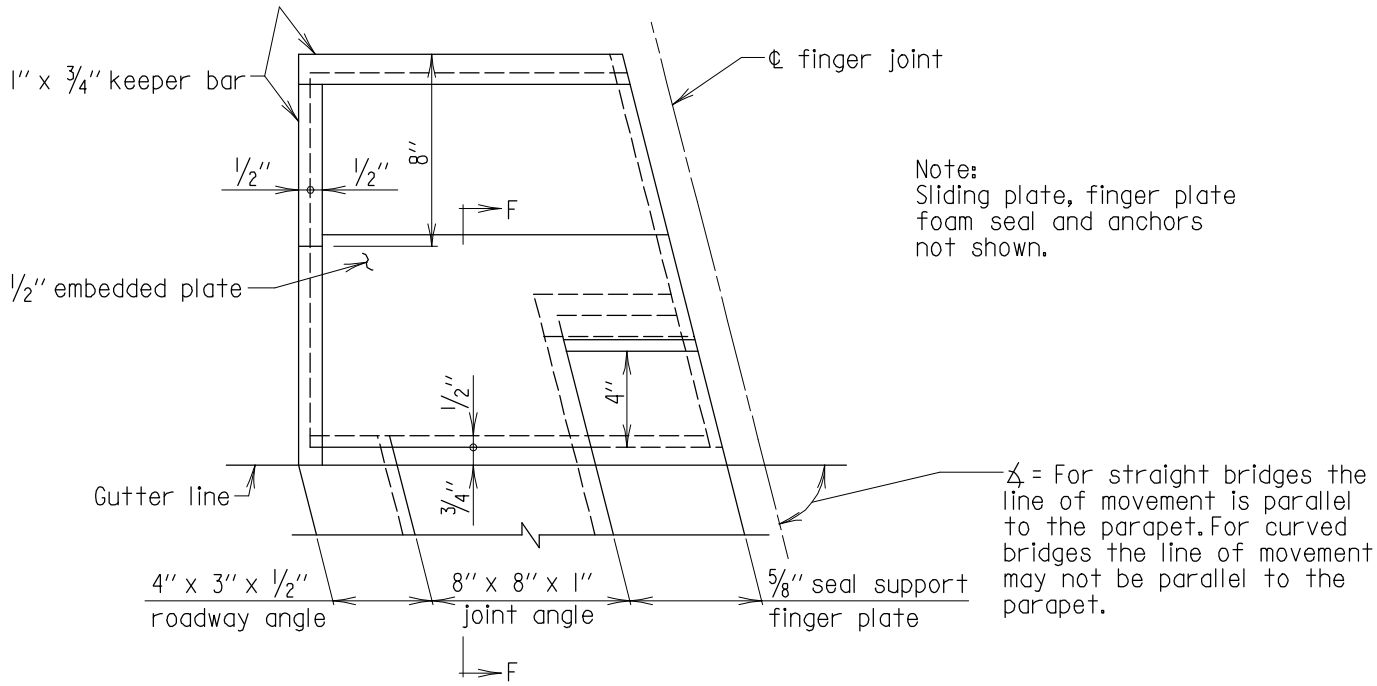

TOP VIEW
EMBEDDED PLATE - EXPANSION END
Scale: 1 1/2" = 1'-0"

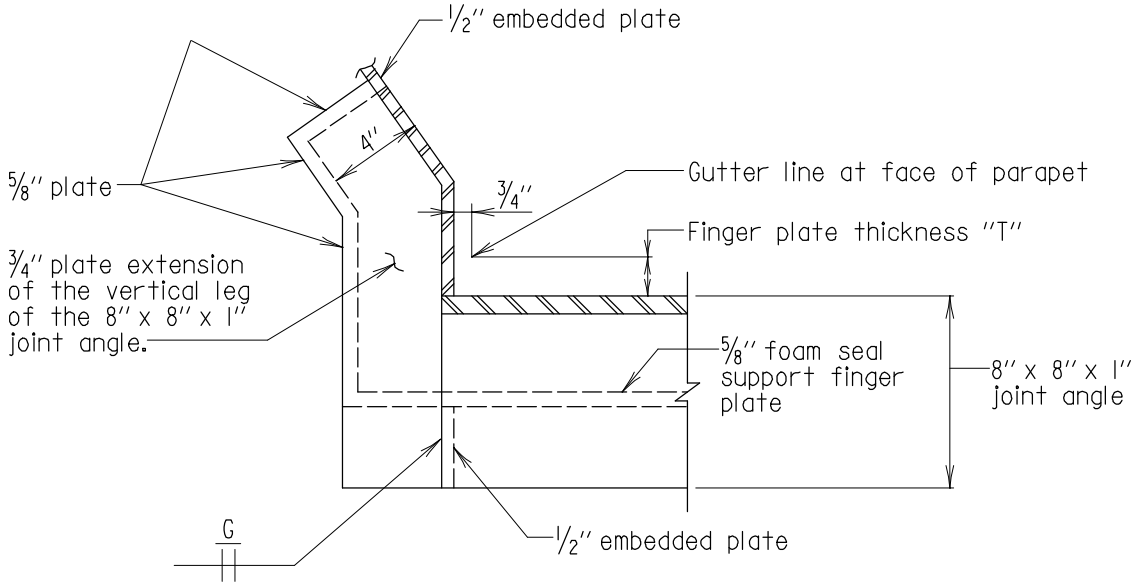

SECTION F-F
Scale: 1 1/2" = 1'-0"

APPROVAL		
E.S. Freedman DIRECTOR OFFICE OF STRUCTURES DATE: 8/19/04		
REVISIONS		
SHA	FHWA	
10-17-05		
FHWA APPROVAL		
DATE:		

STATE OF MARYLAND
DEPARTMENT OF TRANSPORTATION
STATE HIGHWAY ADMINISTRATION
OFFICE OF STRUCTURES

FINGER JOINT DETAILS (42" F-SHAPE PARAPET)
FOR BRIDGES WITH STEEL STRINGERS
WITH SKEW ANGLES BETWEEN 50° AND 90°

STANDARD NO. SUP-JT(FJ)-101 SHEET 10 OF 13

SUPER-ROADWAY JOINTS

OLD NO. BR-SS(7.18)-04-32IB

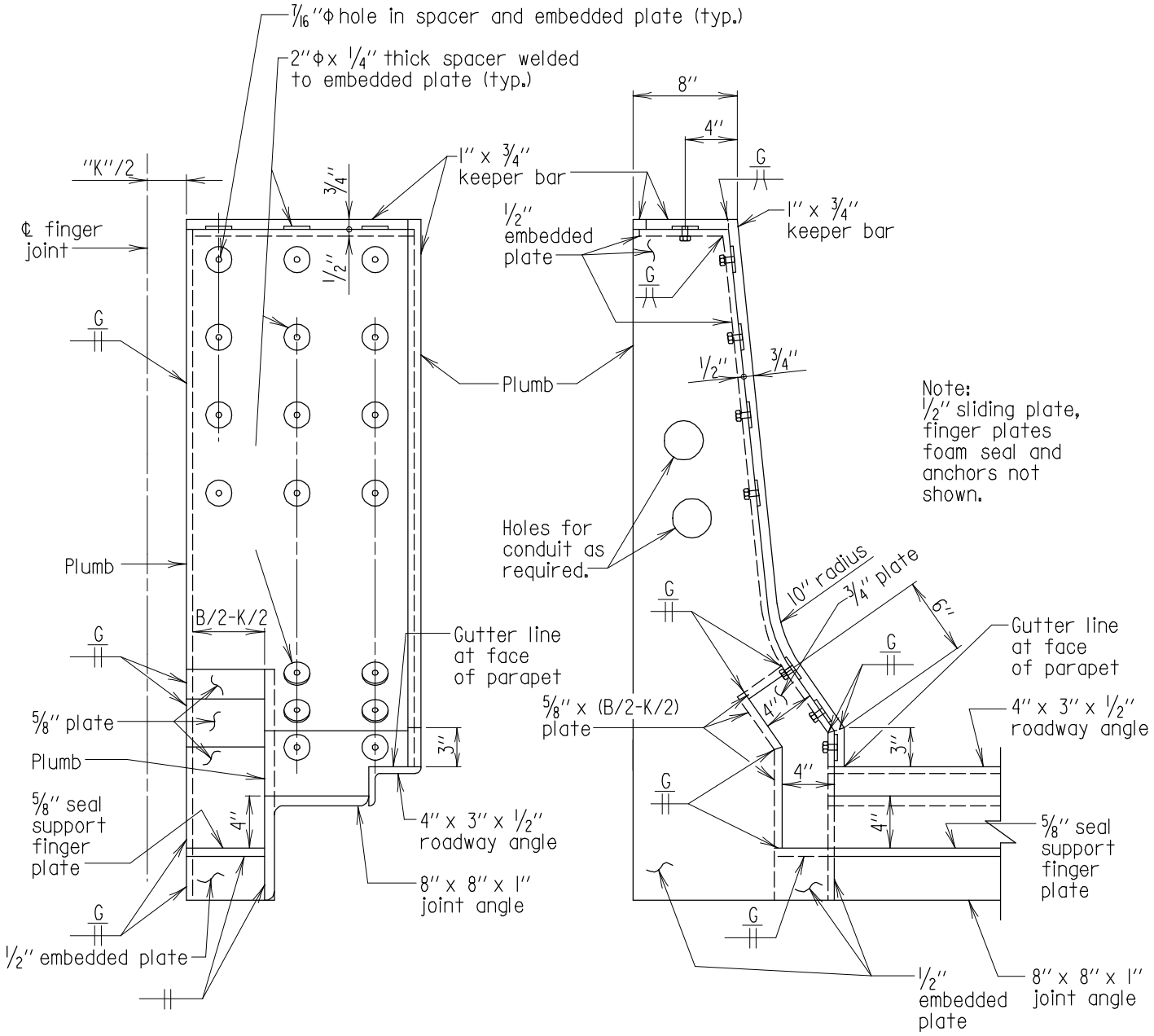

FRONT VIEW

END VIEW FROM ℄ FINGER JOINT

EMBEDDED PLATE - FIXED END

Scale: 1" = 1'-0"

APPROVAL	
R.S. Freedman DIRECTOR OFFICE OF STRUCTURES	
DATE: 8/19/04	
REVISIONS	
SHA	FHWA
10-17-05	
FHWA APPROVAL	
DATE:	

STATE OF MARYLAND
DEPARTMENT OF TRANSPORTATION
STATE HIGHWAY ADMINISTRATION
OFFICE OF STRUCTURES

FINGER JOINT DETAILS (42" F-SHAPE PARAPET)
FOR BRIDGES WITH STEEL STRINGERS
WITH SKEW ANGLES BETWEEN 50° AND 90°

STANDARD NO. SUP-JT(FJ)-101 SHEET 11 OF 13

SUPER-ROADWAY JOINTS

OLD NO. BR-SS(7.18)-04-32IB

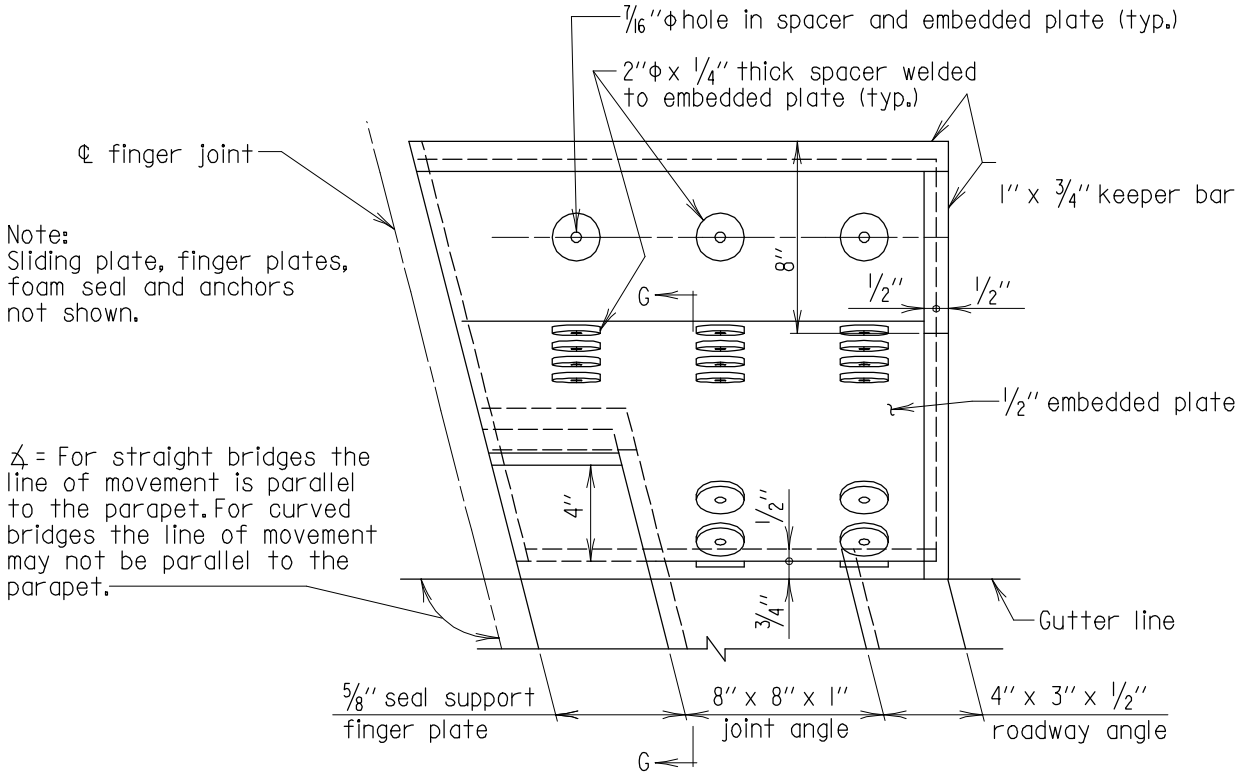

TOP VIEW
EMBEDDED PLATE - FIXED END
Scale: 1 1/2" = 1'-0"

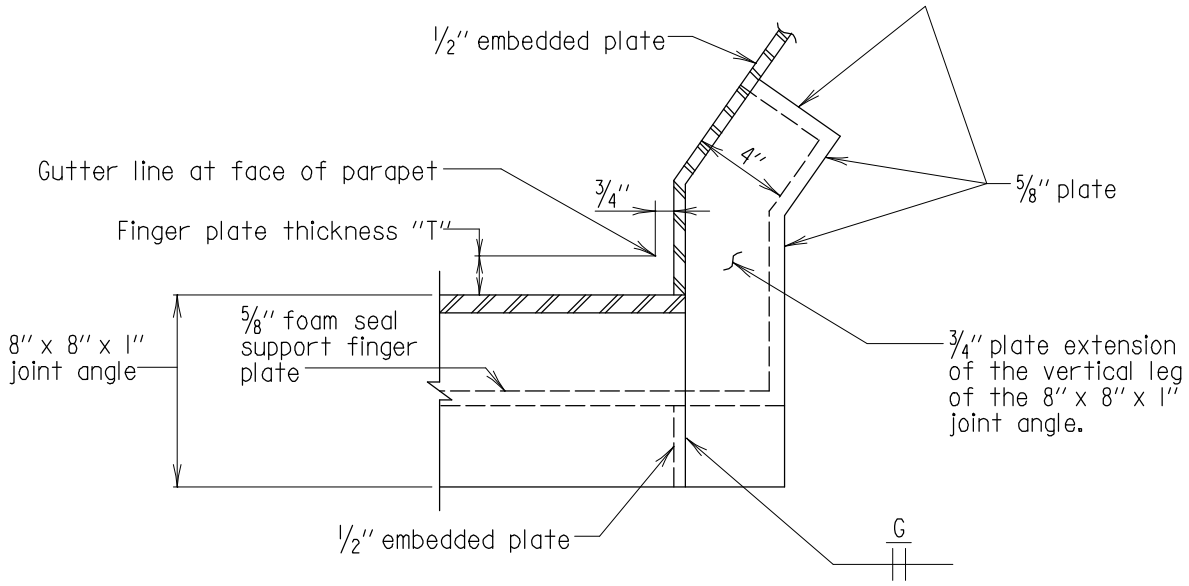

SECTION G-G
Scale: 1 1/2" = 1'-0"

APPROVAL	
R.S. Freedman DIRECTOR OFFICE OF STRUCTURES DATE: 8/19/04	
REVISIONS	
SHA	FHWA
10-17-05	
FHWA APPROVAL	
DATE:	

STATE OF MARYLAND
DEPARTMENT OF TRANSPORTATION
STATE HIGHWAY ADMINISTRATION
OFFICE OF STRUCTURES

FINGER JOINT DETAILS (42" F-SHAPE PARAPET)
FOR BRIDGES WITH STEEL STRINGERS
WITH SKEW ANGLES BETWEEN 50° AND 90°

STANDARD NO. SUP-JT(FJ)-101 SHEET 12 OF 13

SUPER-ROADWAY JOINTS

OLD NO. BR-SS(7.18)-04-32IB

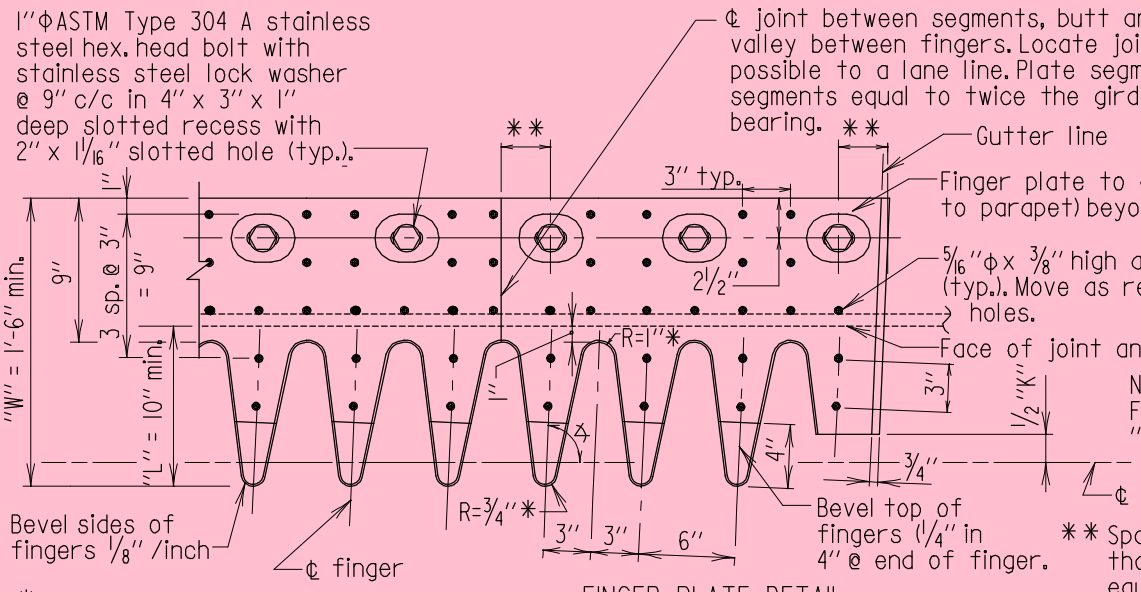

FINGER PLATE DETAIL

Scale: 1" = 1'-0"

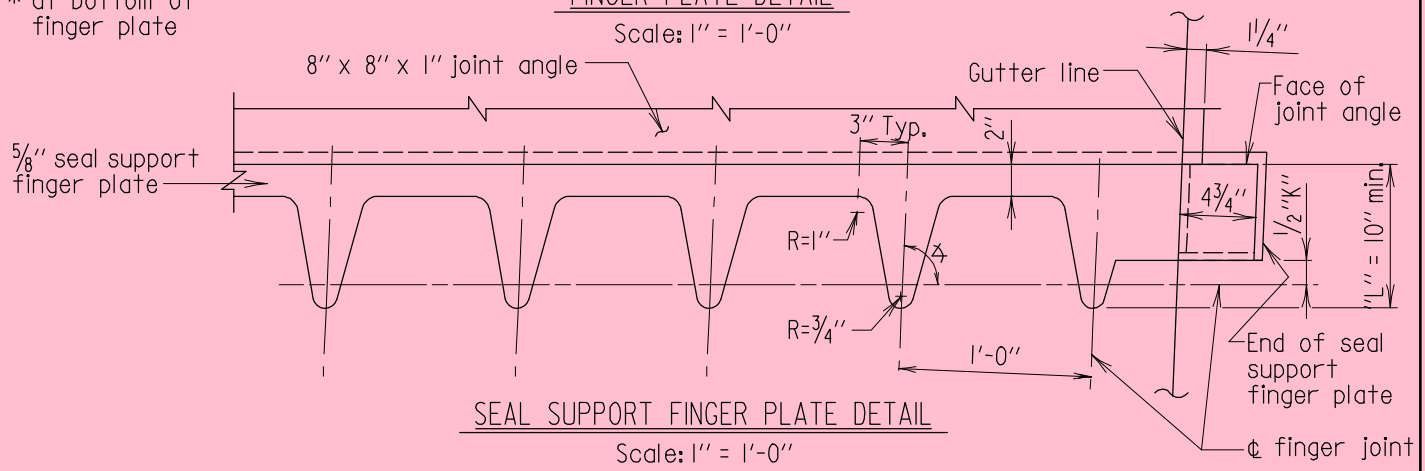

SEAL SUPPORT FINGER PLATE DETAIL

Scale: 1" = 1'-0"

JOINT OPENING TABLE (INCHES)							
LOCATION OF JOINT		JOINT OPENING AT					
		40° F.	50° F.	60° F.	70° F.	80° F.	90° F.
	J						
	K						
	B						

"J" = Finger plate opening along ℄ of finger (See Sheet No. 1 of 13)

"K" = Finger plate opening normal to ℄ of joint (See Sheet No. 1 of 13)

"B" = Joint opening between joint angles normal to ℄ of joint (See Sheet No. 3 of 13)

"∡" = Skew Angle of straight bridges, angle along which the bridge expands, and contracts for curved bridges.

"T" = _____

"L" = _____

"W" = _____

"∡" = _____

APPROVAL	
C.S. Freedman DIRECTOR OFFICE OF STRUCTURES	
DATE: 8/19/04	
REVISIONS	
SHA	FHWA
10-17-05	
FHWA APPROVAL	
DATE:	

STATE OF MARYLAND
DEPARTMENT OF TRANSPORTATION
STATE HIGHWAY ADMINISTRATION
OFFICE OF STRUCTURES

FINGER JOINT DETAILS (42" F-SHAPE PARAPET)
FOR BRIDGES WITH STEEL STRINGERS
WITH SKEW ANGLES BETWEEN 50° AND 90°

STANDARD NO. SUP-JT(FJ)-101 SHEET 13 OF 13

SUPER-ROADWAY JOINTS

OLD NO. BR-SS(7.18)-04-32IB

SUPERSTRUCTURE

BRIDGE DECK JOINTS

MODIFIED JOINTS

(SUP-JT(MOD))

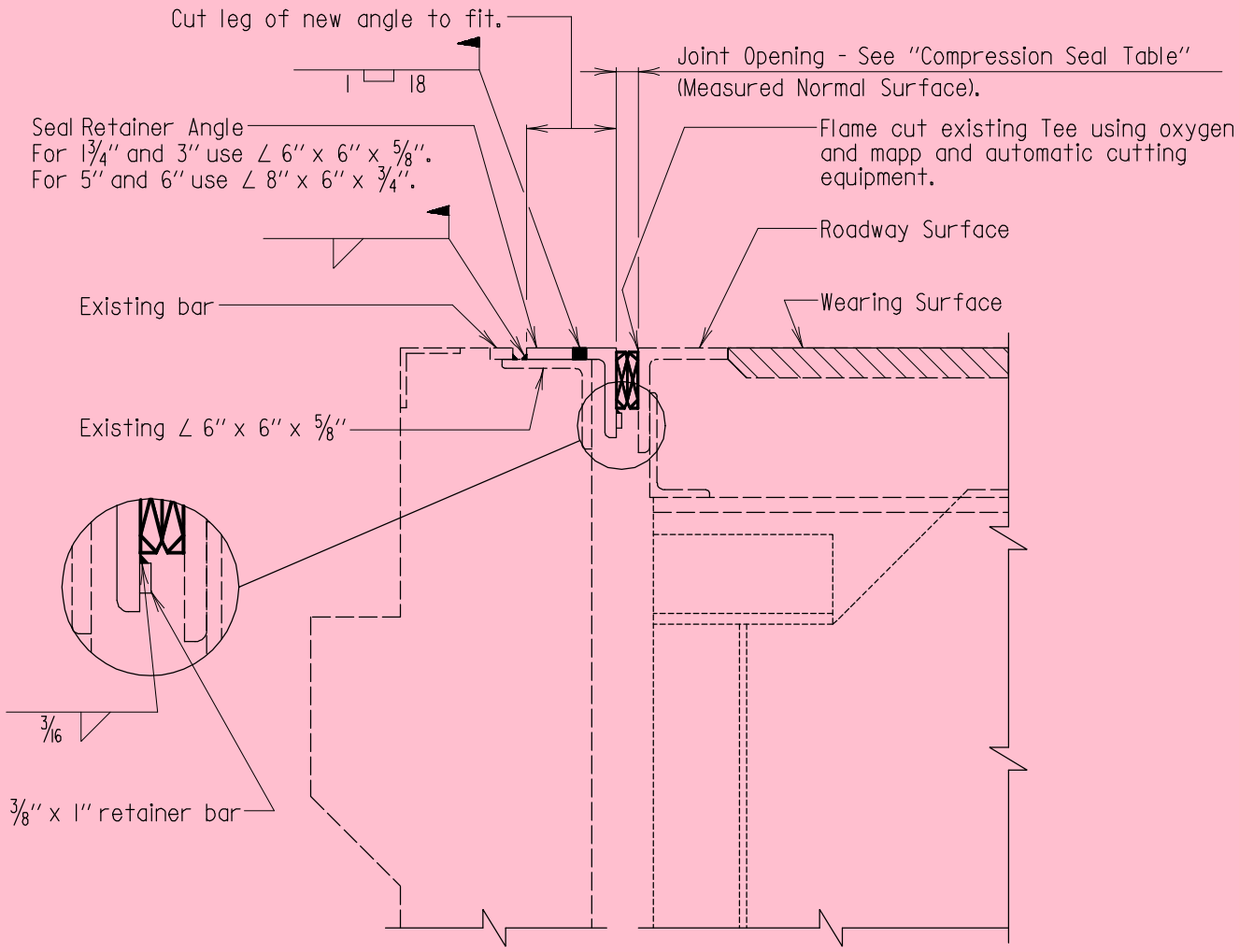

SECTION
Scale: 1"=1'-0"

COMPRESSION SEAL TABLE							
Location	Uncompressed Seal Width	Joint Opening @					
		40°F	50°F	60°F	70°F	80°F	90°F
	1¾"			1⅛"			
	3"			1 15/16 "			
	5"			3"			
	6"			3⅝"			

Note:
1. Existing Structure shown dashed.
2. Existing anchorage system for joint not shown.
3. Existing slabs to remain.
4. The 1¾ and 3 in. seals to be one piece for full length of seal (no joints).
5. The 5 and 6 in. seals may have one shop splice per joint, if the length of joint exceeds 50 ft. Splice shall be at least 15 ft. from gutter line.
6. Location of holes for plug welds to be verified in field.

APPROVAL	
R.S. Freedman DIRECTOR OFFICE OF STRUCTURES	
DATE: 1/6/78	
REVISIONS	
SHA	FHWA
9-24-96	
11-17-97	
7-26-01	
1-7-02	
FHWA APPROVAL	
DATE: 1-31-78	

STATE OF MARYLAND
DEPARTMENT OF TRANSPORTATION
STATE HIGHWAY ADMINISTRATION
OFFICE OF STRUCTURES

MODIFIED EXISTING BRIDGE DECK
EXPANSION JOINT AT ABUTMENTS

STANDARD NO. SUP-JT(MJ)-101 SHEET 1 OF 1

SUPER-ROADWAY JOINTS

OLD NO. BR-SS(7.04)-77-66

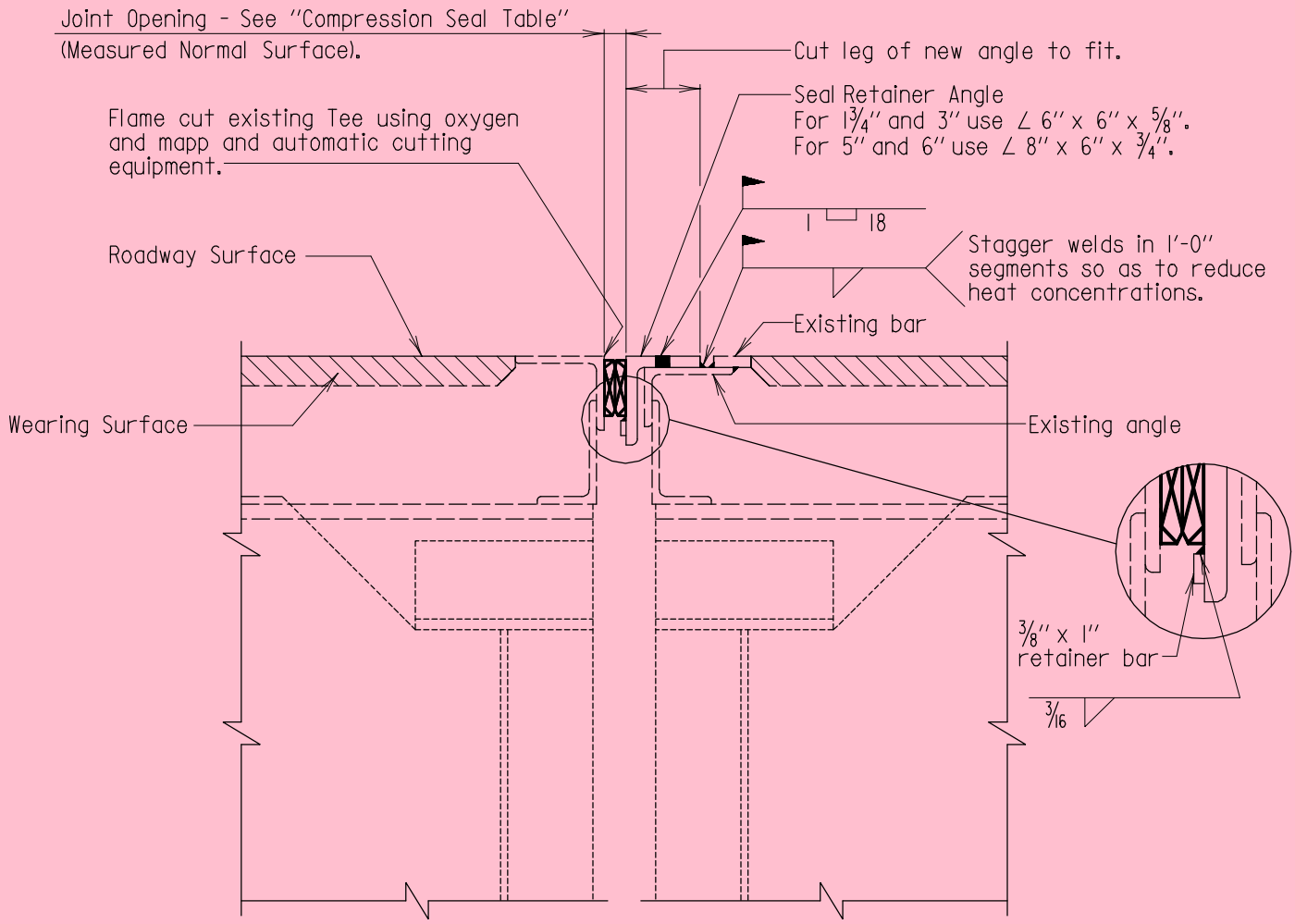

SECTION
Scale: 1"=1'-0"

COMPRESSION SEAL TABLE							
Location	Uncompressed Seal Width	Joint Opening @					
		40°F	50°F	60°F	70°F	80°F	90°F
	1¾"			1⅛"			
	3"			1 15/16 "			
	5"			3"			
	6"			3⅝"			

Note:
1. Existing Structure shown dashed.
2. Existing anchorage system for joint not shown.
3. Existing slabs to remain.
4. The 1¾" and 3" seals to be one piece for full length of seal (no joints).
5. The 5" and 6" seals may have one shop splice per joint, if the length of joint exceeds 50'. Splice shall be at least 15' from gutter line.

APPROVAL	
B.S. Freedman DIRECTOR OFFICE OF STRUCTURES	
DATE: 1/6/78	
REVISIONS	
SHA	FHWA
9-24-96	
11-17-97	
7-26-01	
1-7-02	
FHWA APPROVAL	
DATE: 1-31-78	

STATE OF MARYLAND
DEPARTMENT OF TRANSPORTATION
STATE HIGHWAY ADMINISTRATION
OFFICE OF STRUCTURES

MODIFIED EXISTING BRIDGE DECK
EXPANSION JOINT AT PIERS

STANDARD NO. SUP-JT(MJ)-102 SHEET 1 OF 1

SUPER-ROADWAY JOINTS

OLD NO. BR-SS(7.05)-77-67

If this edge is rough or deteriorated (to be determined by the Engineer) saw cut to provide a smooth surface (Saw cut a maximum of 1/2" width).*
If existing surface is to remain, without cutting, it shall be abrasive blasted to provide a good clean surface to apply seal adhesive.

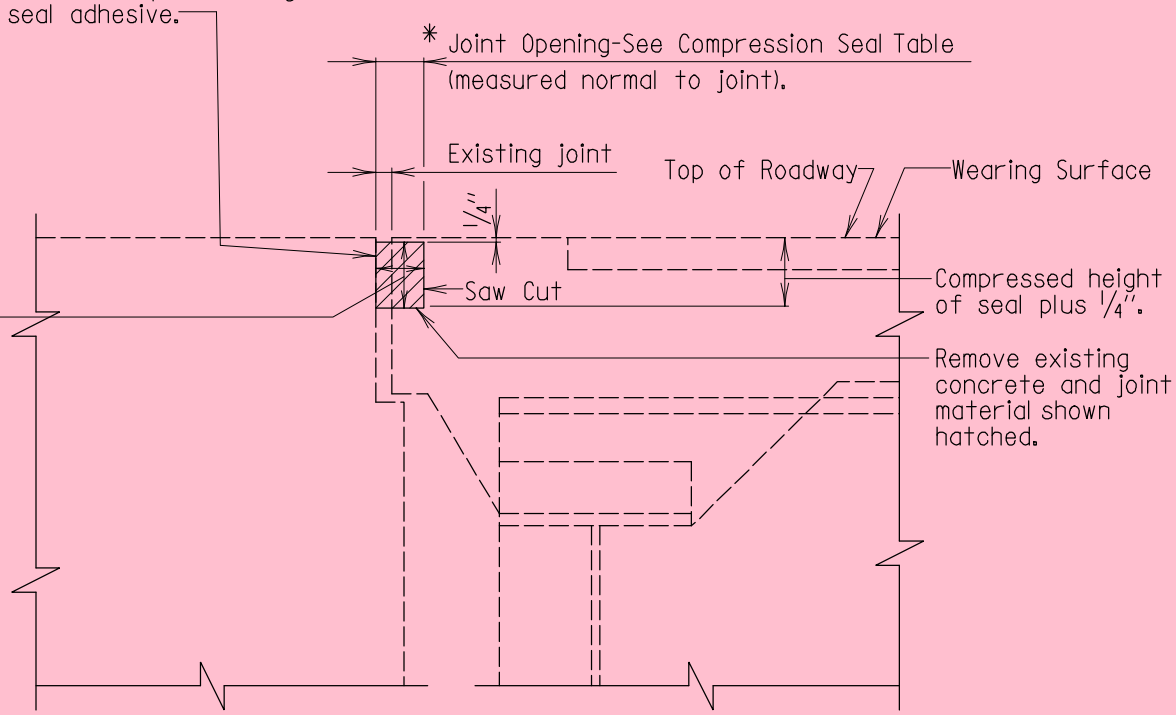

* Prior to ordering joint material each joint shall be evaluated to determine width of saw cutting required. If at 60° F or below the joint opening is 2" or less (measured perpendicular to ℄ of joint) the 3" seal may be used. For openings greater than above, contact Office of Bridge Development. If the larger seal is required, the Contractor will be paid the differential in cost of material between the two seals being compared.

SECTION
Scale: 1" = 1'-0"

COMPRESSION SEAL TABLE

Location	Uncompressed Seal Width	Joint Opening @						Movement Rating
		40°F	50°F	60°F	70°F	80°F	90°F	
	1 3/4"			1 1/8"				0.66"
	3"			1 15/16"				1.25"
	5"			3"				2.50"
	6"			3 5/8"				2.85"

Note:
1. Existing Structure shown dashed.
2. Existing slab to remain.
3. The 1 3/4" and 3" seals to be one piece for full length of seal (no joints).
4. The 5" and 6" seals may have one shop splice per joint, if the length of joint exceeds 50'. Splice shall be at least 15' from gutter line.
5. Joint area shall be thoroughly cleaned just prior to placing seal.

APPROVAL
R. S. Friedman DIRECTOR OFFICE OF STRUCTURES
DATE: 3/30/84

REVISIONS	
SHA	FHWA
3-27-89	
10-27-92	
1-22-01	

FHWA APPROVAL
DATE: 5-3-84

STATE OF MARYLAND
DEPARTMENT OF TRANSPORTATION
STATE HIGHWAY ADMINISTRATION
OFFICE OF STRUCTURES

MODIFIED EXISTING BRIDGE DECK
NON-ARMORED EXPANSION JOINT AT ABUTMENTS

STANDARD NO. SUP-JT(MJ)-201 SHEET 1 OF 1

SUPER-ROADWAY JOINTS

OLD NO. BR-SS(7.13)-84-160

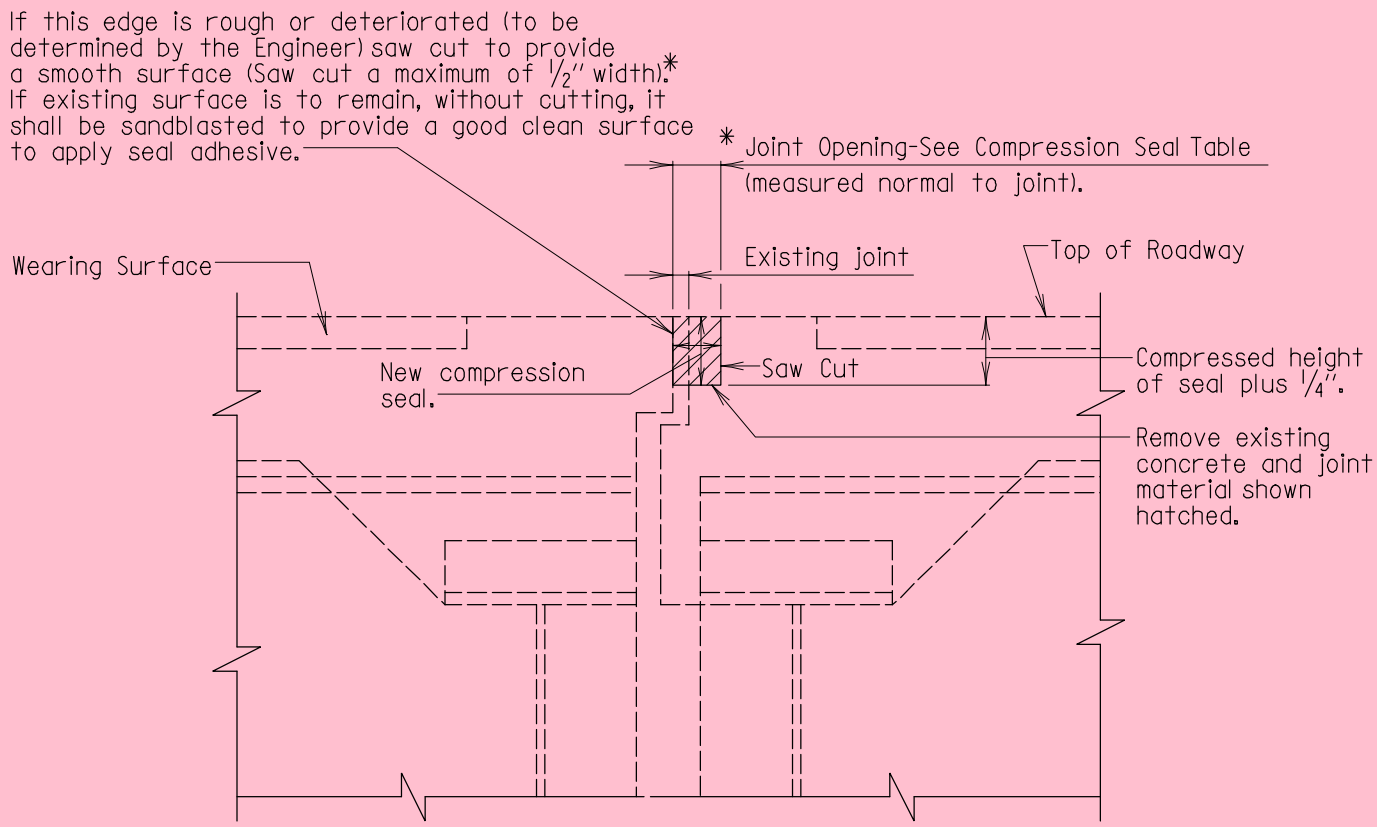

* Prior to ordering joint material each joint shall be evaluated to determine width of saw cutting required. If at 60° F or below the joint opening is 2" or less (measured perpendicular to ℄ of joint) the 3" seal may be used. For openings greater than above, contact Office of Bridge Development. If the larger seal is required, the Contractor will be paid the differential in cost of material between the two seals being compared.

SECTION

Scale: 1" = 1'-0"

COMPRESSION SEAL TABLE

Location	Uncompressed Seal Width	Joint Opening @						Movement Rating
		40°F	50°F	60°F	70°F	80°F	90°F	
	1 3/4"			1 1/8"				0.66"
	3"			1 15/16"				1.25"
	5"			3"				2.50"
	6"			3 5/8"				2.85"

Note:
1. Existing Structure shown dashed.
2. Existing slab to remain.
3. The 1 3/4" and 3" seals to be one piece for full length of seal (no joints).
4. The 5" and 6" seals may have one shop splice per joint, if the length of joint exceeds 50'. Splice shall be at least 15' from gutter line.
5. Joint area shall be thoroughly cleaned just prior to placing seal.

APPROVAL	
R.S. Freedman DIRECTOR OFFICE OF STRUCTURES DATE: 11/14/80	
REVISIONS	
SHA	FHWA
10-27-92	
6-4-93	
2-11-97	
11-17-97	

FHWA APPROVAL
DATE: 3-16-81

STATE OF MARYLAND
DEPARTMENT OF TRANSPORTATION
STATE HIGHWAY ADMINISTRATION
OFFICE OF STRUCTURES

MODIFIED EXISTING BRIDGE DECK
NON-ARMORED EXPANSION JOINT AT PIERS

STANDARD NO. SUP-JT(MJ)-202 SHEET 1 OF 1

SUPER-ROADWAY JOINTS

OLD NO. BR-SS(7.10)-80-116

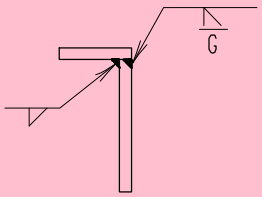

Minimum plate size, 3/8".

ALTERNATE TO WALKWAY ANGLE

Scale: None

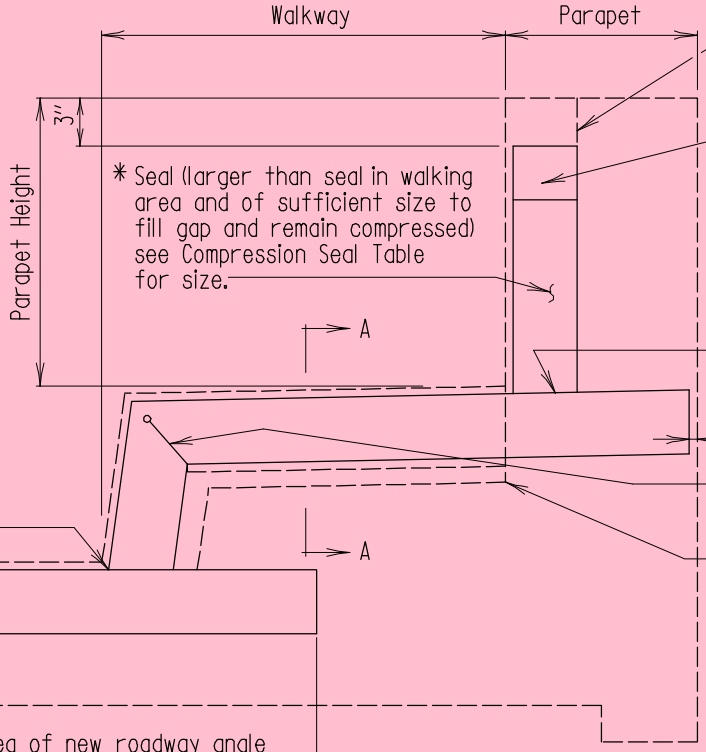

Field vulcanize seal at gutter line, and field weld roadway and walkway angles, with 5/16" fillet weld.

Roadway Seal

Extend leg of new roadway angle and seal 9" past gutter line.

SECTION

Scale: 1" = 1'-0"

* If this requires a seal larger than 6", then a flat continuous filler strip of sufficient thickness to keep seal in compression shall be used. Strip to be same material, width and height of seal and shall be firmly attached with adhesive to seal and concrete.

Cut leg of new angle to fit. Angle to run across top of walkway and bend down face of curb. Leg to be as long as possible to minimize gap between weld and existing bar.

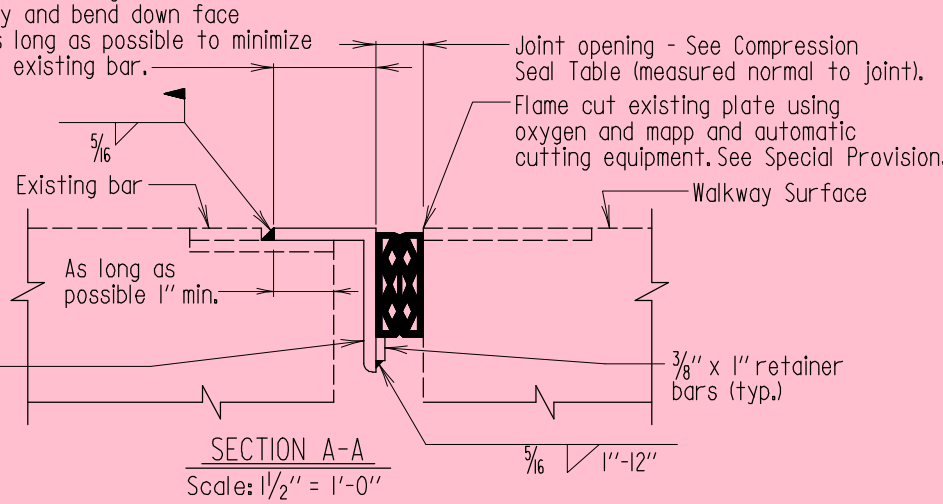

SECTION A-A

Scale: 1 1/2" = 1'-0"

COMPRESSION SEAL TABLE								
Location	Uncompressed Seal Width	Joint Opening @						Movement Rating
		40°F	50°F	60°F	70°F	80°F	90°F	
	1 3/4"			1 1/8"				0.66"
	3"			1 15/16"				1.25"
	5"			3"				2.50"
	6"			3 5/8"				2.85"

Note:
1. Existing structure shown dashed.
2. Existing anchorage system for joint, not shown.
3. Existing slab to remain.
4. All gutter line splices of seal, if possible, to be shop fabricated. All others may be field splices.
5. Joint area shall be thoroughly cleaned just prior to placing of seal.

APPROVAL	
E.S. Freedman DIRECTOR OFFICE OF STRUCTURES	
DATE: 11/17/80	
REVISIONS	
SHA	FHWA
9-9-82	11-29-85
3-27-89	6-8-90
10-27-92	
11-17-97	
FHWA APPROVAL DATE: 11-29-85	

STATE OF MARYLAND
DEPARTMENT OF TRANSPORTATION
STATE HIGHWAY ADMINISTRATION
OFFICE OF STRUCTURES

MODIFIED EXISTING BRIDGE
ARMORED JOINT AT WALKWAY

STANDARD NO. SUP-JT(MJ)-301 SHEET 1 OF 1

SUPER-ROADWAY JOINTS

OLD NO. BR-SS(7.12)-80-118

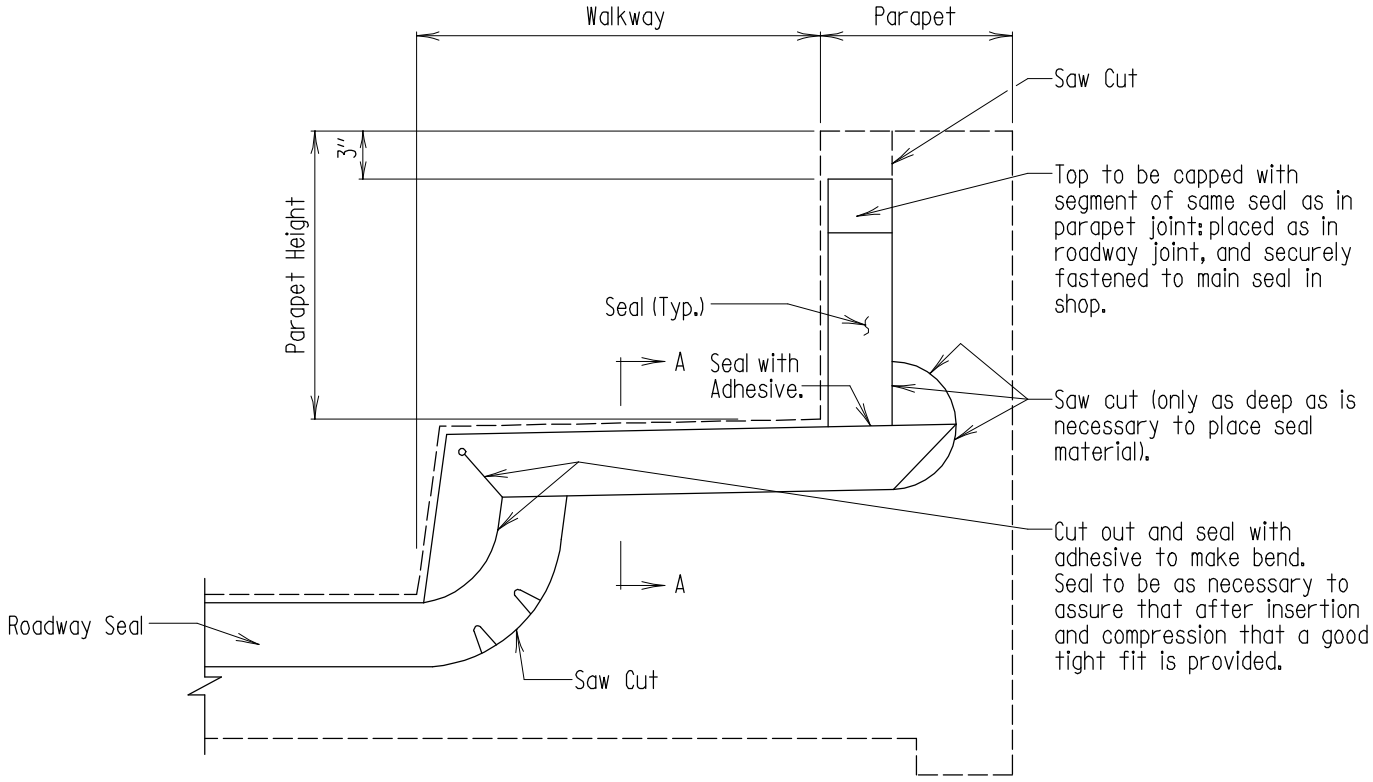

SECTION

Scale: 1" = 1'-0"

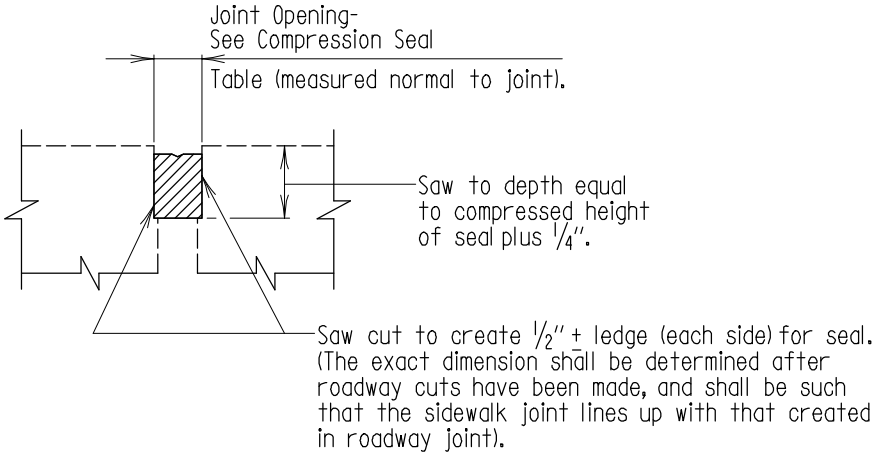

SECTION A-A

Scale: 1" = 1'-0"

Note:
1. Existing structure shown dashed.
2. Existing slab to remain.
3. All gutter line splices of seal, if possible, shall be shop fabricated. All others may be field splices.
4. Joint area shall be thoroughly cleaned just prior to placing of seal.

APPROVAL	
R.S. Friedman DIRECTOR OFFICE OF STRUCTURES	
DATE: 11/17/80	
REVISIONS	
SHA	FHWA
9-9-82	11-29-85
FHWA APPROVAL	
DATE: 11-29-85	

STATE OF MARYLAND
DEPARTMENT OF TRANSPORTATION
STATE HIGHWAY ADMINISTRATION
OFFICE OF STRUCTURES

MODIFIED EXISTING BRIDGE
NON-ARMORED JOINT AT WALKWAY

STANDARD NO. SUP-JT(MJ)-302 SHEET 1 OF 1

SUPER-ROADWAY JOINTS

OLD NO. BR-SS(7.11)-80-117

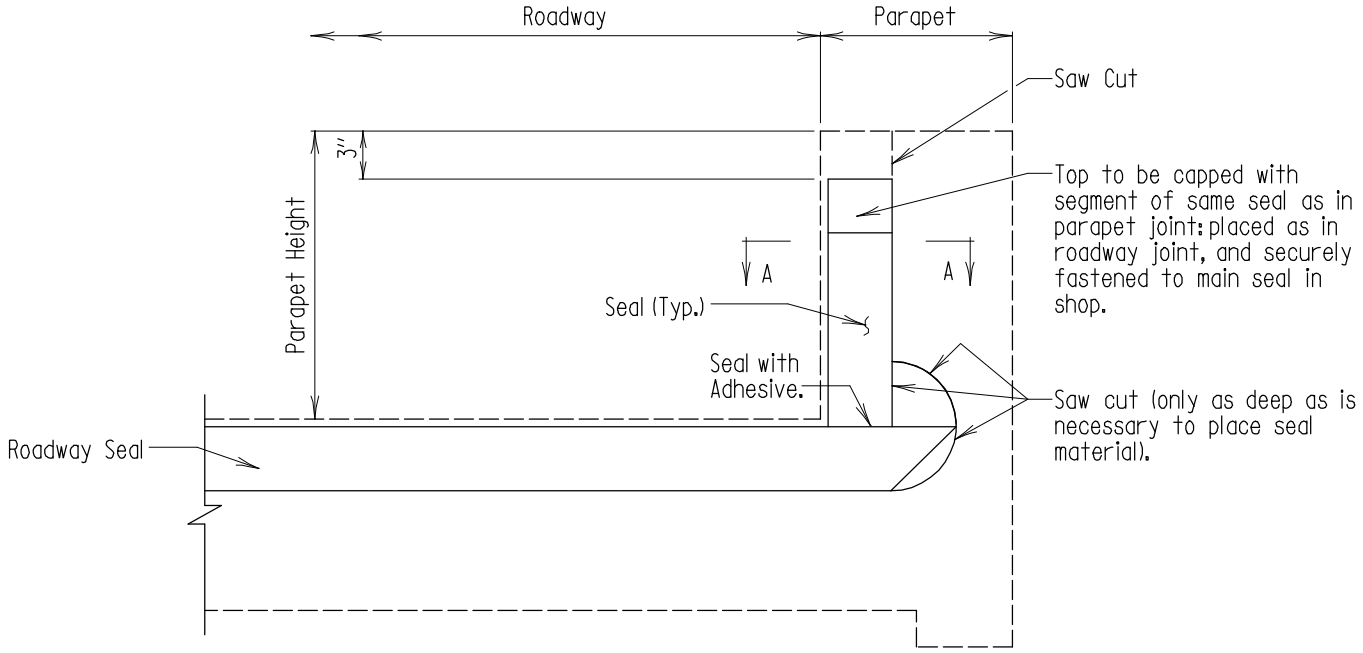

SECTION
Scale: 1" = 1'-0"

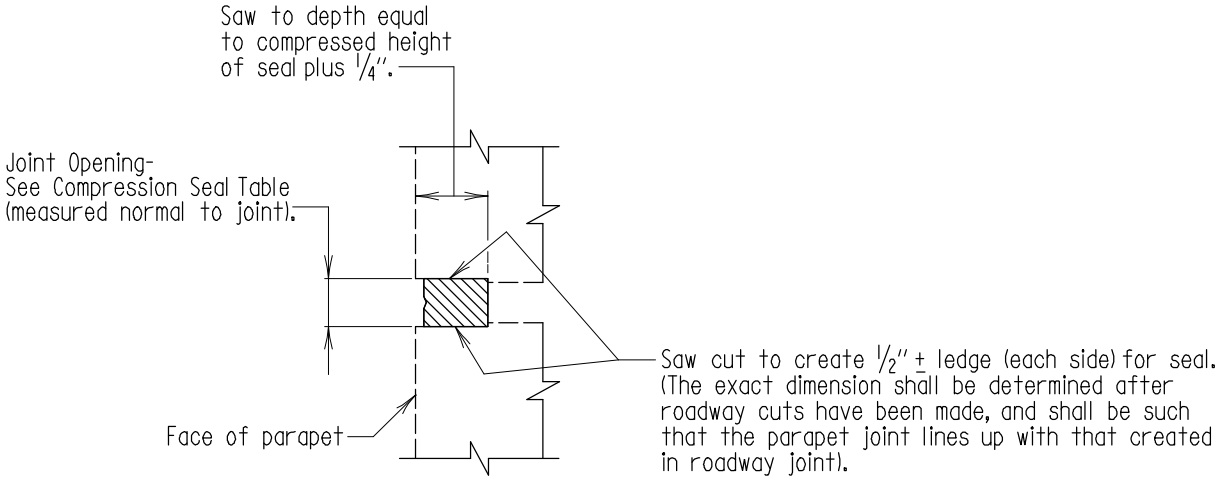

SECTION A-A
Scale: 1" = 1'-0"

Note:
1. Existing structure shown dashed.
2. Existing slab to remain.
3. All gutter line splices of seal, if possible, shall be shop fabricated. All others may be field splices.
4. Joint area shall be thoroughly cleaned just prior to placing of seal.

APPROVAL	
R.S. Freedman DIRECTOR OFFICE OF STRUCTURES	
DATE: 6/21/94	
REVISIONS	
SHA	FHWA

FHWA APPROVAL
DATE:

STATE OF MARYLAND
DEPARTMENT OF TRANSPORTATION
STATE HIGHWAY ADMINISTRATION
OFFICE OF STRUCTURES

MODIFIED EXISTING BRIDGE
NON-ARMORED JOINT AT PARAPET
(NO WALKWAY)

STANDARD NO. SUP-JT(MJ)-303 SHEET 1 OF 1

SUPER-ROADWAY JOINTS

OLD NO. BR-SS(7.16)-94-300

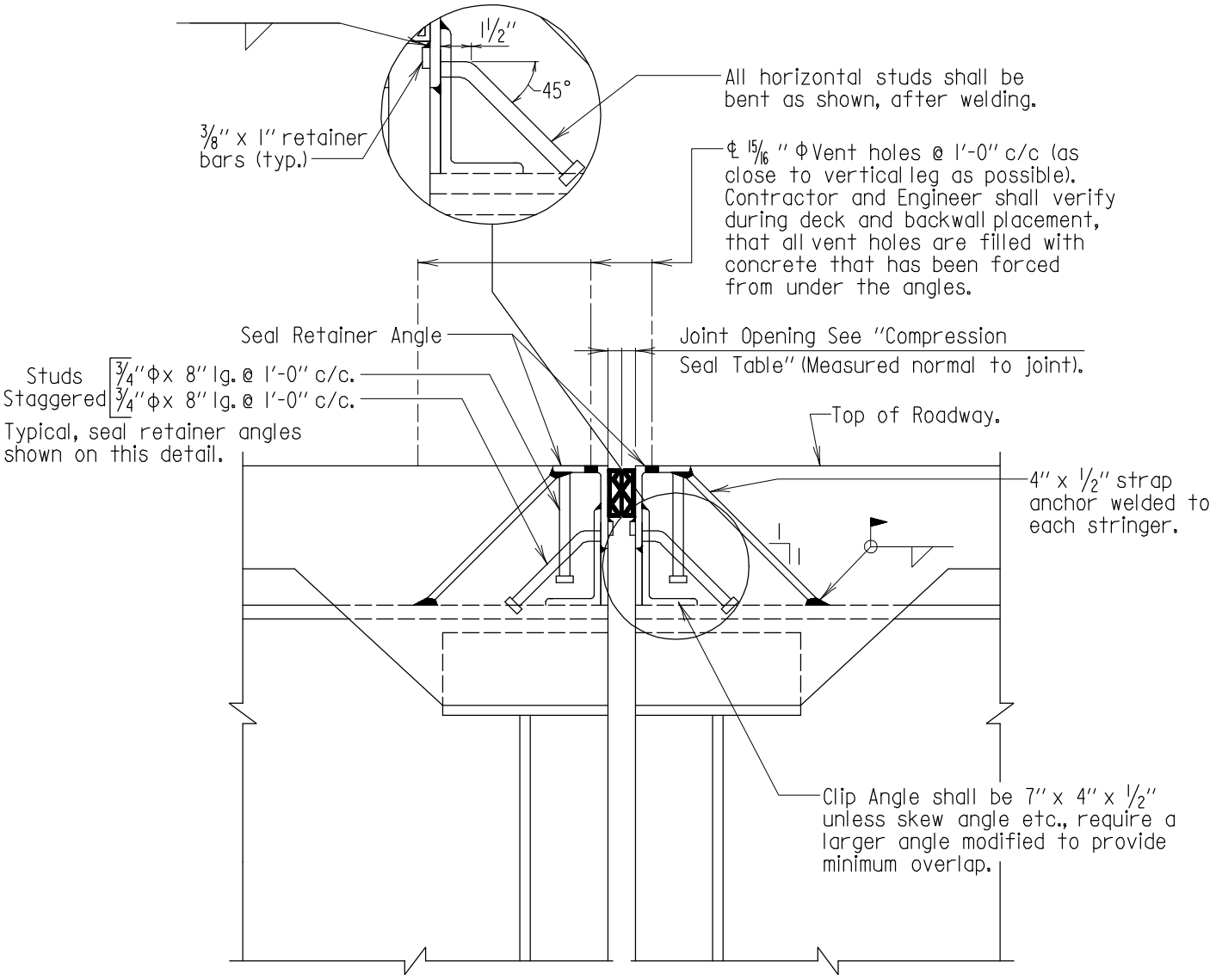

SECTION

Scale: 1" = 1'-0"

Notes:

1. New bridge details shown.
2. See Standard No. SUP-SS(DR)-101 showing special attachment of new clip angle.
3. Compression seal to be placed after joint angles are set, and deck is placed.
4. Ship and erect seal retaining angles as a unit.

APPROVAL	
E.S. Friedman DIRECTOR OFFICE OF STRUCTURES	
DATE: 12/12/79	
REVISIONS	
SHA	FHWA
9-24-96	
11-17-97	
1-7-02	
7-19-06	

FHWA APPROVAL	
DATE: 4-4-80	

STATE OF MARYLAND
DEPARTMENT OF TRANSPORTATION
STATE HIGHWAY ADMINISTRATION
OFFICE OF STRUCTURES

COMPRESSION SEAL ROADWAY JOINTS AT PIERS

STANDARD NO. SUP-JT(MJ)-401 SHEET 1 OF 1

SUPER-ROADWAY JOINTS

OLD NO. BR-SS(7.03)-79-65

SUPERSTRUCTURE

BEARINGS

(SUP-BR)

SUPERSTRUCTURE

BEARINGS

STEEL BEARINGS

(SUP-BR(SB))

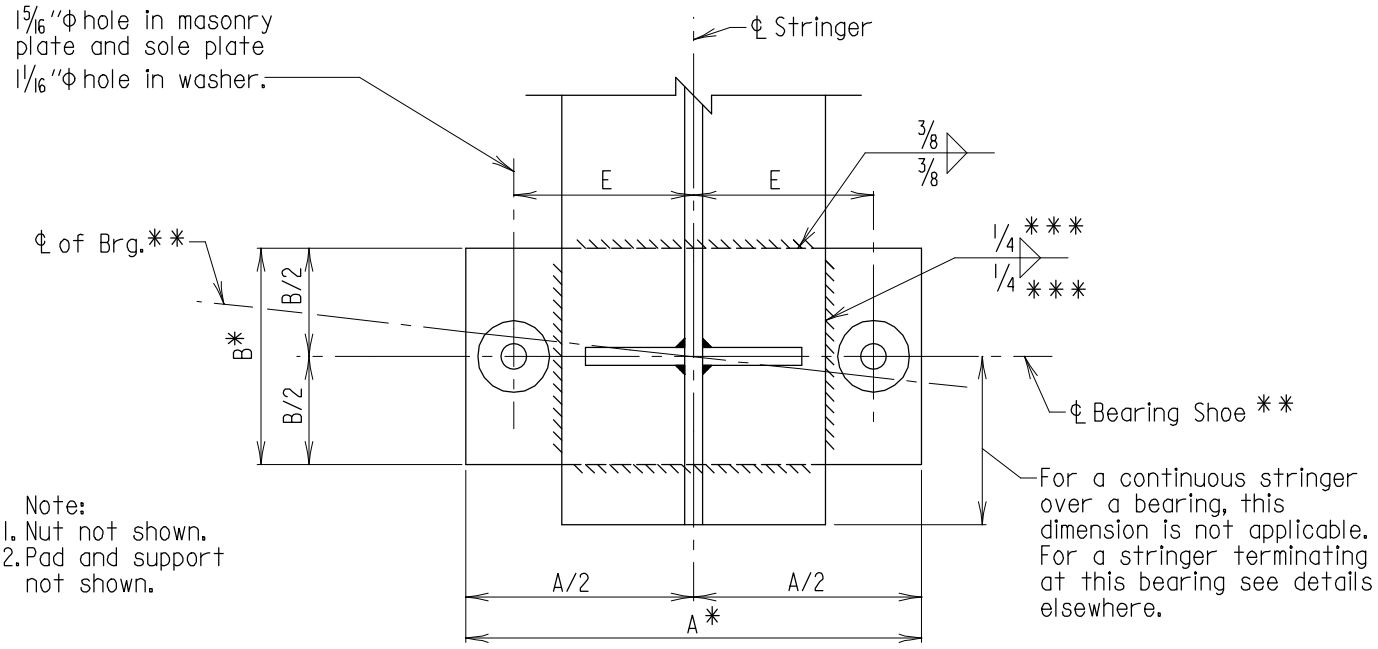

Note:
1. Nut not shown.
2. Pad and support not shown.

PLAN
Scale: 1 1/2" = 1'-0"

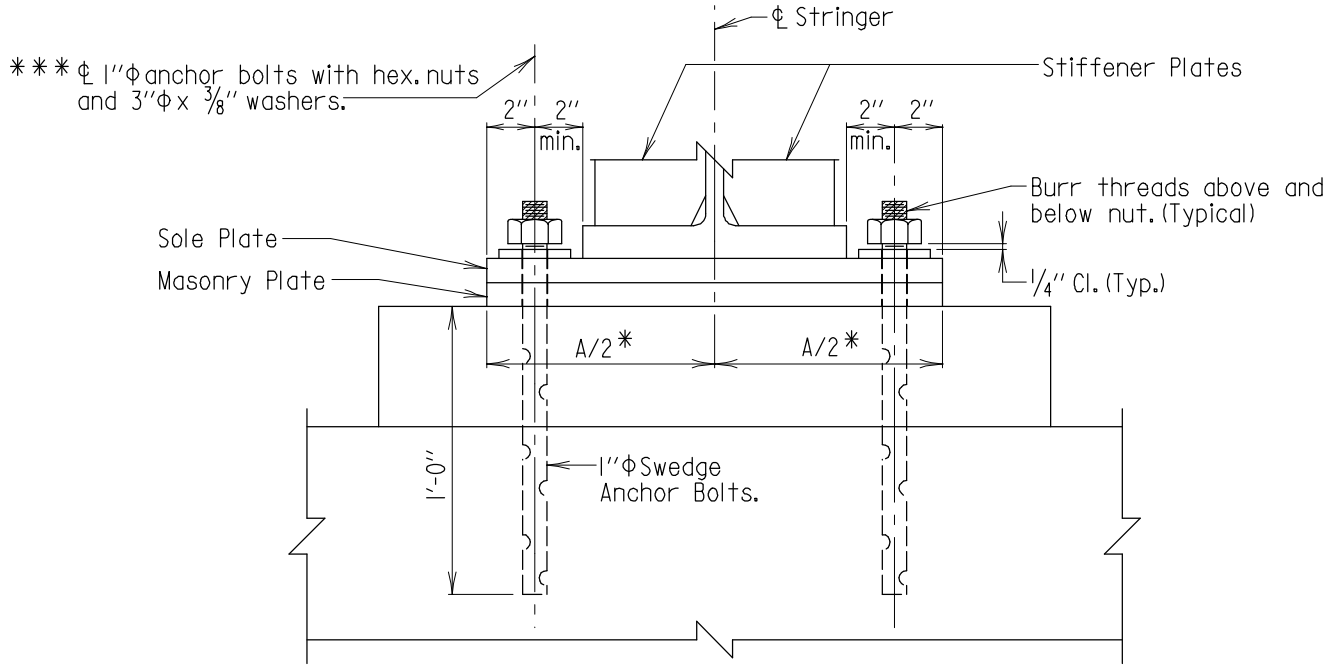

ELEVATION
Scale: 1 1/2" = 1'-0"

* Edges may be left as cut or cast.

** Where bridge is not skewed, ℄ Brg. and ℄ shoe are coincident.

*** Minimums shown. Engineer Shall Design.

APPROVAL	
R.S. Freedman DIRECTOR OFFICE OF STRUCTURES	
DATE: 11/19/99	
REVISIONS	
SHA	FHWA
11-9-00	
7-26-06	
10-9-07	
8-19-09	

FHWA APPROVAL	
DATE: 7-19-11	

STATE OF MARYLAND
DEPARTMENT OF TRANSPORTATION
STATE HIGHWAY ADMINISTRATION
OFFICE OF STRUCTURES

VERIFIED 10-9-2007 LRFD

FIXED BEARING
SHORT LENGTH SPANS
(GRADE 50 STEEL)

STANDARD NO. SUP-BR(SB)-101 SHEET 1 OF 2

SUPER - BEARINGS

OLD NO. BR-SS(9.08)-99-338(L)

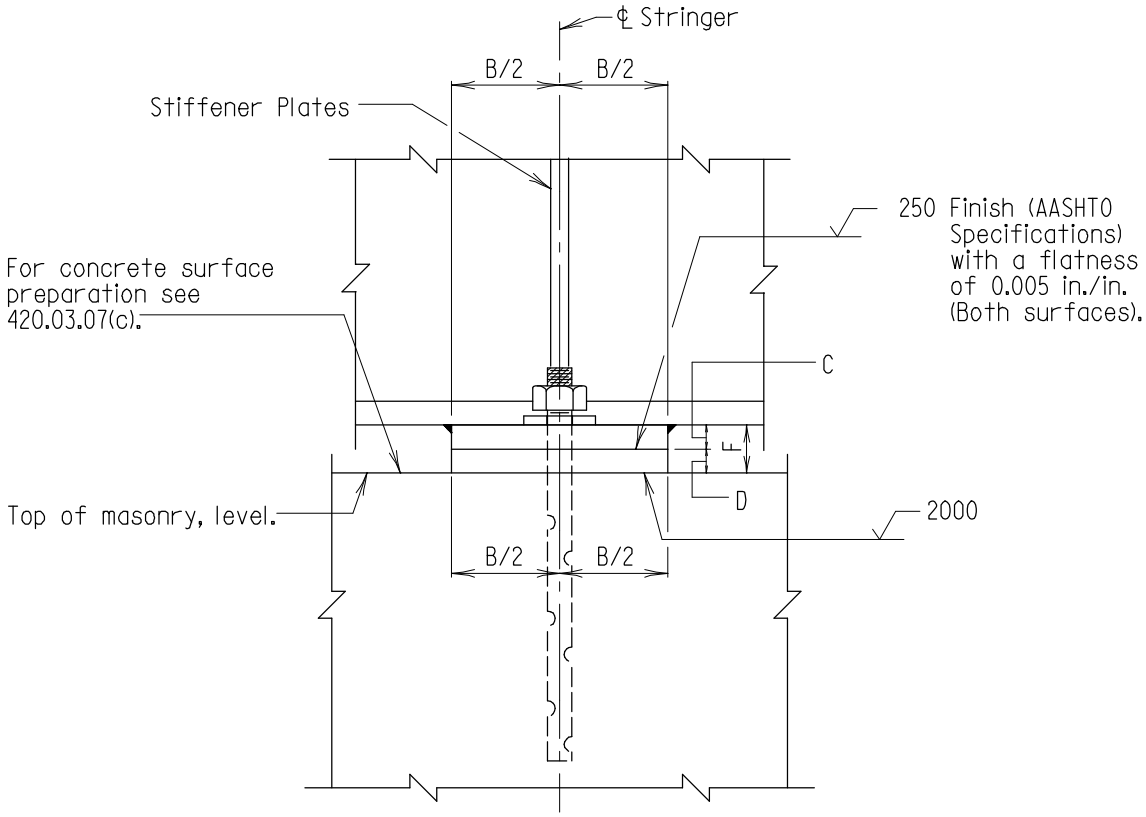

SIDE VIEW
Scale: 1½" = 1'-0"

DATA SCHEDULE									
Type	Sole Plate			Masonry PL			Hole Loc.	Hgt.	Service Loads (Kips)
	A	B	C	A	B	D	E	F	Vert.
SF50 - I	17	9	1	17	9	1	6½	2	70
SF50 - II	19	9	1	19	9	1	7½	2	85
SF50 - III	21	9	1	21	9	1	8½	2	100

Note: All dimensions are in inches.

Note:

1. Sole and masonry plates to be unpainted ASTM A 709 Grade 50 steel galvanized in accordance with A123. All areas that are to be welded shall be masked off prior to galvanizing and painted to match bridge color after welding.
2. Fill slots and holes around anchor bolts with nonhardening caulking compound or elastic joint sealer.
3. 1000 RMS (Finish all over) except where otherwise noted.
4. Top of sole plate must be beveled to fit grade of bottom flange. If sole plate must be beveled, dimension 'C' shall be measured at ℄ of bearing.
5. Unless otherwise noted, bearings shall be placed normal to ℄ of stringer.
6. Plates are to be shipped as units.
7. If more than one size bearing is called for, Contractor may furnish all bearings of the larger size provided the bearing pads are altered to accomodate same. No increase in any prices bid will be allowed if this option is selected.
8. This bearing for use on simple span steel stringer bridges less than 50'-0" long and/or comparable continuous span lengths.
9. All anchor bolts and washers shall be unpainted ASTM A 709 Grade 36 galvanized steel. All nuts shall be unpainted ASTM A 307 galvanized steel.

APPROVAL
E.S. Freedman DIRECTOR OFFICE OF STRUCTURES
DATE: 11/19/99

REVISIONS	
SHA	FHWA
1-22-01	
10-9-07	
12-22-14	

FHWA APPROVAL
DATE: 7-19-11

STATE OF MARYLAND
DEPARTMENT OF TRANSPORTATION
STATE HIGHWAY ADMINISTRATION
OFFICE OF STRUCTURES

VERIFIED 10-9-2007 LRFD

FIXED BEARING
SHORT LENGTH SPANS
(GRADE 50 STEEL)

STANDARD NO. SUP-BR(SB)-101 SHEET 2 OF 2

SUPER - BEARINGS

OLD NO. BR-SS(9.08)-99-338(L)

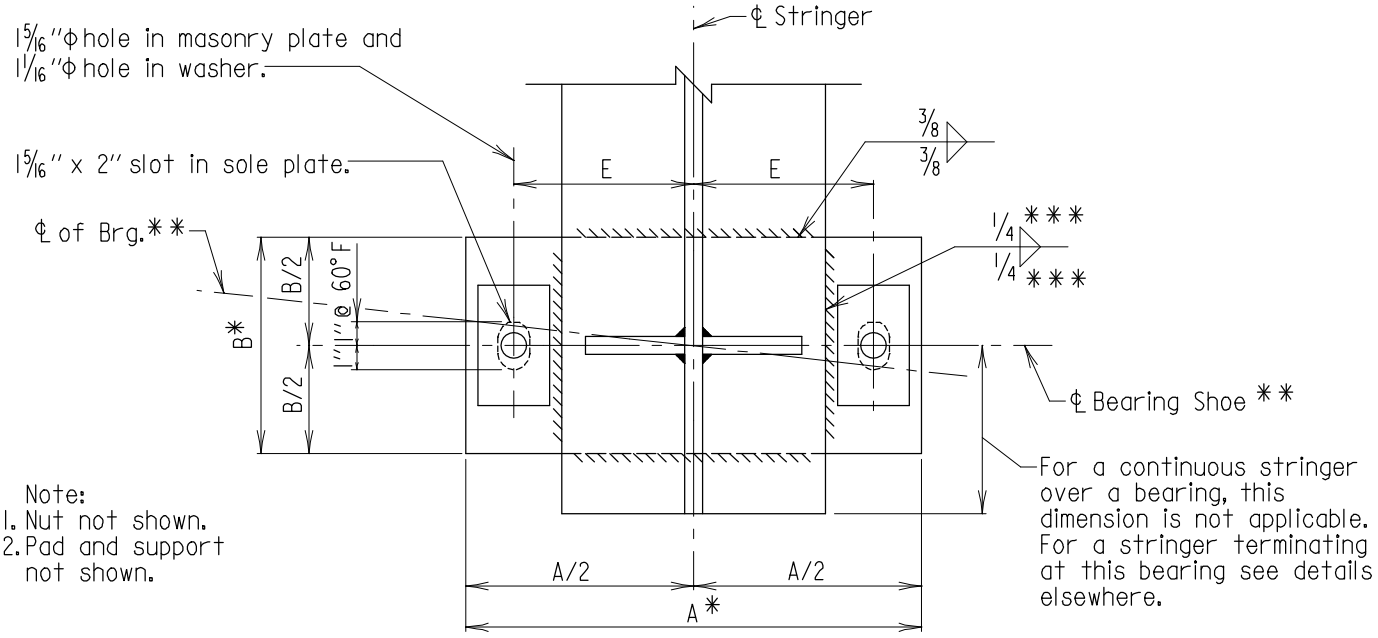

Note:
1. Nut not shown.
2. Pad and support not shown.

PLAN
Scale: 1 1/2" = 1'-0"

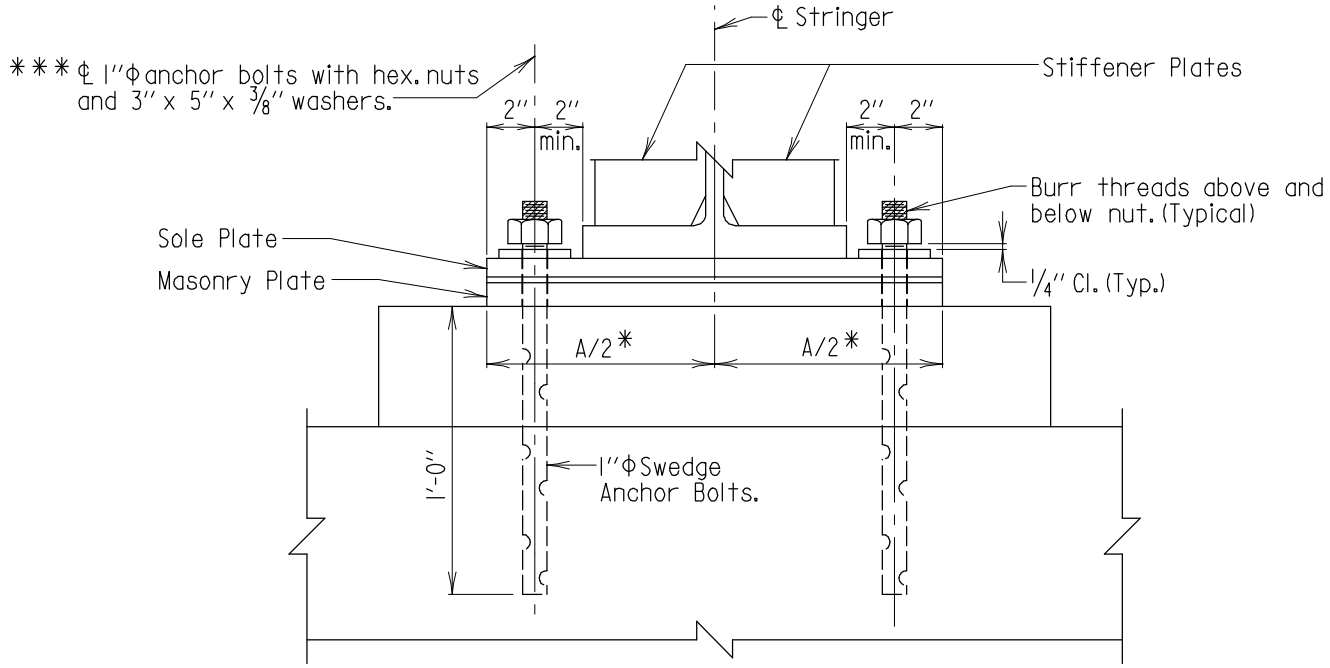

ELEVATION
Scale: 1 1/2" = 1'-0"

* Edges may be left as cut or cast.

** Where bridge is not skewed, ℄ Brg. and ℄ shoe are coincident.

*** Minimums shown. Engineer Shall Design.

APPROVAL	
E.S. Freedman DIRECTOR OFFICE OF STRUCTURES	
DATE: 11/19/99	
REVISIONS	
SHA	FHWA
7-26-06	
10-9-07	
8-19-09	

FHWA APPROVAL
DATE: 7-19-11

STATE OF MARYLAND
DEPARTMENT OF TRANSPORTATION
STATE HIGHWAY ADMINISTRATION
OFFICE OF STRUCTURES

VERIFIED 10-9-2007 LRFD

EXPANSION BEARING
SHORT LENGTH SPANS
(GRADE 50 STEEL)

STANDARD NO. SUP-BR(SB)-102 SHEET 1 OF 2

SUPER - BEARINGS

OLD NO. BR-SS(9.07)-99-337(L)

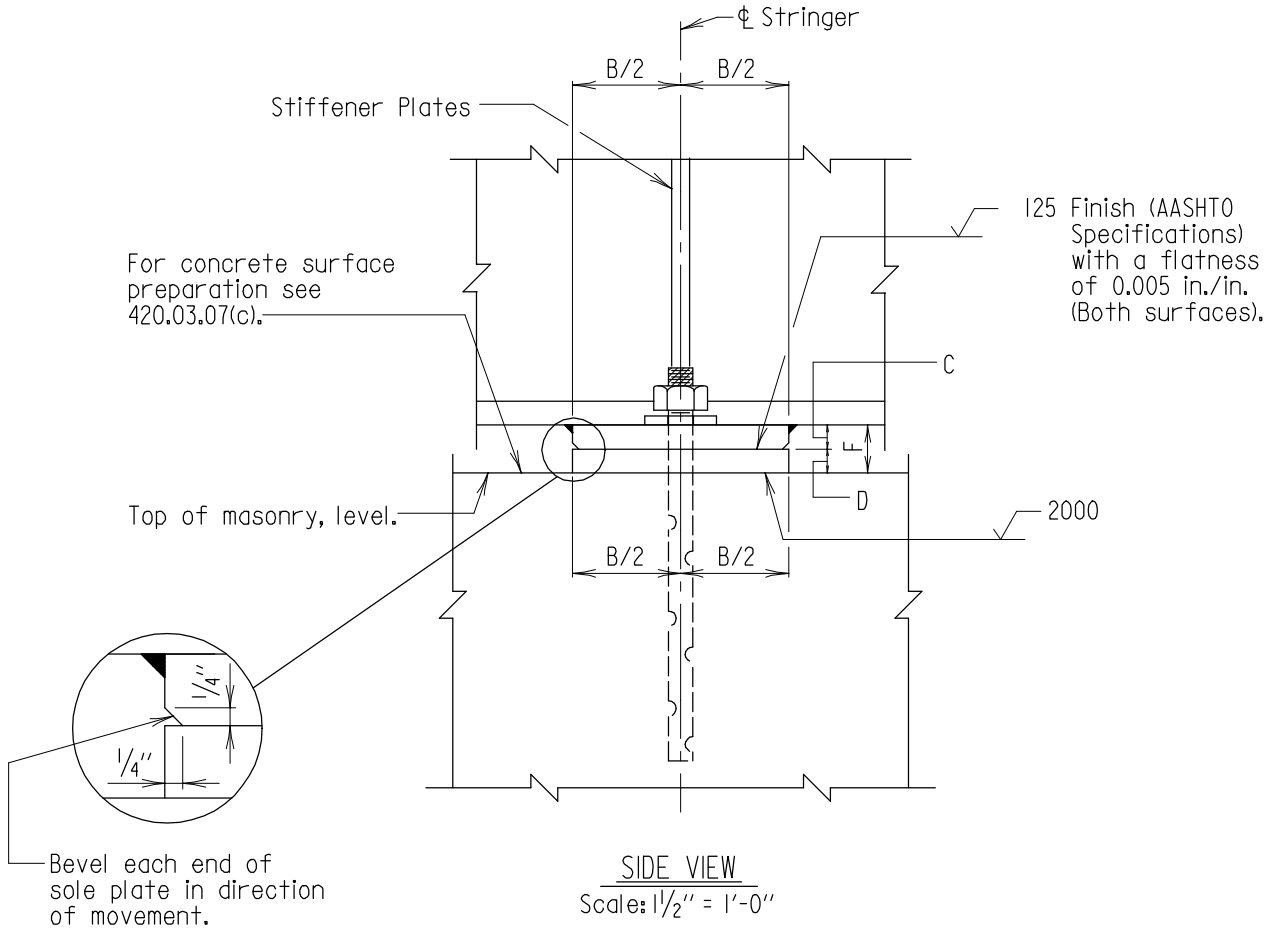

SIDE VIEW
Scale: 1½" = 1'-0"

DATA SCHEDULE									
Type	Sole Plate			Masonry PL			Hole Loc.	Hgt.	Service Loads (Kips)
	A	B	C	A	B	D	E	F	Vert.
SE50 - I	17	9	1	17	9	1	6½	2	70
SE50 - II	19	9	1¼	19	9	1¼	7½	2½	85
SE50 - III	21	9	1¼	21	9	1¼	8½	2½	100

Note: All dimensions are in inches.

Note:

1. Sole and masonry plates to be unpainted ASTM A 709 Grade 50 steel galvanized in accordance with A123. All areas that are to be welded shall be masked off prior to galvanizing and painted to match bridge color after welding.
2. Fill slots and holes around anchor bolts with nonhardening caulking compound or elastic joint sealer.
3. 1000 RMS (Finish all over) except where otherwise noted.
4. Top of sole plate must be beveled to fit grade of bottom flange. If sole plate must be beveled, dimension 'C' shall be measured at ℄ of bearing.
5. Unless otherwise noted, bearings shall be placed normal to ℄ of stringer.
6. Plates are to be shipped as units.
7. If more than one size bearing is called for, Contractor may furnish all bearings of the larger size provided the bearing pads are altered to accomodate same. No increase in any prices bid will be allowed if this option is selected.
8. This bearing for use on simple span steel stringer bridges less than 50'-0" long and/or comparable continuous span lengths.
9. All anchor bolts and washers shall be unpainted ASTM A 709 Grade 36 galvanized steel. All nuts shall be unpainted ASTM A 307 galvanized steel.

APPROVAL
E.S. Freedman DIRECTOR OFFICE OF STRUCTURES
DATE: 11/19/99

REVISIONS	
SHA	FHWA
10-9-07	
12-22-14	

FHWA APPROVAL
DATE: 7-19-11

STATE OF MARYLAND
DEPARTMENT OF TRANSPORTATION
STATE HIGHWAY ADMINISTRATION
OFFICE OF STRUCTURES

VERIFIED 10-9-2007 LRFD

EXPANSION BEARING
SHORT LENGTH SPANS
(GRADE 50 STEEL)

STANDARD NO. SUP-BR(SB)-102 SHEET 2 OF 2

SUPER - BEARINGS

OLD NO. BR-SS(9.07)-99-337(L)

For $1\frac{1}{4}''\phi$ anchor bolt use $1\frac{9}{16}''\phi$ hole in masonry and sole plates $1\frac{5}{16}''\phi$ hole in washer.
For $1\frac{1}{2}''\phi$ anchor bolt use $1\frac{13}{16}''\phi$ hole in masonry and sole plates $1\frac{9}{16}''\phi$ hole in washer.

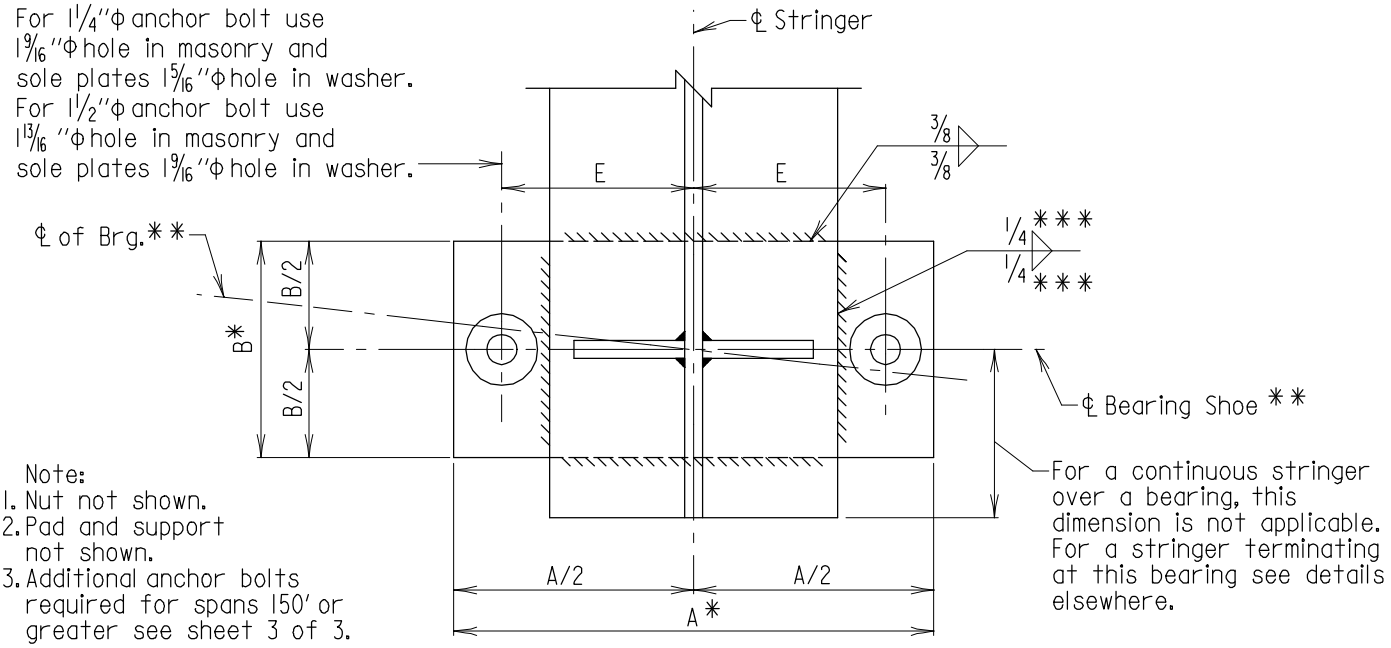

For a continuous stringer over a bearing, this dimension is not applicable. For a stringer terminating at this bearing see details elsewhere.

Note:
1. Nut not shown.
2. Pad and support not shown.
3. Additional anchor bolts required for spans 150' or greater see sheet 3 of 3.

PLAN
Scale: $1\frac{1}{2}'' = 1'-0''$

*** For spans under 100' use $1\frac{1}{4}''\phi$ swedge anchor bolts with hex. nuts and $3''\phi \times \frac{3}{8}''$ washer.
For spans over 100' use $1\frac{1}{2}''\phi$ swedge anchor bolts with hex. nuts and $3''\phi \times \frac{3}{8}''$ washer.

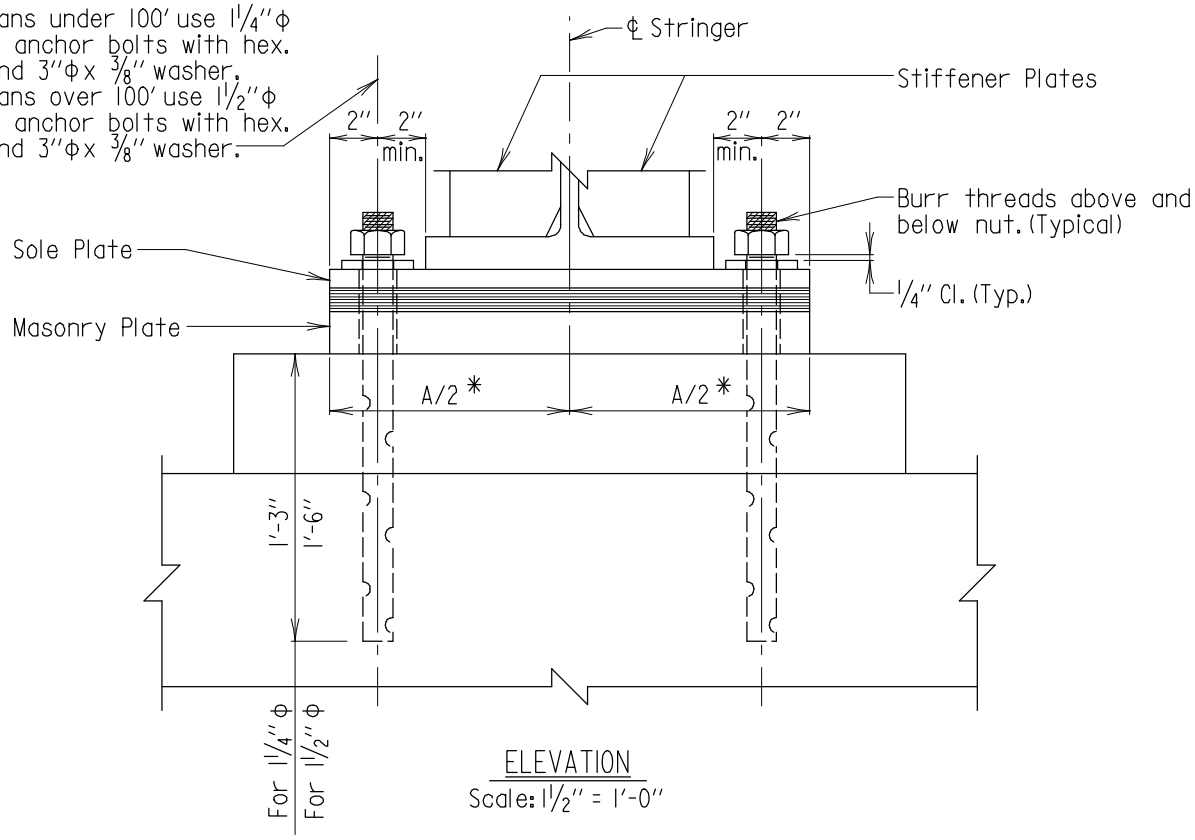

ELEVATION
Scale: $1\frac{1}{2}'' = 1'-0''$

* Edges may be left as cut or cast.

** Where bridge is not skewed, ℄ Brg. and ℄ shoe are coincident.

*** Minimums shown. Engineer Shall Design.

APPROVAL
E.S. Freedman DIRECTOR OFFICE OF STRUCTURES
DATE: 11/19/99

REVISIONS	
SHA	FHWA
7-26-06	
10-9-07	
1-21-09	
8-19-09	

FHWA APPROVAL
DATE: 7-19-11

STATE OF MARYLAND
DEPARTMENT OF TRANSPORTATION
STATE HIGHWAY ADMINISTRATION
OFFICE OF STRUCTURES

VERIFIED 10-9-2007 LRFD

FIXED BEARING
MEDIUM LENGTH SPANS
(GRADE 50 STEEL)

STANDARD NO. SUP-BR(SB)-103 SHEET 1 OF 3

SUPER - BEARINGS

OLD NO. BR-SS(9.06)-99-336(L)

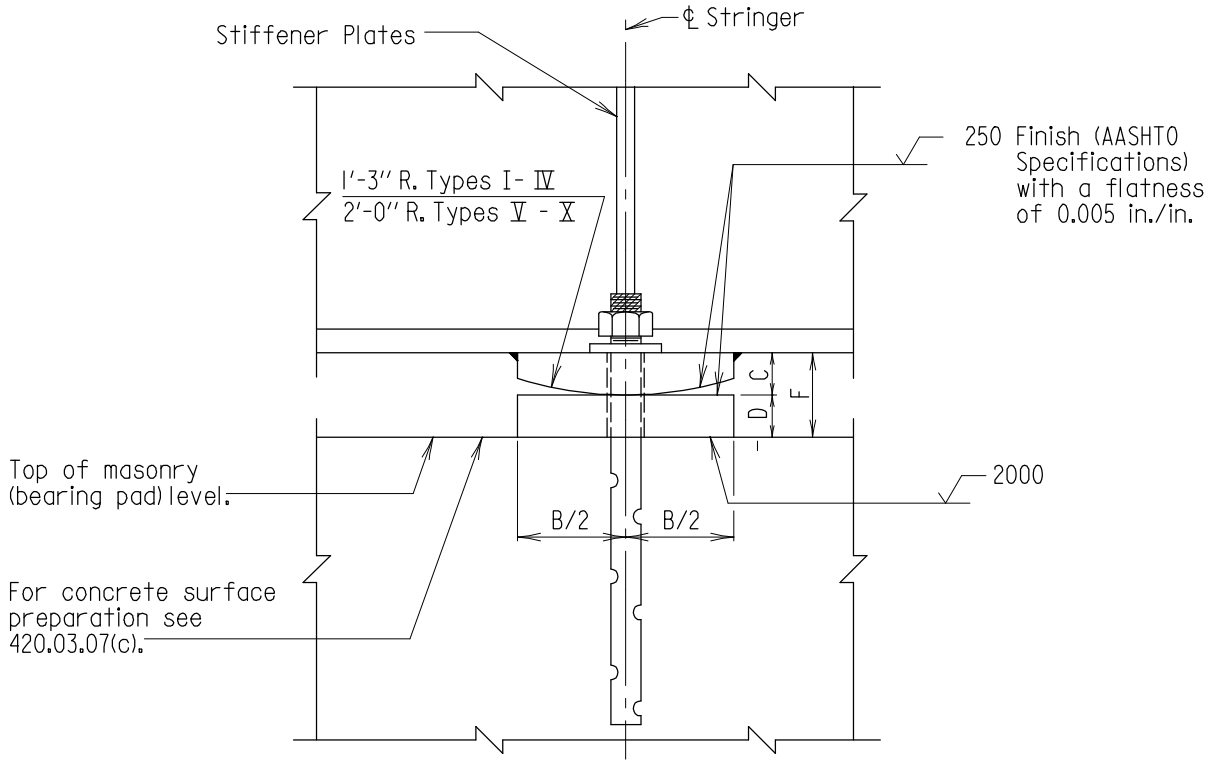

SIDE VIEW

Scale: 1½" = 1'-0"

DATA SCHEDULE											
Type	Sole Plate			Masonry ℙ			Hole Loc.	Hgt.	Max Bottom Fl. Width	Strength Limit State Loads	Service Limit State Loads
	A	B	C	A	B	D	E	F			
MF50 - I	20	9	1¾	20	9	1¾	8	3½	12	300k	185k
MF50 - II	22	11	1⅞	22	11	1⅞	9	3¾	14	400k	250k
MF50 - III	24	12	2	24	12	2	10	4	16	500k	310k
MF50 - IV	26	13	2¼	26	13	2¼	11	4½	18	600k	375k
MF50 - V	30	15	2½	30	15	2½	13	5	22	700k	440k
MF50 - VI	32	16	2¾	32	16	2¾	14	5½	24	800k	505k
MF50 - VII	34	18	2⅞	34	18	2⅞	15	5¾	26	900k	570k
MF50 - VIII	36	20	3	36	20	3	16	6	28	1000k	635k
MF50 - IX	38	22	3¼	38	22	3	17	6¼	30	1100k	700k
MF50 - X	40	24	3¾	40	24	3¼	18	7	32	1200k	760k

Note: All dimensions are in inches.

Note:

1. Sole and masonry plates to be ASTM A 709 Grade 50 steel painted to match finished bridge color.
2. Fill slots and holes around anchor bolts with nonhardening caulking compound or elastic joint sealer.
3. 1000 RMS (Finish all over) except where otherwise noted.
4. Compressive strength of concrete bearing area shall be 3.5 ksi or greater.
5. Top of sole plate must be beveled to fit grade of bottom flange.
6. Unless otherwise noted, bearings shall be placed normal to ℄ of stringer.
7. Plates are to be shipped as units.
8. If more than one size bearing is called for, Contractor may furnish all bearings of the larger size provided the bearing pads are altered to accommodate same. No increase in any prices bid will be allowed if this option is selected.
9. All anchor bolts and washers shall be unpainted ASTM F 1554 Grade 36 galvanized steel. All nuts shall be unpainted ASTM A 563 galvanized steel. All washers shall be unpainted ASTM Grade 36 galvanized steel.
10. The maximum design rotation due to strength load combinations (θu) = 0.75".

APPROVAL
E.S. Freedman DIRECTOR OFFICE OF STRUCTURES
DATE: 11/19/99

REVISIONS	
SHA	FHWA
1-21-09	
4-21-09	
2-19-13	
2-25-15	

FHWA APPROVAL
DATE: 7-19-11

STATE OF MARYLAND
DEPARTMENT OF TRANSPORTATION
STATE HIGHWAY ADMINISTRATION
OFFICE OF STRUCTURES

VERIFIED 10-9-2007 LRFD

FIXED BEARING
MEDIUM LENGTH SPANS
(GRADE 50 STEEL)

STANDARD NO. SUP-BR(SB)-103

SHEET 2 OF 3

SUPER - BEARINGS

OLD NO. BR-SS(9.06)-99-336(L)

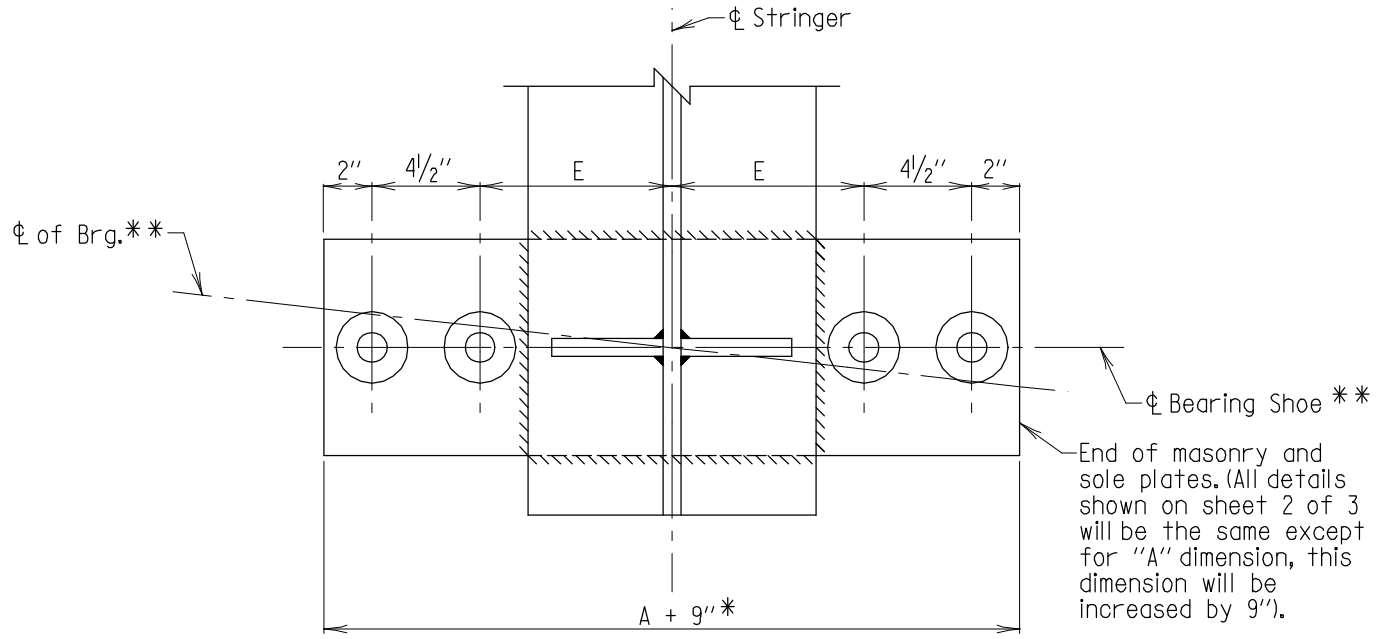

Note:
1. Nut not shown.
2. Pad and support not shown.

PLAN
FOR ALL GIRDERS WITH SPAN LENGTHS 150′ OR GREATER
Scale: 1½″ = 1′-0″

Note:
Bearings for girders 150′or greater shall be extended to accommodate 2 additional bolts. Size and details of all 4 anchor bolts to be the same as that required for 2 bolt bearings.

* Edges may be left as cut or cast.

** Where bridge is not skewed, ℄ Brg. and ℄ shoe are coincident.

APPROVAL	
R. S. Freedman DIRECTOR OFFICE OF STRUCTURES	
DATE: 11/19/99	
REVISIONS	
SHA	FHWA
10-9-07	
FHWA APPROVAL	
DATE: 7-19-11	

STATE OF MARYLAND
DEPARTMENT OF TRANSPORTATION
STATE HIGHWAY ADMINISTRATION
OFFICE OF STRUCTURES

VERIFIED 10-9-2007 LRFD

FIXED BEARING
MEDIUM LENGTH SPANS
(GRADE 50 STEEL)

STANDARD NO. SUP-BR(SB)-103 SHEET 3 OF 3

SUPER - BEARINGS

OLD NO. BR-SS(9.06)-99-336(L)

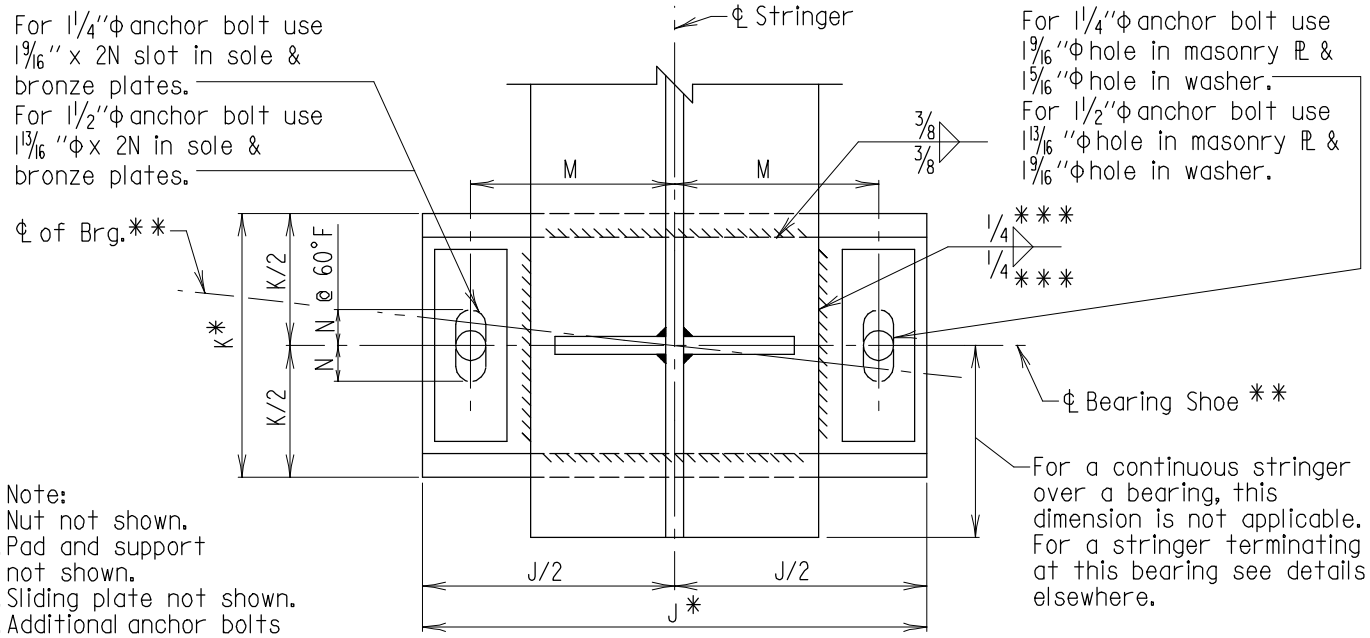

Note:
1. Nut not shown.
2. Pad and support not shown.
3. Sliding plate not shown.
4. Additional anchor bolts required for spans 150' or greater see sheet 3 of 3.

PLAN
Scale: 1½" = 1'-0"

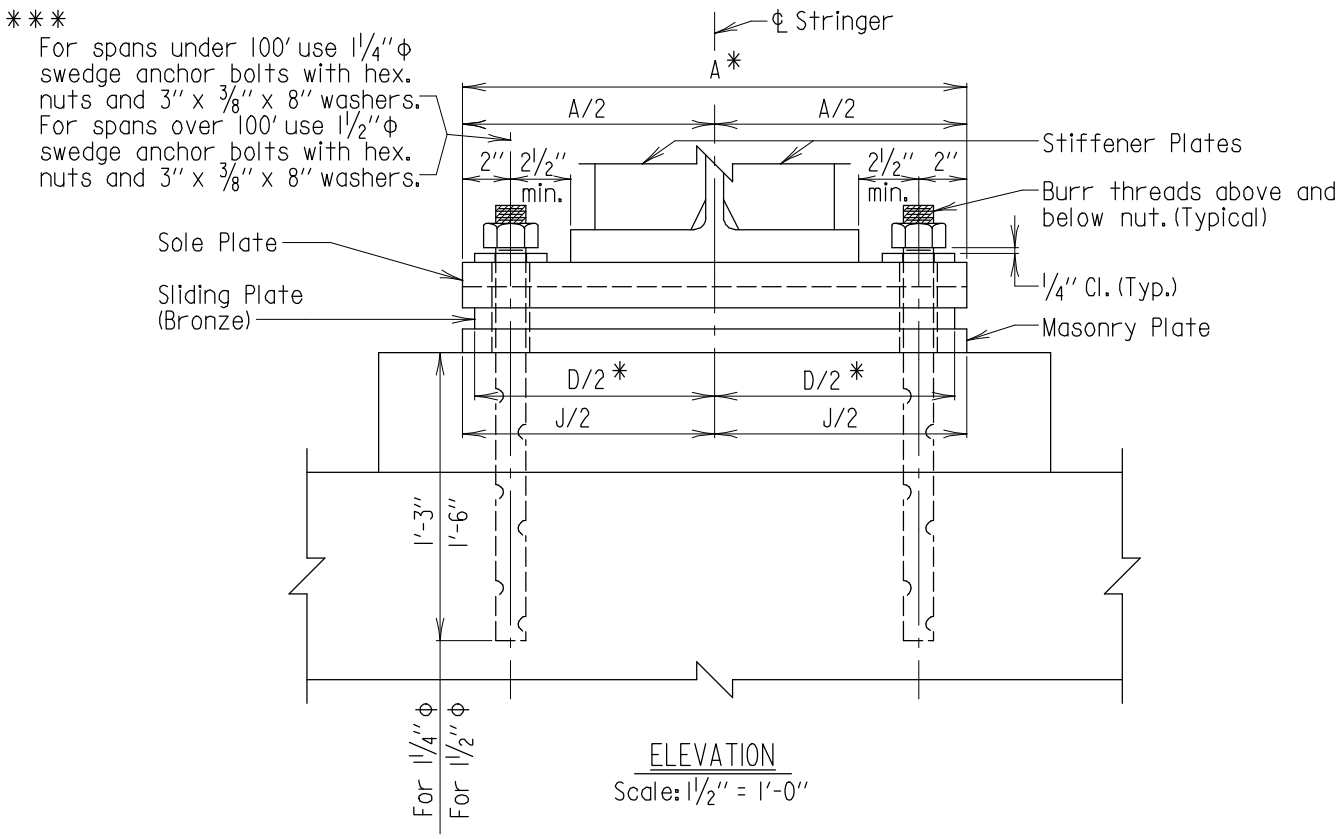

ELEVATION
Scale: 1½" = 1'-0"

* Edges may be left as cut or cast.

** Where bridge is not skewed, ℄ Brg. and ℄ shoe are coincident.

*** Minimums shown. Engineer Shall Design.

APPROVAL
R.S. Freedman DIRECTOR OFFICE OF STRUCTURES
DATE: 11/19/99

REVISIONS	
SHA	FHWA
7-26-06	
10-9-07	
1-21-09	
8-19-09	

FHWA APPROVAL
DATE: 7-19-11

STATE OF MARYLAND
DEPARTMENT OF TRANSPORTATION
STATE HIGHWAY ADMINISTRATION
OFFICE OF STRUCTURES

VERIFIED 10-9-2007 LRFD

BRONZE EXPANSION BEARING
MEDIUM LENGTH SPANS
(GRADE 50 STEEL)

STANDARD NO. SUP-BR(SB)-104 SHEET 1 OF 3

SUPER - BEARINGS

OLD NO. BR-SS(9.05)-99-335(L)

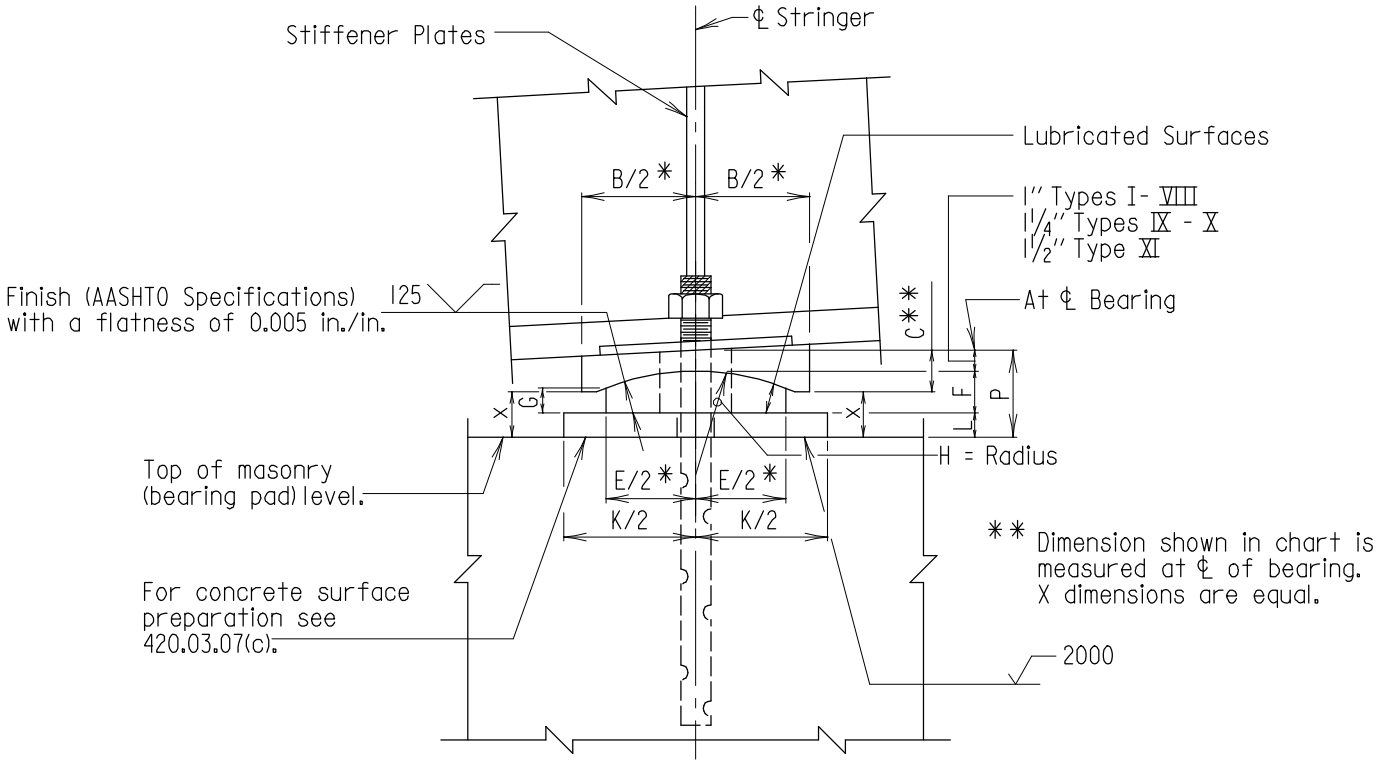

SIDE VIEW

Scale: 1 1/2" = 1'-0"

DATA SCHEDULE

Type	Sole Plate			Sliding Plate				Radius	Masonry ℙ			Hole Loc.		Hgt.	Max. Bottom Fl. W.	Strength Limits State Loads	Service Limit State Loads	Allow Exp. (+/-) (Note 4)
	A	B	C	D	E	F	G	H	J	K	L	M	N	P				
ME50 - I	21	9 1/2	1 3/4	20	7 1/2	1 3/4	1 ±	11	21	11	1	8 1/2	1 1/2	3 3/4	12	200 k	120 k	
ME50 - II	23	10 1/2	1 7/8	22	8 1/2	1 3/4	1 ±	12	23	12	1	9 1/2	1 3/4	3 3/4	14	300 k	185 k	1
ME50 - III	25	12 1/2	2	24	9 1/2	1 3/4	1 ±	15	25	13	1 1/4	10 1/2	2	4	16	400 k	250 k	1 1/4
ME50 - IV	27	13 1/2	2 1/8	26	11	2	1 ±	16	27	16	1 1/4	11 1/2	2 1/4	4 1/4	18	500 k	310 k	1 1/2
ME50 - V	29	15 1/2	2 3/8	28	13	2 1/4	1 ±	18	29	17	1 1/2	12 1/2	2 1/2	4 3/4	20	600 k	375 k	1 3/4
ME50 - VI	31	17	2 1/2	30	14 1/2	2 3/8	1 ±	20	31	20	1 1/2	13 1/2	2 3/4	4 7/8	22	700 k	440 k	2
ME50 - VII	33	18 1/2	2 1/2	32	15 1/2	2 3/8	1 ±	23	33	23	2	14 1/2	3	5 3/8	24	800 k	505 k	2 1/4
ME50 - VIII	35	19	2 5/8	34	16 1/2	2 1/2	1 ±	23	35	24	2 1/2	15 1/2	3 1/4	6	26	900 k	570 k	2 1/2
ME50 - IX	37	21	3	36	17 1/2	2 3/4	1 1/4 ±	26	37	25	2 1/2	16 1/2	3 1/2	6 1/2	28	1000 k	635 k	2 3/4
ME50 - X	39	21	3	38	17 1/2	2 3/4	1 1/4 ±	26	39	26	2 3/4	17 1/2	4	6 3/4	30	1100 k	700 k	3 1/4
ME50 - XI	41	22	3 1/4	40	18	3	1 1/2 ±	28	41	27	3	18 1/2	4 1/2	7 1/2	32	1200 k	760 k	3 3/4

Note: All dimensions are in inches.

Note:

1. Sole and masonry plates to be ASTM A 709 Grade 50, steel painted to match finished bridge color, convex plate shall be a self lubricating bronze bearing plate conforming to 910.01.
2. Fill slots and holes around anchor bolts with nonhardening caulking compound or elastic joint sealer.
3. 1000 RMS (Finish all over) except where otherwise noted.
4. Allowable expansion is based on a 60°F. temperature change from center slot setting at 60°F.
5. Compressive strength of concrete bearing area shall be 3.5 ksi or greater.
6. Top of sole plate must be beveled to fit grade of bottom flange.
7. Unless otherwise noted, bearings shall be placed normal to ℄ of stringer.
8. Plates are to be shipped as units.
9. If more than one size bearing is called for, Contractor may furnish all bearings of the larger size provided the bearing pads are altered to accommodate same. No increase in any prices bid will be allowed if this option is selected.
10. All anchor bolts and shall be unpainted ASTM F 1554 Grade 36 galvanized steel. All nuts shall be unpainted ASTM A 563 galvanized steel. All washers shall be unpainted ASTM Grade 36 galvanized steel.
11. The maximum design rotation due to strength load combinations (θu) = 0.75".

APPROVAL	
E.S. Freedman DIRECTOR OFFICE OF STRUCTURES	
DATE: 11/19/99	
REVISIONS	
SHA	FHWA
10-9-07	
1-21-09	
4-21-09	
2-19-13	
FHWA APPROVAL DATE: 7-19-11	

STATE OF MARYLAND
DEPARTMENT OF TRANSPORTATION
STATE HIGHWAY ADMINISTRATION
OFFICE OF STRUCTURES

VERIFIED 10-9-2007 LRFD

BRONZE EXPANSION BEARING
MEDIUM LENGTH SPANS
(GRADE 50 STEEL)

STANDARD NO. SUP-BR(SB)-104 SHEET 2 OF 3

SUPER - BEARINGS

OLD NO. BR-SS(9.05)-99-335(L)

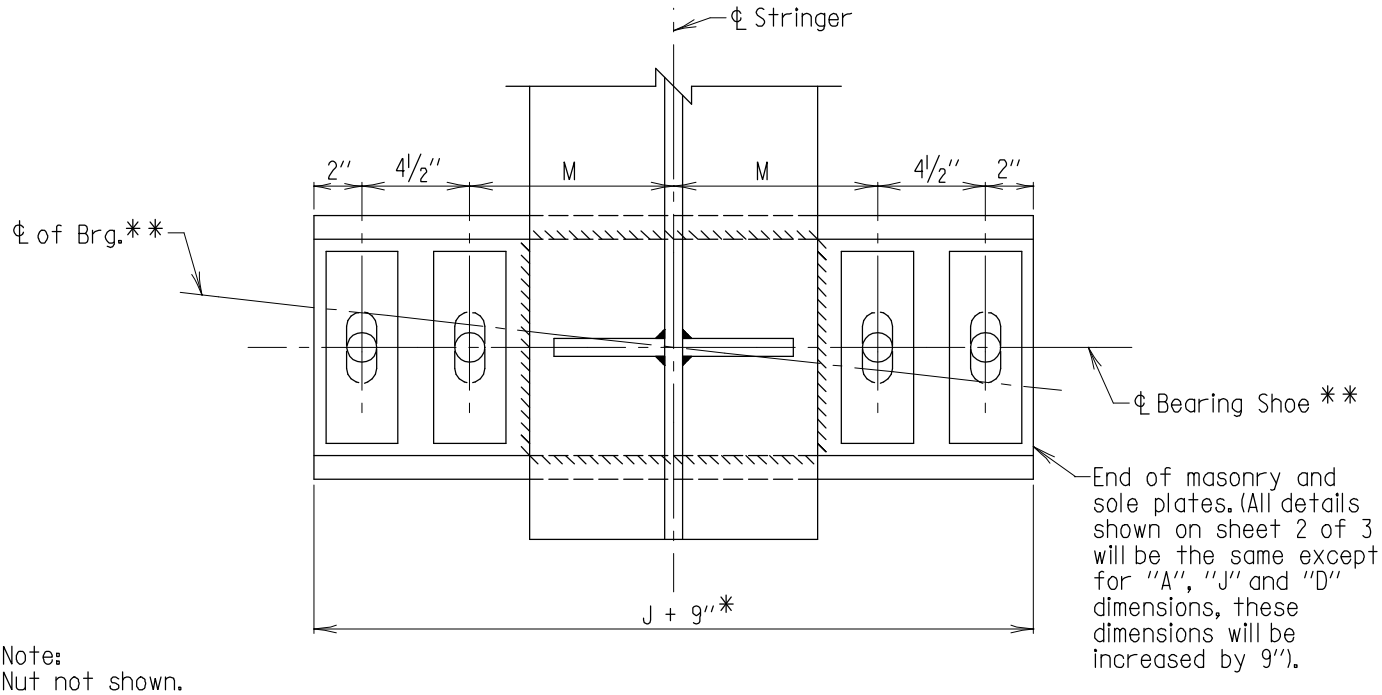

Note:
1. Nut not shown.
2. Pad and support not shown.
3. Sliding plate not shown.

PLAN
FOR ALL GIRDERS WITH SPAN LENGTHS 150′ OR GREATER
Scale: 1½″ = 1′-0″

Note:
Bearings for girders 150′ or greater shall be extended to accommodate 2 additional bolts. Size and details of all 4 anchor bolts to be the same as that required for 2 bolt bearings.

* Edges may be left as cut or cast.

** Where bridge is not skewed, ℄ Brg. and ℄ shoe are coincident.

APPROVAL	
R.S. Freedman DIRECTOR OFFICE OF STRUCTURES	
DATE: 11/19/99	
REVISIONS	
SHA	FHWA
10-9-07	

FHWA APPROVAL	
DATE: 7-19-11	

STATE OF MARYLAND
DEPARTMENT OF TRANSPORTATION
STATE HIGHWAY ADMINISTRATION
OFFICE OF STRUCTURES

VERIFIED 10-9-2007 LRFD

BRONZE EXPANSION BEARING
MEDIUM LENGTH SPANS
(GRADE 50 STEEL)

STANDARD NO. SUP-BR(SB)-104 SHEET 3 OF 3

SUPER - BEARINGS

OLD NO. BR-SS(9.05)-99-335(L)

SUPERSTRUCTURE

BEARINGS

ELASTOMERIC BEARINGS

(SUP-BR(EB))

GENERAL NOTES

1. Sole plates, masonry plates, keeper bars, embedded plates, studs and angles shall be A709 Grade 50 steel unpainted galvanized in accordance with ASTM A123. All areas that welding, cladding or vulcanizing is to occur shall be masked off prior to galvaninzing. Areas damaged by welding, cladding or vulcanizing shall be touched up in the field. All edges shall be cut or cast.

2. Fill slots and holes around anchor bolts with non-hardening caulking compound or elastic joint sealer.

3. 1000 µin R(a) (finish all over) except where otherwise noted on these standards or in the contract specifications.

4. Top of sole plate to be beveled to fit grade of roadway. Dimension "B" shall be measured at centerline bearing. Mark the thicker end of beveled sole plates to identify thicker end in field.

5. Bearings shall be placed normal to centerline of girder.

6. Bearings are designed for a construction uncertainty tolerance [AASHTO 14.4.2.1]. The tolerance is 2 times the actual rotation up to a maximum of .005 rad.

7. All anchor bolts, nuts and washers shall be unpainted galvanized in accordance with ASTM A123. Anchor bolts shall be ASTM F1554, Grade 36; nuts - ASTM A563, and washers - ASTM F436.

8. Refer to 430.03.31 for setting anchor bolts in masonry.

9. Elastomeric bearings shall be 60 durometer hardness.

10. Internal steel sheets shall be stainless steel meeting ASTM A240, Type 304.

11. All centerline of bearings and centerline of shoes are coincident.

12. Bearing shoes are to be shipped as units.

13. All concrete bearing areas shall meet the surface requirements of sunsection 420.03.07(C).

14. During field welding, the temperature of the steel adjacent to the elastomer or PTFE shall not exceed 200° F. Temperature shall be controlled by welding procedures and temperature indicating wax pens or other devices approved by the Engineer.

15. Polytetraflouroethylene (PTFE) self lubricating bearing elements shall be composed of 100 percent virgin (unfilled) polytetraflouroethylene (PTFE) polymer.

16. The surface of the stinless steel in contact with the PTFE shall have a surface finish less than 20 µin R(a) and be mirror finished. Material shall be ASTM A240 Type 304. The maximum coefficient of friction for the PTFE and bearing assembly shall be μ=0.08 at 68° F.

17. Expansion bearings are designed to first slip of the bearing assembly where friction force is computed as μ x max. dead load (μ=0.08).

18. For span lengths longer than 155' or locations with seismic coefficient As>0.05, the designer is responsible for designing bearings and anchor bolts.

Useable DRAFT

* USEABLE DRAFT *

APPROVAL	
_____ DIRECTOR OFFICE OF STRUCTURES	
DATE: 09/01/15	
REVISIONS	
SHA	FHWA
FHWA APPROVAL	
DATE:	

STATE OF MARYLAND
DEPARTMENT OF TRANSPORTATION
STATE HIGHWAY ADMINISTRATION
OFFICE OF STRUCTURES

BEARINGS FOR PRESTRESSED CONCRETE GIRDERS
GENERAL NOTES

NO. SUP-BR(EB)-101 SHEET 1 OF 1

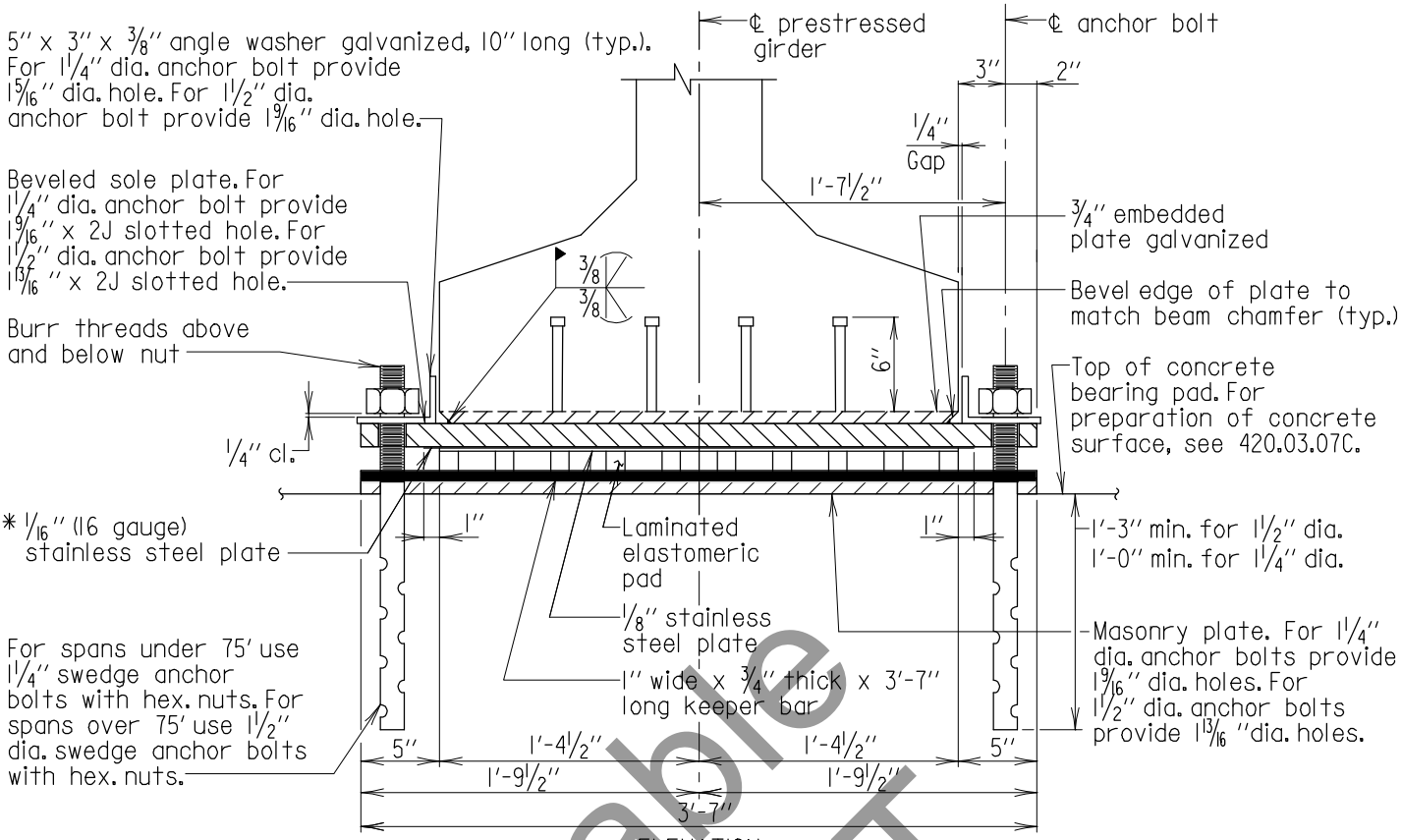

ELEVATION
Scale: 1" = 1'-0"

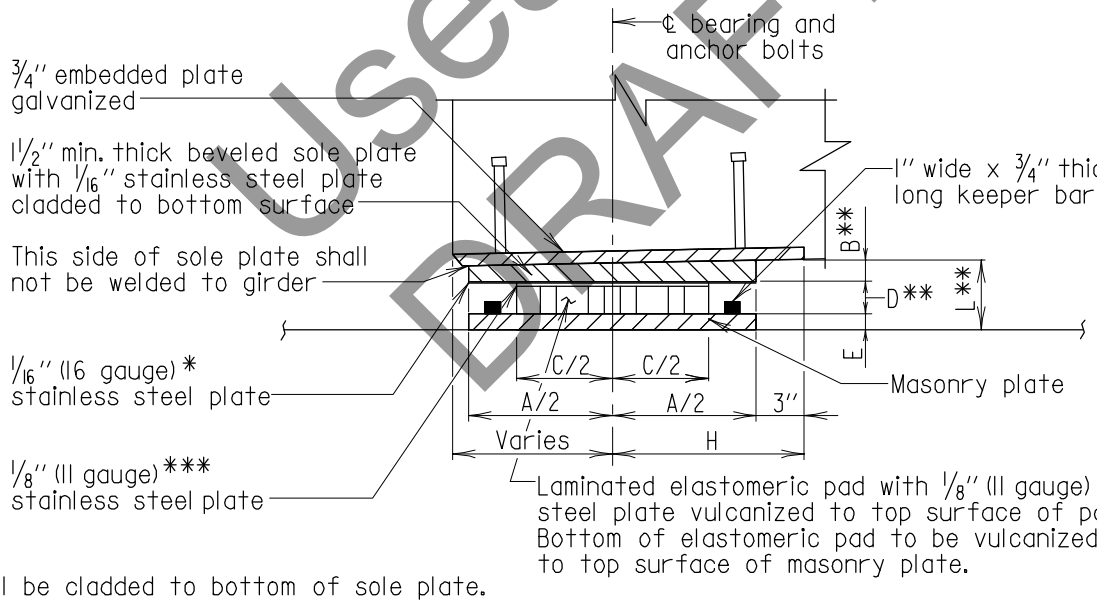

Useable DRAFT

* Shall be cladded to bottom of sole plate.

** Dimensions "B" and "D" do not include stainless steel plates or PTFE material. Dimension "L" includes all plates and PTFE material. If dimpled and lubricated PTFE is provided, Contractor shall adjust bearing pad elevations accordingly for bearing height difference and silicone grease shall comply with MIL-S-8660.

*** 3/32" PTFE material to be bonded to top of 1/8" stainless steel plate.

SIDE VIEW
Scale: 1" = 1'-0"

Note:
Anchor bolt not shown for clarity.

* USEABLE DRAFT *

APPROVAL	
_____ DIRECTOR OFFICE OF STRUCTURES	
DATE: 09/01/15	
REVISIONS	
SHA	FHWA
FHWA APPROVAL	
DATE:	

STATE OF MARYLAND
DEPARTMENT OF TRANSPORTATION
STATE HIGHWAY ADMINISTRATION
OFFICE OF STRUCTURES

EXPANSION BEARINGS FOR PCEF BULB TEE PRESTRESSED CONCRETE GIRDERS

NO. SUP-BR(EB)-102 SHEET 1 OF 3

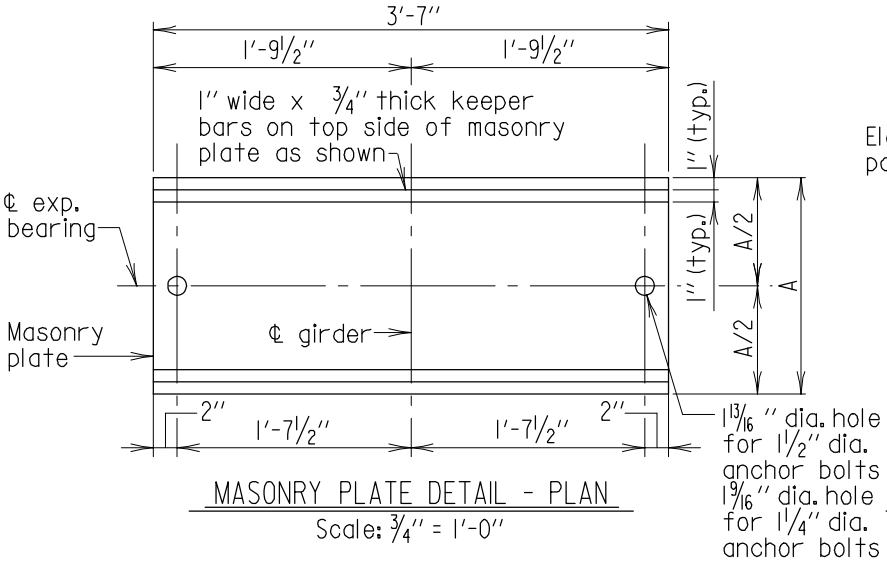

MASONRY PLATE DETAIL - PLAN

Scale: ¾" = 1'-0"

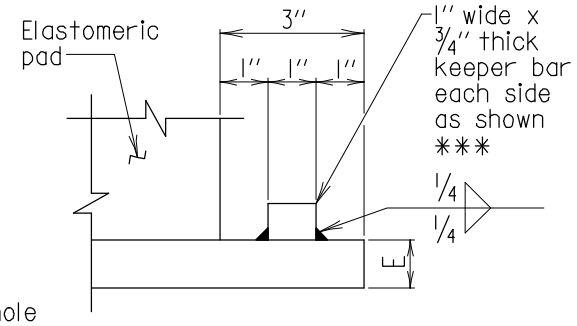

KEEPER BAR DETAIL - SIDE VIEW

Scale: 3" = 1'-0"

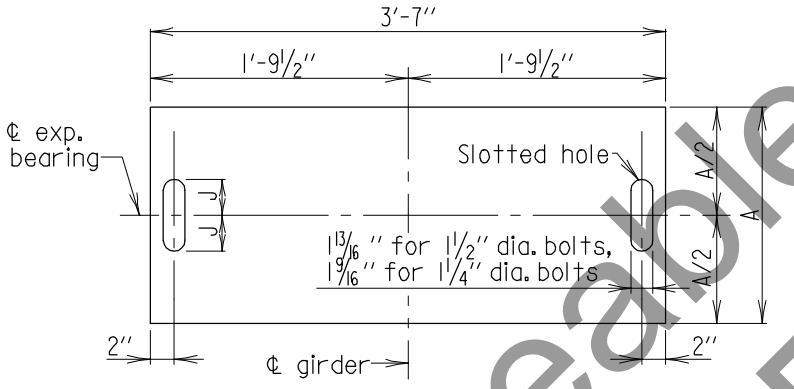

SLOTTED SOLE PLATE DETAIL - PLAN

Scale: ¾" = 1'-0"

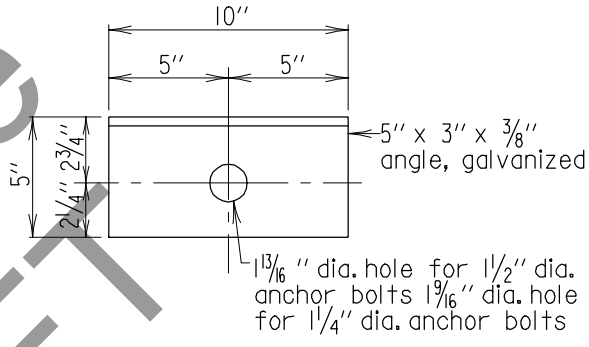

EXPANSION BEARING ANGLE WASHER - PLAN

Scale: 1½" = 1'-0"

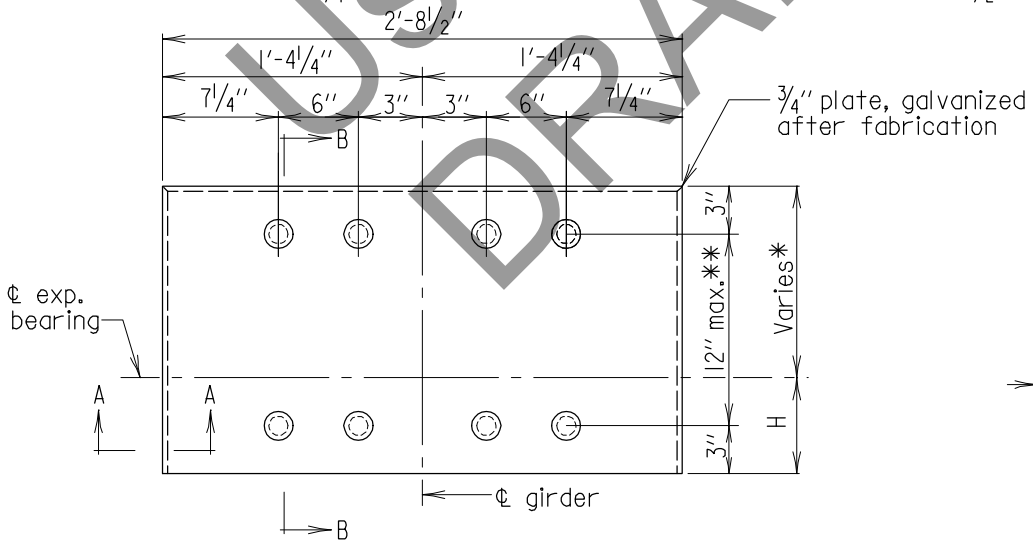

EMBEDDED PLATE DETAIL - PLAN

Scale: 1" = 1'-0"

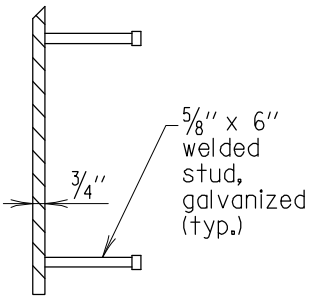

SECTION B-B

Scale: 1" = 1'-0"

Note:
Place studs normal to embedded plates.

* See girder elevation for dimension.

** Provide additional row(s) of studs for spacing larger than 12".

*** Keeper bar may be shop welded or milled from a thicker sole plate.

* USEABLE DRAFT *

APPROVAL	
_____ DIRECTOR OFFICE OF STRUCTURES	
DATE: 09/01/15	
REVISIONS	
SHA	FHWA
FHWA APPROVAL	
DATE:	

STATE OF MARYLAND
DEPARTMENT OF TRANSPORTATION
STATE HIGHWAY ADMINISTRATION
OFFICE OF STRUCTURES

EXPANSION BEARINGS FOR PCEF BULB TEE PRESTRESSED CONCRETE GIRDERS

NO. SUP-BR(EB)-102 SHEET 2 OF 3

Useable DRAFT

DATA SCHEDULE										
Type	Sole Plate		Elastomeric Pad		Elastomeric layers		Embedded plate	Slotted hole	Hgt.	Masonry plate
	A	B	C	D	F	G	H	J	L	E
PBE-I	11 1/2	1 3/4	5 1/2	1 3/4	7/16	3	8 3/4	3	5 1/16	1 1/4
PBE-II	12	1 3/4	6	1 3/4	7/16	3	9	3	5 1/16	1 1/4
PBE-III	13	1 3/4	7	1 3/4	7/16	3	9 1/2	3	5 1/16	1 1/4
PBE-IV	13 1/2	2	7 1/2	2 5/16	7/16	4	9 3/4	3 1/2	6 1/8	1 1/2
PBE-V	14	2	8	2 5/16	7/16	4	10	3 1/2	6 1/8	1 1/2
PBE-VI	15	2	9	2 5/16	7/16	4	10 1/2	3 1/2	6 1/8	1 1/2
PBE-VII	16	2	10	2 7/8	7/16	5	11	3 1/2	6 11/16	1 1/2

DATA SCHEDULE (cont'd)								
Type	Anchor bolt	Vertical Loads (Kips)			Thermal expansion	Rotation	PTFE Area (in^2)	PTFE Max. DL Stress (ksi)
		Dead+Live (Max.)	Dead (Max.)	Dead (Min.)	±	(radians)		
PBE-I	1 1/4	135	50	20	2 1/4	0.002	181.5	0.275
PBE-II	1 1/4	180	80	30	2 1/4	0.003	198	0.404
PBE-III	1 1/4	205	95	35	2 1/4	0.004	231	0.411
PBE-IV	1 1/2	250	130	45	2 5/8	0.004	247.5	0.525
PBE-V	1 1/2	290	160	60	2 5/8	0.005	264	0.606
PBE-VI	1 1/2	340	200	120	2 5/8	0.005	297	0.673
PBE-VII	1 1/2	390	240	190	2 5/8	0.006	330	0.727

Notes: 1. All dimensions are in inches unless otherwise noted.
2. All loads are load combination Service I.

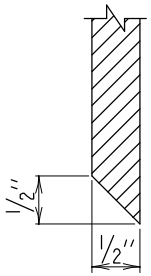

SECTION A-A
Scale: None

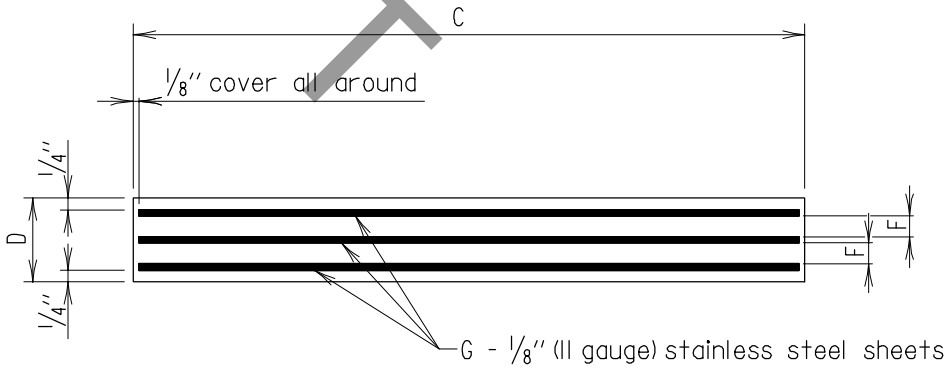

SIDE VIEW SECTION LAMINATED ELASTOMERIC BEARING PAD
Scale: 3" = 1'-0"

Usable DRAFT

FHWA APPROVAL
DATE:

APPROVAL
DIRECTOR OFFICE OF STRUCTURES
DATE: 09/01/15

REVISIONS
SHA
FHWA

STATE OF MARYLAND
DEPARTMENT OF TRANSPORTATION
STATE HIGHWAY ADMINISTRATION
OFFICE OF STRUCTURES

EXPANSION BEARINGS FOR PCEF BULB TEE PRESTRESSED CONCRETE GIRDERS

NO. SUP-BR(EB)-102

SHEET 3 OF 3

* USEABLE DRAFT *

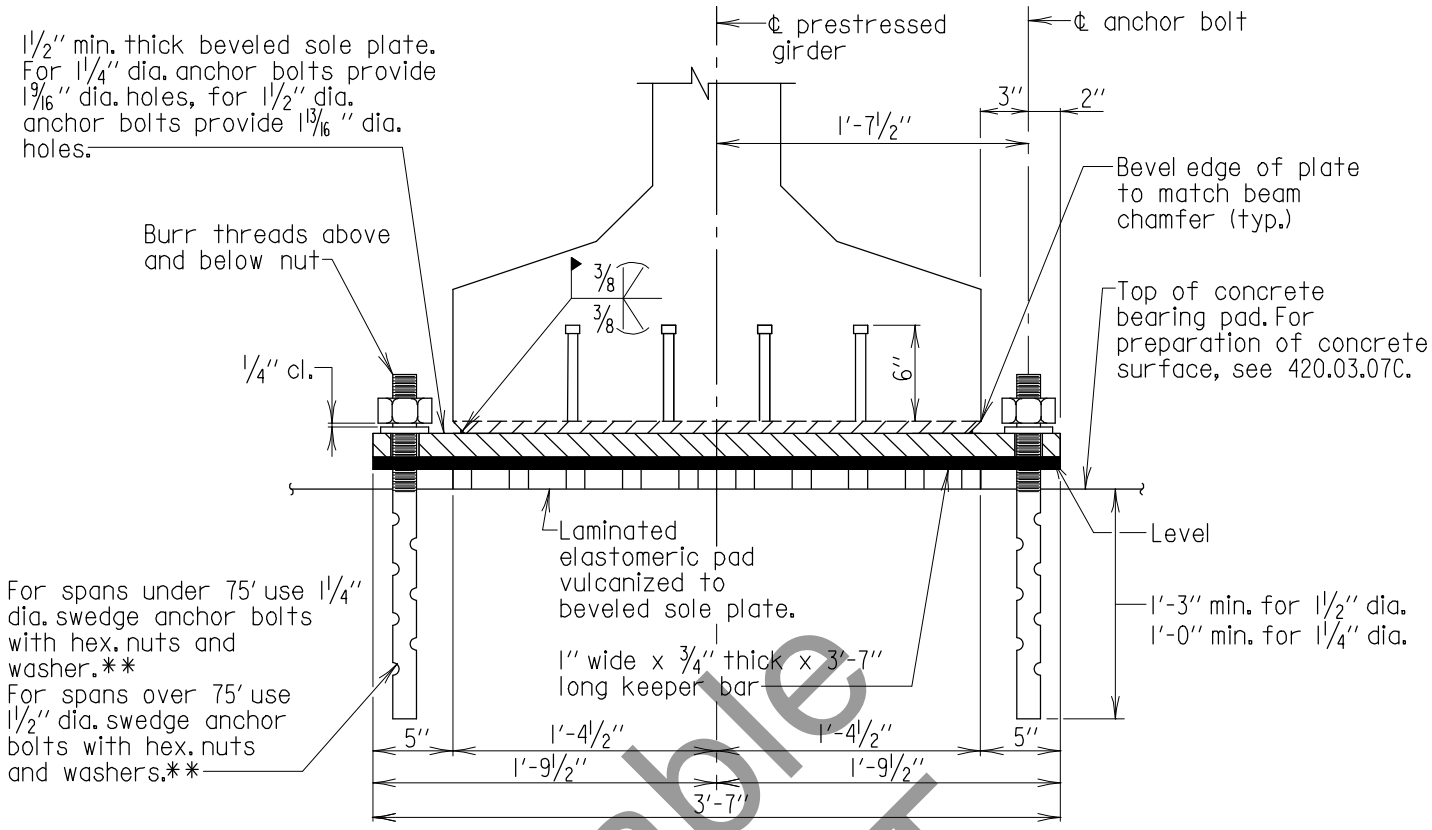

ELEVATION

Scale: 1" = 1'-0"

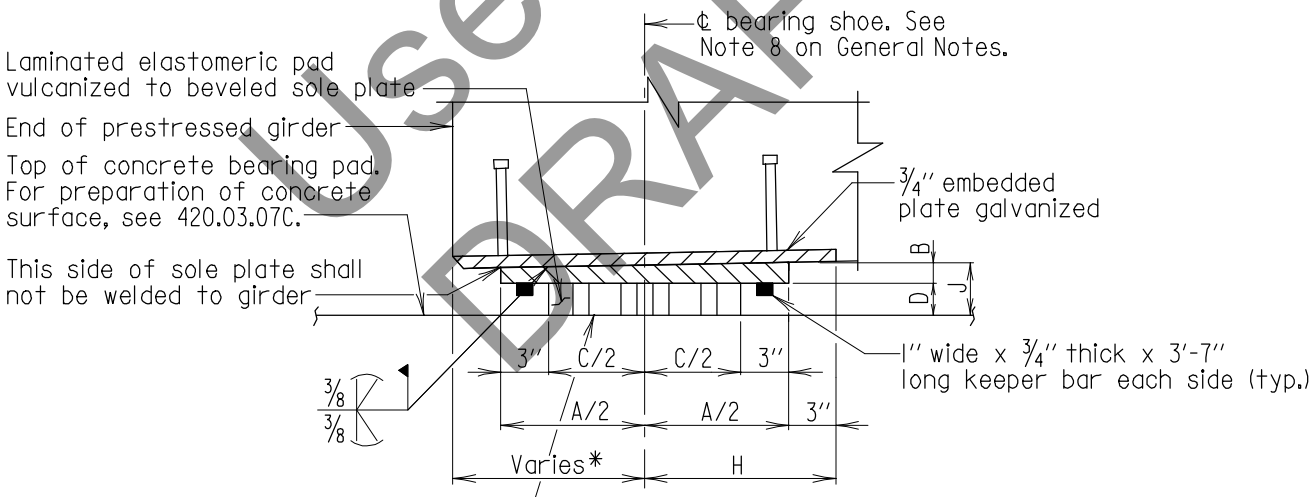

Note:
Anchor bolt not shown for clarity.

SIDE VIEW

Scale: 1" = 1'-0"

Useable DRAFT

* USEABLE DRAFT *

* See girder elevation for details.
** Washers shall be ASTM F436.

APPROVAL	
_____ DIRECTOR OFFICE OF STRUCTURES	
DATE: 09/01/15	
REVISIONS	
SHA	FHWA

FHWA APPROVAL	
DATE:	

STATE OF MARYLAND
DEPARTMENT OF TRANSPORTATION
STATE HIGHWAY ADMINISTRATION
OFFICE OF STRUCTURES

FIXED BEARINGS FOR PCEF BULB TEE PRESTRESSED CONCRETE GIRDERS

NO. SUP-BR(EB)-103 SHEET 1 OF 3

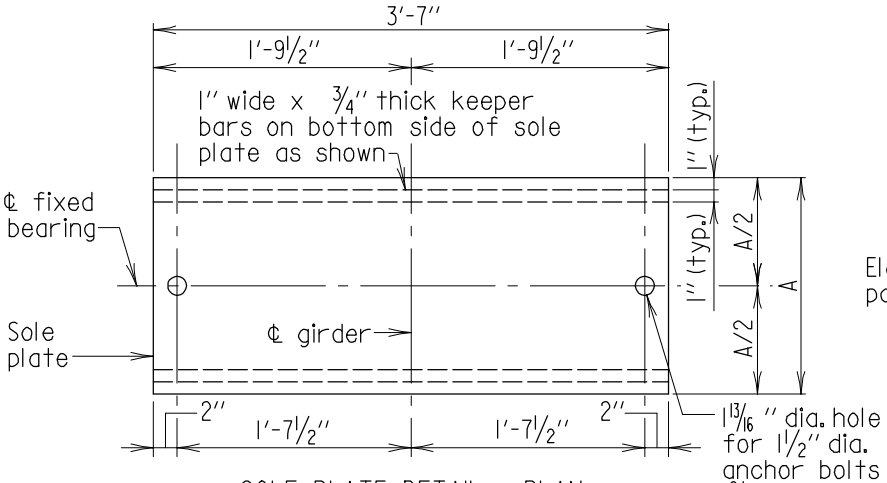

SOLE PLATE DETAIL - PLAN

Scale: 1½" = 1'-0"

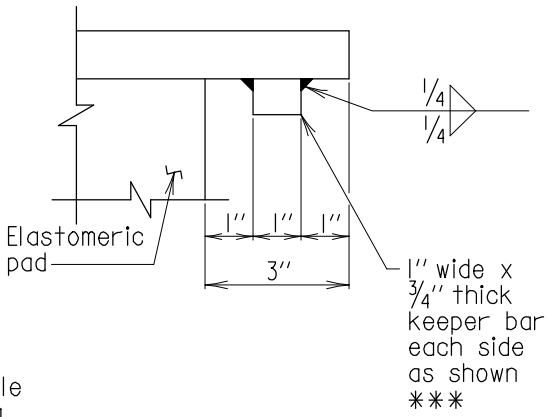

KEEPER BAR DETAIL - SIDE VIEW

Scale: 1½" = 1'-0"

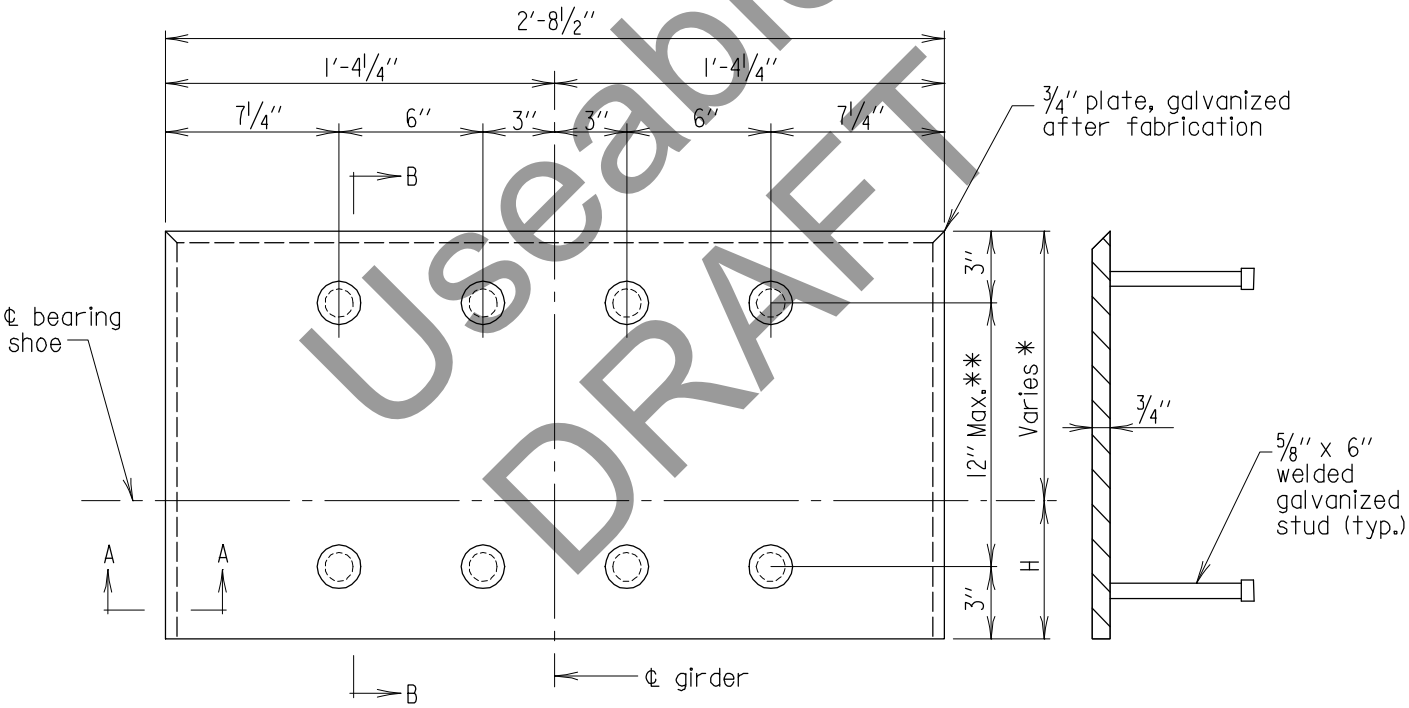

EMBEDDED PLATE DETAIL - PLAN

Scale: 1½" = 1'-0"

SECTION B-B

Scale: 1½" = 1'-0"

Useable DRAFT

Note:
Place studs normal to embedded plates.

*See girder elevation for dimension.

**Provide additional row(s) of studs for spacing larger than 12".

***Keeper bar may be shop welded or milled from a thicker sole plate.

* USEABLE DRAFT *

APPROVAL	
_____ DIRECTOR OFFICE OF STRUCTURES	
DATE: 09/01/15	
REVISIONS	
SHA	FHWA
FHWA APPROVAL	
DATE:	

STATE OF MARYLAND
DEPARTMENT OF TRANSPORTATION
STATE HIGHWAY ADMINISTRATION
OFFICE OF STRUCTURES

FIXED BEARINGS FOR PCEF BULB TEE PRESTRESSED CONCRETE GIRDERS

NO. SUP-BR(EB)-103 SHEET 2 OF 3

DATA SCHEDULE													
Type	Sole Plate		Elastomeric Pad		Elastomeric layers		Embedded plate	Hgt.	Anchor Bolt	Vertical Loads (Kips)			Rotation
	A	B	C	D	F	G	H	L		Dead+Live (Max.)	Dead (Max.)	Dead (Min.)	(radians)
PBF-I	11 1/2	1 3/4	5 1/2	1 3/4	7/16	3	8 3/4	3 1/2	1 1/4	135	50	20	0.002
PBF-II	12	1 3/4	6	1 3/4	7/16	3	9	3 1/2	1 1/4	180	80	30	0.003
PBF-III	13	1 3/4	7	1 3/4	7/16	3	9 1/2	3 1/2	1 1/4	205	95	35	0.004
PBF-IV	13 1/2	2	7 1/2	2 5/16	7/16	4	9 3/4	4 5/16	1 1/2	250	130	45	0.004
PBF-V	14	2	8	2 5/16	7/16	4	10	4 5/16	1 1/2	290	160	60	0.005
PBF-VI	15	2	9	2 5/16	7/16	4	10 1/2	4 5/16	1 1/2	340	200	120	0.005
PBF-VII	16	2	10	2 7/8	7/16	5	11	4 7/8	1 1/2	390	240	190	0.006

Notes: 1. All dimensions are in inches unless otherwise noted.
2. All loads are load combination Sevice I.

Useable DRAFT

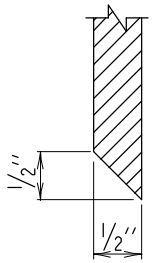

SECTION A-A
Scale: None

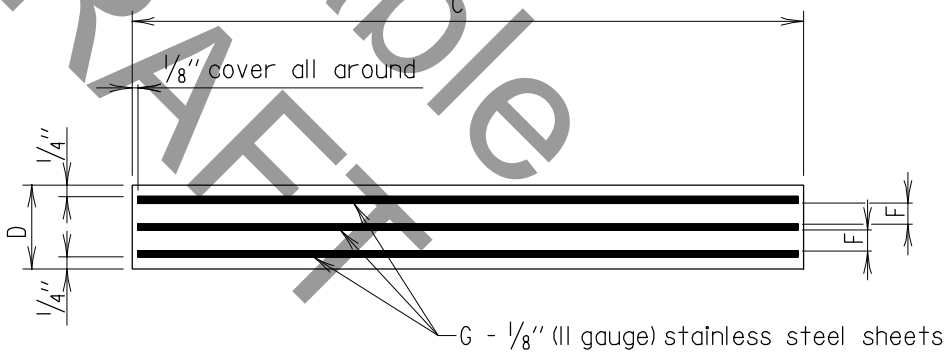

SIDE VIEW SECTION LAMINATED ELASTOMERIC BEARING PAD
Scale: 3'' = 1'-0''

FHWA APPROVAL
DATE:

APPROVAL
DIRECTOR
OFFICE OF STRUCTURES
DATE: 09/01/15

REVISIONS
SHA
FHWA

STATE OF MARYLAND
DEPARTMENT OF TRANSPORTATION
STATE HIGHWAY ADMINISTRATION
OFFICE OF STRUCTURES

FIXED BEARINGS FOR PCEF BULB TEE
PRESTRESSED CONCRETE GIRDERS

NO. SUP-BR(EB)-103

SHEET 3 OF 3

* USEABLE DRAFT *

SUPERSTRUCTURE

SCUPPERS

(SUP-SC)

GENERAL NOTES

Specifications:	Latest S.H.A. Specifications and Special Provisions for materials and construction. Latest AASHTO Standard Specifications for Highway Bridges for design.
Materials:	Scuppers shall be fiberglass conforming to 921.11. Gratings and 3/16" bands to be structural steel conforming to ASTM A 709 Grade 36, and epoxy coated. Elastomeric pad shall conform to 910.02 using 60 Durometer hardness. Stainless steel bolts shall conform to ASTM A 193, Identification Symbol B 8 Type 304.
Epoxy Bonding Compound:	All fiberglass that will be in contact with elastomeric material shall be coated with epoxy bonding compound conforming to 921.04.
Epoxy Coating:	All steel angles and additional #5 bars shall be epoxy coated as specified in 917.02 except that the color shall match Federal Test Method 595, Color No. 26440.
Measurement and Payment:	The furnishing, fabricating, erecting, etc. of all new scuppers for the bridge, complete in place, will be measured and paid for at the Contract unit price per each for Scupper item regardless of the length of the downspouts, etc. If no specific item appears in the Invitation for Bids for the Scupper then the cost shall be included in the pertinent Superstructure Concrete item.

APPROVAL		
R.S. Freedman DIRECTOR OFFICE OF STRUCTURES DATE: 7/25/80		
REVISIONS		
SHA	FHWA	
4-10-86	6-8-90	
12-27-93		
2-7-94		
1-22-01		

FHWA APPROVAL
DATE: 6-8-90

STATE OF MARYLAND
DEPARTMENT OF TRANSPORTATION
STATE HIGHWAY ADMINISTRATION
OFFICE OF STRUCTURES

TYPE I BRIDGE SCUPPER

STANDARD NO. SUP-SC-101 SHEET 1 OF 4

SUPER - SCUPPERS

OLD NO. BR-SS(0.03)-80-112

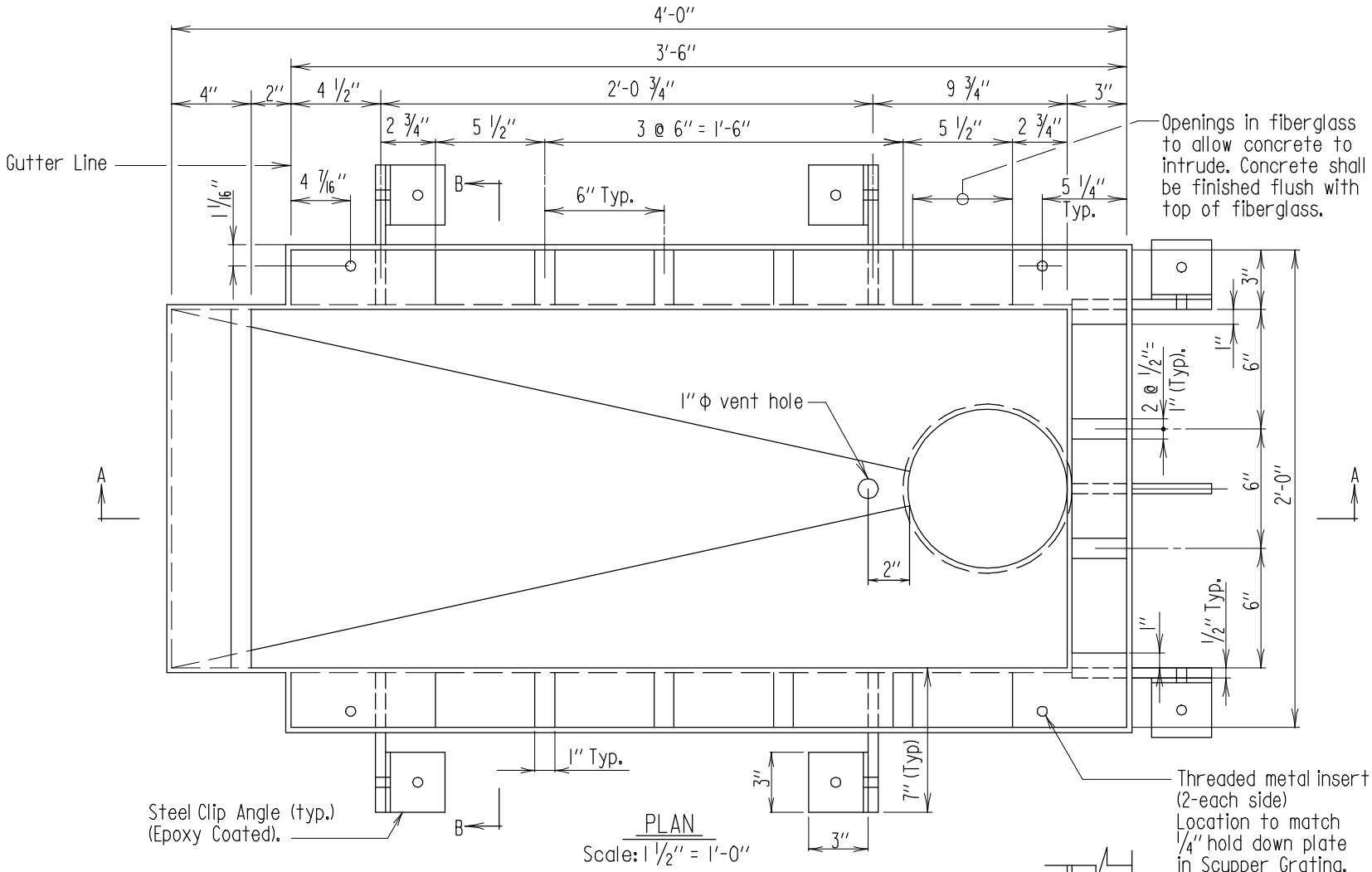

PLAN

Scale: 1 1/2" = 1'-0"

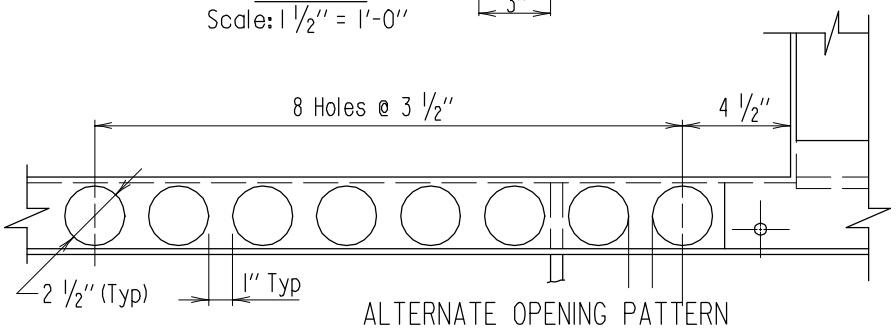

ALTERNATE OPENING PATTERN
TO ALLOW CONCRETE TO INTRUDE

Scale: 1 1/2" = 1'-0"

Note:

1. Wood forms may be used in the area of the scupper, as approved by the Engineer.
2. There must be a minimum of 5" of concrete under entire scupper area, with a mat of rebars equivalent in size and spacing to normal bottom mat pattern of deck. This may require the lowering of the deck in this area.
3. Fabricator may select either hole pattern - rectangular or circular.

APPROVAL	
OFFICE OF STRUCTURES DIRECTOR	
DATE: 7/25/77	
REVISIONS	
SHA	10-27-92
	5-20-94
	7-15-94
FHWA	1-22-01

FHWA APPROVAL
DATE: 6-8-90

STATE OF MARYLAND
DEPARTMENT OF TRANSPORTATION
STATE HIGHWAY ADMINISTRATION
OFFICE OF STRUCTURES

TYPE I BRIDGE SCUPPER

STANDARD NO. SUP-SC-101

SHEET 2 OF 4

OLD NO. BR-SS(0.03)-80-112

SUPER-SCUPPERS

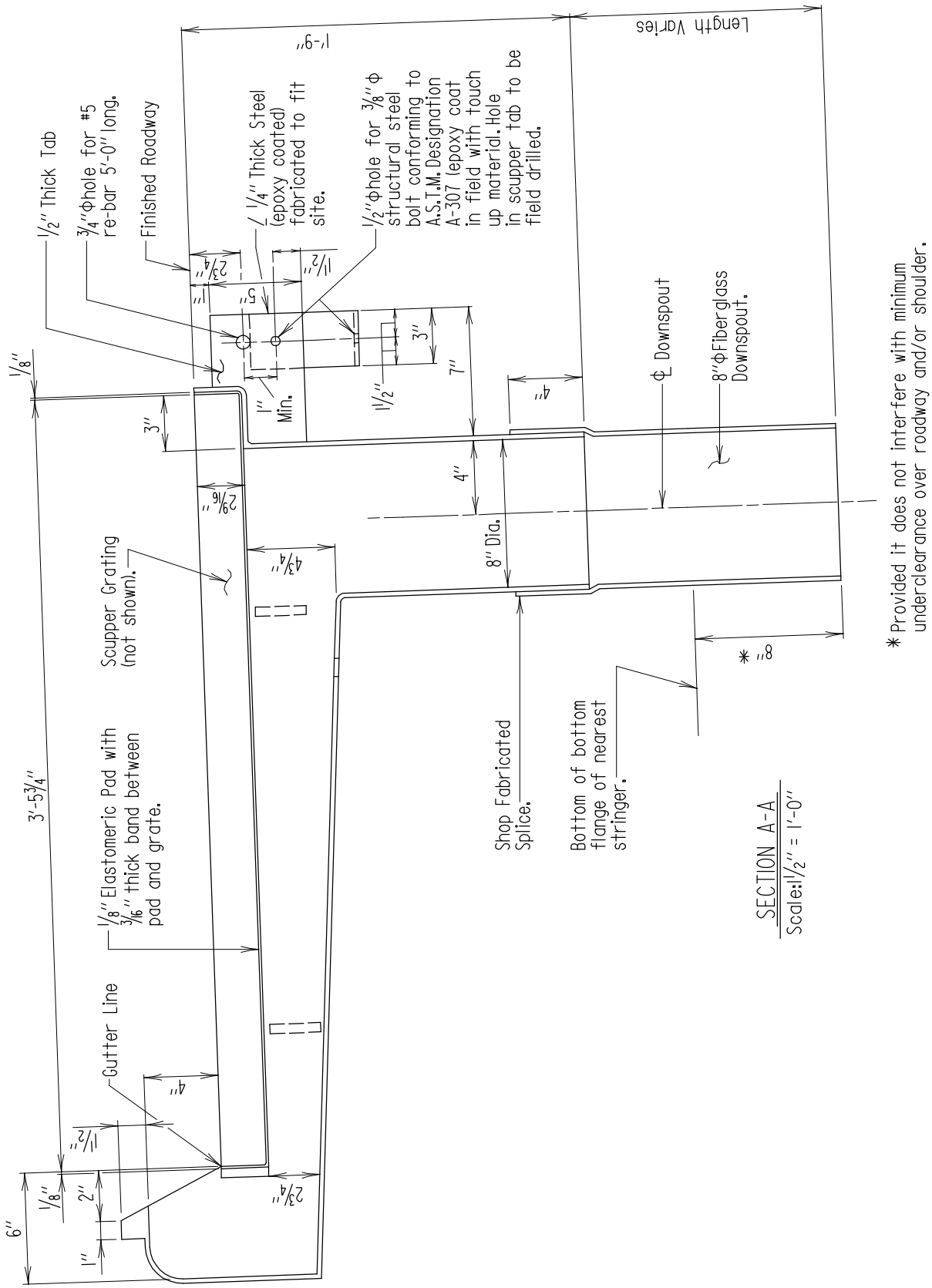

APPROVAL	
R.S. Freedman DIRECTOR OFFICE OF STRUCTURES	
DATE: 7/25/80	
REVISIONS	
SHA	FHWA
8-24-81	6-8-90
5-31-83	6-8-90
1-7-93	

FHWA APPROVAL
DATE: 6-8-90

STATE OF MARYLAND
DEPARTMENT OF TRANSPORTATION
STATE HIGHWAY ADMINISTRATION
OFFICE OF STRUCTURES

TYPE I BRIDGE SCUPPER

STANDARD NO. SUP-SC-101

SHEET 3 OF 4

SUPER - SCUPPERS

OLD NO. BR-SS(0.03)-80-112

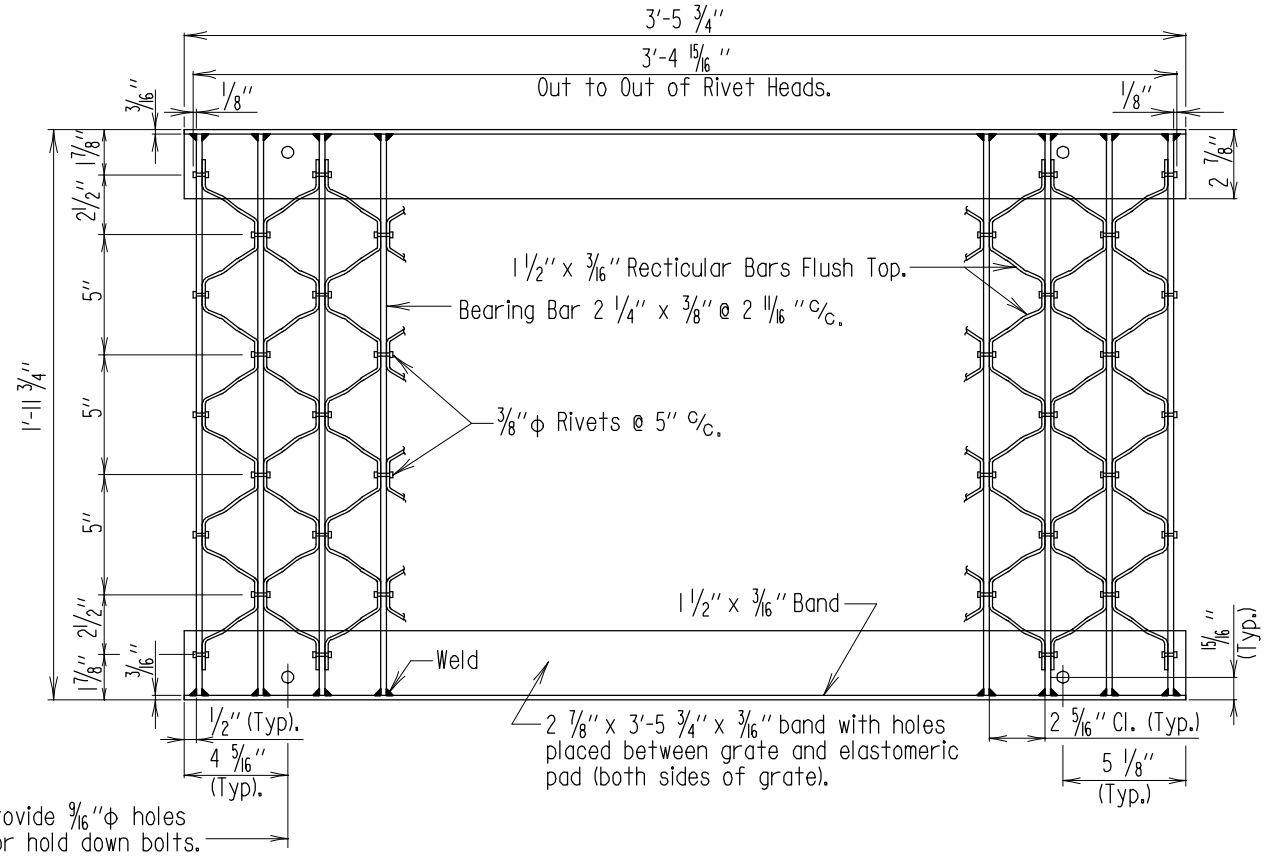

PLAN - SCUPPER GRATING

Scale: 1 1/2" = 1'-0"

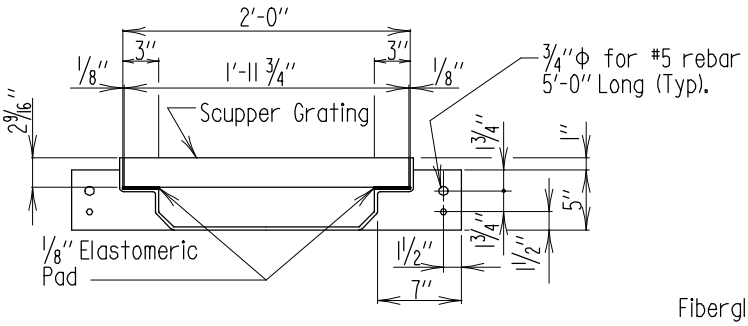

SECTION B-B

Scale: 3/4" = 1'-0"

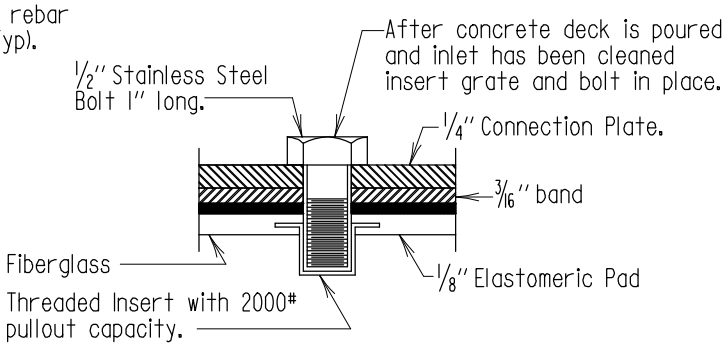

DETAIL "A"

Scale: None

APPROVAL		
E.S. Freedman DIRECTOR OFFICE OF STRUCTURES DATE: 7/25/80		
REVISIONS		
	SHA	FHWA
	11-10-81	6-8-90
	6-1-83	6-8-90
FHWA APPROVAL	1-7-93	
DATE: 6-8-90	1-22-01	

STATE OF MARYLAND
DEPARTMENT OF TRANSPORTATION
STATE HIGHWAY ADMINISTRATION
OFFICE OF STRUCTURES

TYPE I BRIDGE SCUPPER

STANDARD NO. SUP-SC-101

SHEET 4 OF 4

SUPER - SCUPPERS

OLD NO. BR-SS(0.03)-80-112

GENERAL NOTES

Specifications: Latest S.H.A. Specifications and Special Provisions for materials and construction. Latest AASHTO Standard Specifications for Highway Bridges for design.

Materials: Scuppers shall be grey cast iron, conforming to ASTM A 48 Class 30 B.

Gratings shall be structural steel conforming to ASTM A 709 Grade 36 and epoxy coated.

Stainless steel bolts shall conform to ASTM A 193, Identification Symbol B8, Type 304.

Paint: Scuppers shall be painted with one shop coat inside and outside. Shop paint shall conform to 912.02.01. Insides of scuppers to be painted with one coat of coal tar epoxy SSPC-Paint 16. Vertical showing surface in curb face and horizontal showing surface in roadway to be painted with the second and finish coats specified in 912.16, System E. Outside of scuppers exposed to atmosphere below the concrete deck slab, shall receive the field paint required for structural steel. If there is no paint indicated, the scupper shall be painted to match color of existing beam.

Shipping: Grate and Scupper shall be shipped as unit with grate hold down bolts in place (not welded).

Measurement and Payment: The furnishing, fabricating, erecting, etc. of all new scuppers for the bridge will be measured and paid for at the Contract unit price per each for the Scupper item regardless of length of downspouts, etc. If no specific items appear in the Invitation for Bids, the cost shall be included in the pertinent Superstructure Concrete item.

APPROVAL		
E.S. Freedman DIRECTOR OFFICE OF STRUCTURES DATE: 8/24/81		
REVISIONS		
SHA	FHWA	
7-18-83	6-8-90	
11-12-87	6-8-90	
12-27-93		
1-22-01		

FHWA APPROVAL DATE: 6-8-90

STATE OF MARYLAND
DEPARTMENT OF TRANSPORTATION
STATE HIGHWAY ADMINISTRATION
OFFICE OF STRUCTURES

TYPE IA BRIDGE SCUPPER

STANDARD NO. SUP-SC-102 SHEET 1 OF 4

SUPER-SCUPPERS

OLD NO. BR-SS(0.04)-81-130

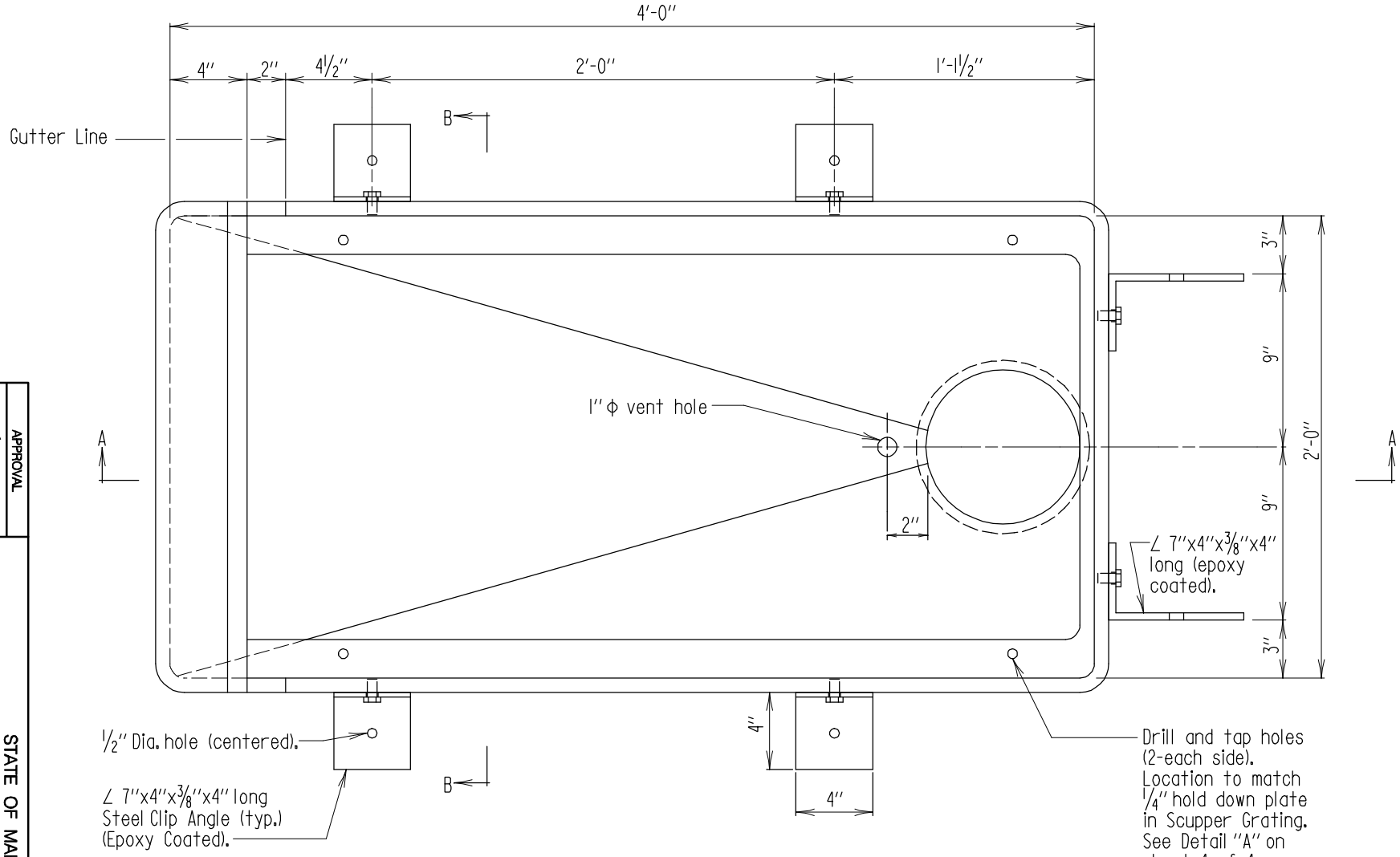

PLAN
Scale: 1 1/2" = 1'-0"

Note:
1. Wood forms may be used in the area of the scupper, as approved by the Engineer.
2. There must be a minimum of 5" of concrete under entire scupper area, with a mat of rebars equivalent in size and spacing to normal bottom mat pattern of deck. This may require the lowering of the deck in this area.

APPROVAL
DIRECTOR
OFFICE OF STRUCTURES
DATE: 8/24/81

REVISIONS

SHA	FHWA
7-1-83	6-8-90
1-7-93	
5-20-94	
1-22-01	

FHWA APPROVAL
DATE: 6-8-90

STATE OF MARYLAND
DEPARTMENT OF TRANSPORTATION
STATE HIGHWAY ADMINISTRATION
OFFICE OF STRUCTURES

TYPE IA BRIDGE SCUPPER

STANDARD NO. SUP-SC-102

SHEET 2 OF 4

OLD NO. BR-SS(0.04)-81-130

SUPER-SCUPPERS

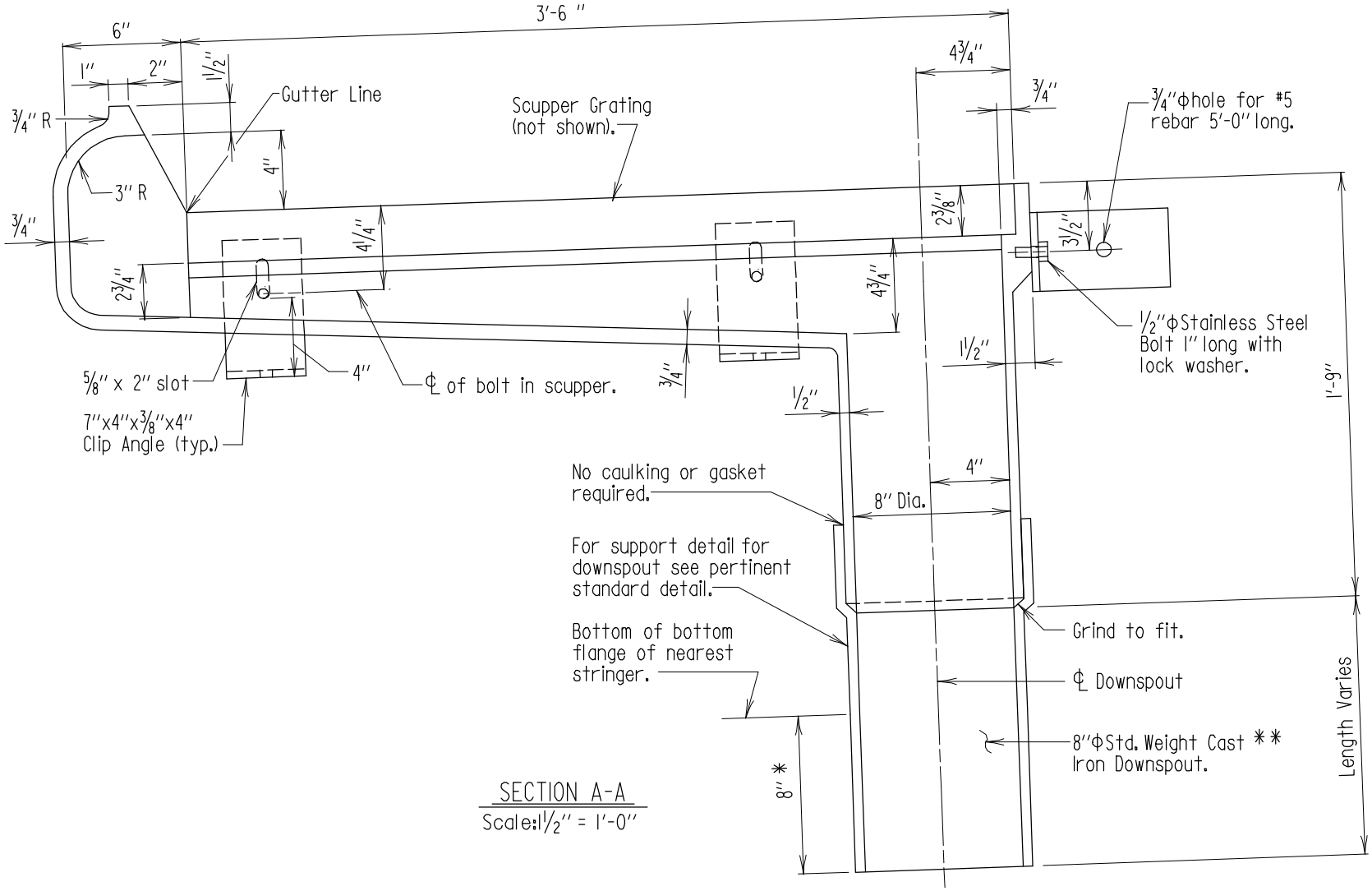

SECTION A-A

Scale: 1 1/2" = 1'-0"

* Provided it does not interfere with minimum underclearance over roadway and/or shoulder.

** The downspout may be fiberglass. Color shall match finished bridge paint color. No additional compensation will be allowed for whichever option is chosen.

APPROVAL	
E.S. Freeman DIRECTOR OFFICE OF STRUCTURES	
DATE: 8/24/81	
REVISIONS	
SHA	FHWA
1-7-93	5-12-93
1-22-01	7-14-08

FHWA APPROVAL
DATE: 6-8-90

STATE OF MARYLAND
DEPARTMENT OF TRANSPORTATION
STATE HIGHWAY ADMINISTRATION
OFFICE OF STRUCTURES

TYPE IA BRIDGE SCUPPER

STANDARD NO. SUP-SC-102

SHEET 3 OF 4

OLD NO. BR-SS(0.04)-81-130

SUPER-SCUPPERS

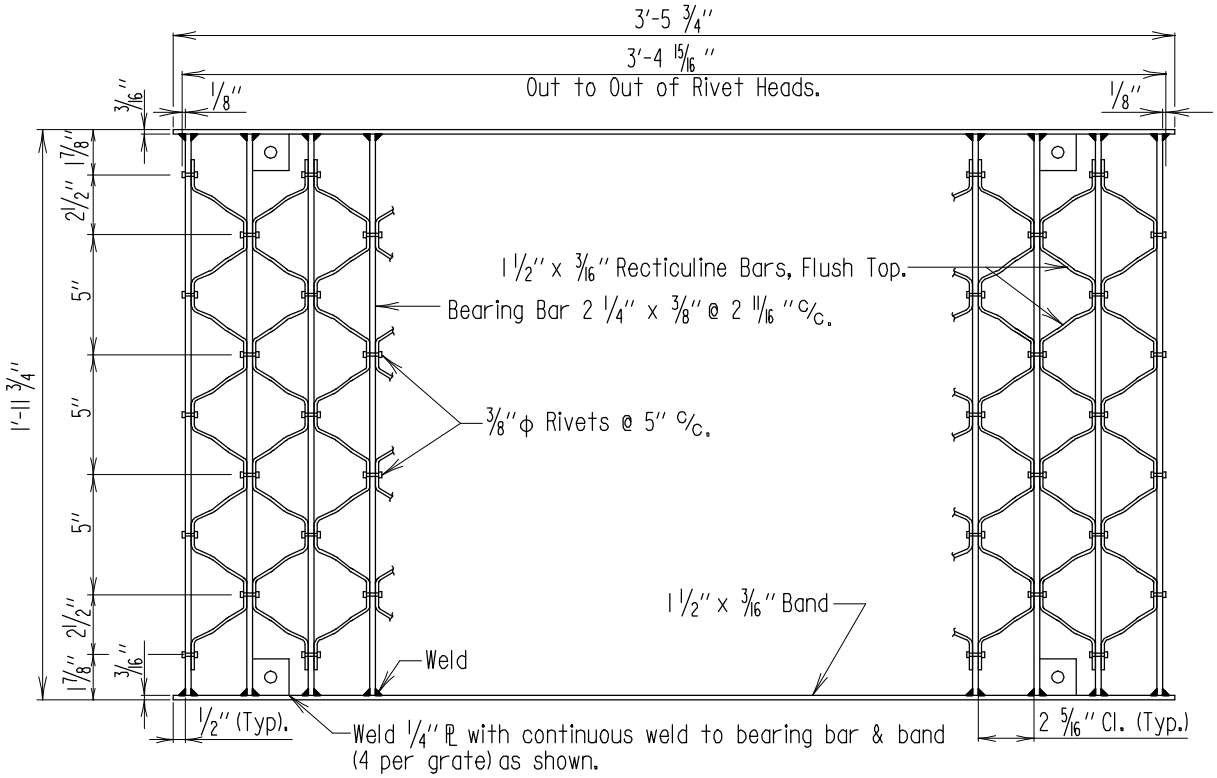

PLAN - SCUPPER GRATING

Scale: 1 1/2" = 1'-0"

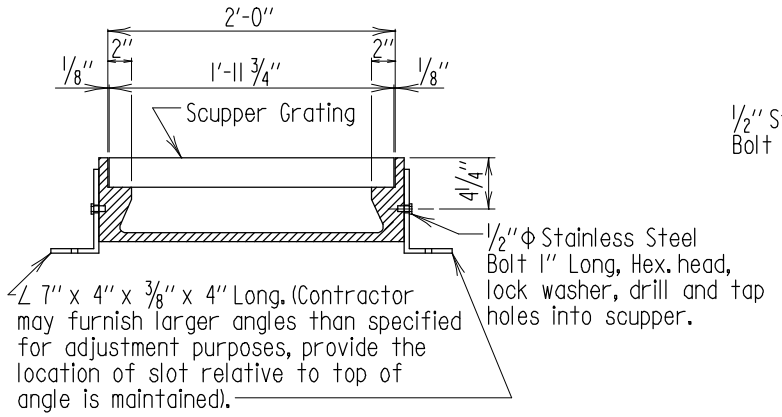

SECTION B-B

Scale: 3/4" = 1'-0"

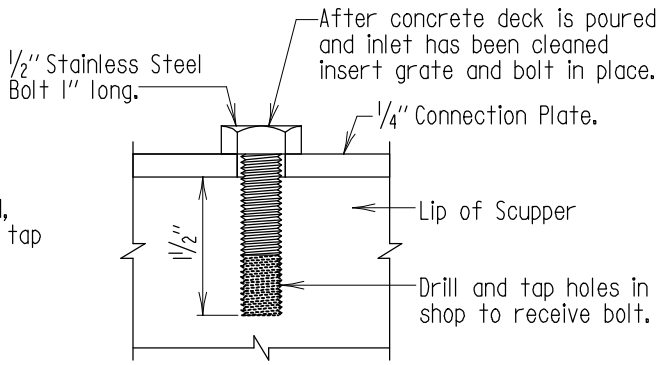

DETAIL "A"

Scale: None

APPROVAL		
E.S. Freedman DIRECTOR OFFICE OF STRUCTURES DATE: 8/24/81		
REVISIONS		
SHA	FHWA	
2-3-83	6-8-90	
1-7-93		
FHWA APPROVAL DATE: 6-8-90		

STATE OF MARYLAND
DEPARTMENT OF TRANSPORTATION
STATE HIGHWAY ADMINISTRATION
OFFICE OF STRUCTURES

TYPE IA BRIDGE SCUPPER

STANDARD NO. SUP-SC-102 SHEET 4 OF 4

SUPER-SCUPPERS

OLD NO. BR-SS(0.04)-81-130

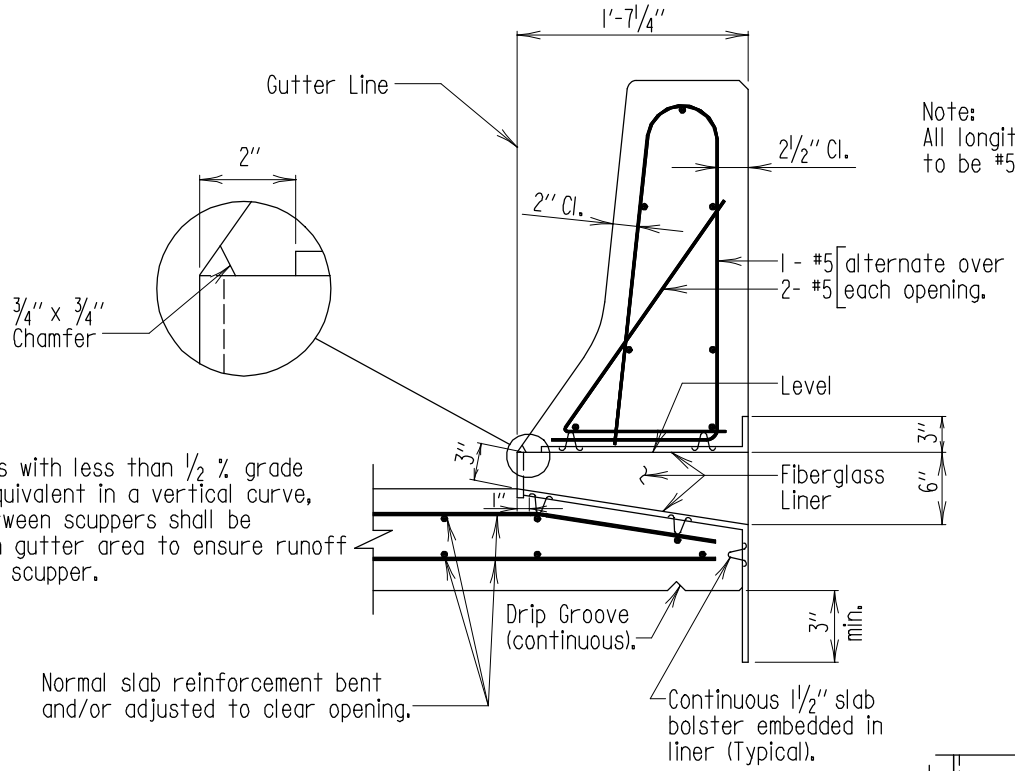

Note:
All longitudinal steel in parapet to be #5's spaced as shown.

Note:
On bridges with less than 1/2 % grade or the equivalent in a vertical curve, areas between scuppers shall be slopped in gutter area to ensure runoff will reach scupper.

Note:
Stringers and railing not shown.

SECTION A-A
Scale: 3/4" = 1'-0"

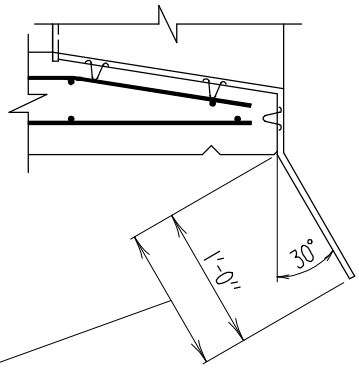

Whenever exterior stringers are greater than 3'-0" deep, scuppers are to be modified and fabricated with this lip.

Notes:
1. Fiberglass lining shall extend 3" beyond sides and top of opening on exterior face of parapet and 3" min. below bottom of slab on exterior face of parapet. Slab bolsters shall have upturned feet embedded in the fiberglass.
2. Omit openings in panels 10' each side of piers and abutments and in those sections which carry light posts support brackets. Normal parapet and sidewalk reinforcing shall be provided in all sections without openings.
3. Fiberglass shall conform to 921.11. The surface of the fiberglass designed to bond with other materials shall be free of bond inhibiting agents.

APPROVAL
E.S. Freedman DIRECTOR OFFICE OF STRUCTURES
DATE: 3/3/83

REVISIONS	
SHA	FHWA
8-1-94	
1-6-95	
7-24-01	
1-22-01	

FHWA APPROVAL
DATE: 6-8-90

STATE OF MARYLAND
DEPARTMENT OF TRANSPORTATION
STATE HIGHWAY ADMINISTRATION
OFFICE OF STRUCTURES

TYPE II BRIDGE SCUPPER

STANDARD NO. SUP-SC-103 SHEET 1 OF 2

SUPER-SCUPPERS

OLD NO. BR-SS(0.05)-83-142

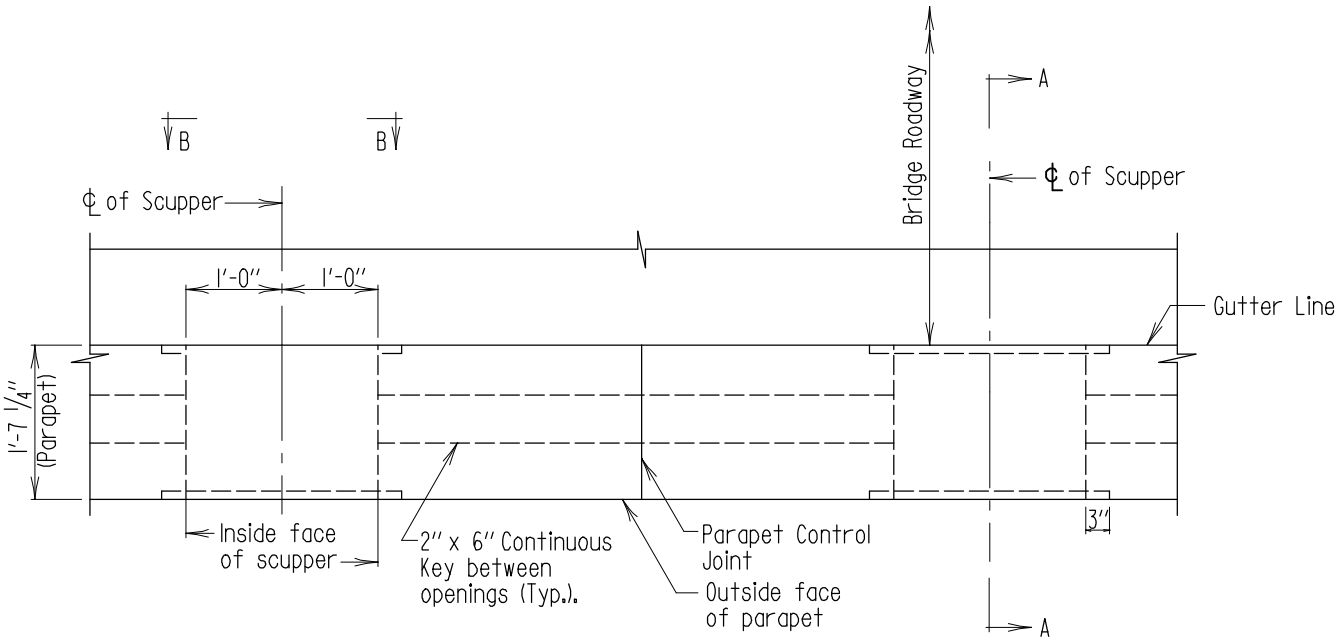

PLAN

Scale: 1/2" = 1'-0"

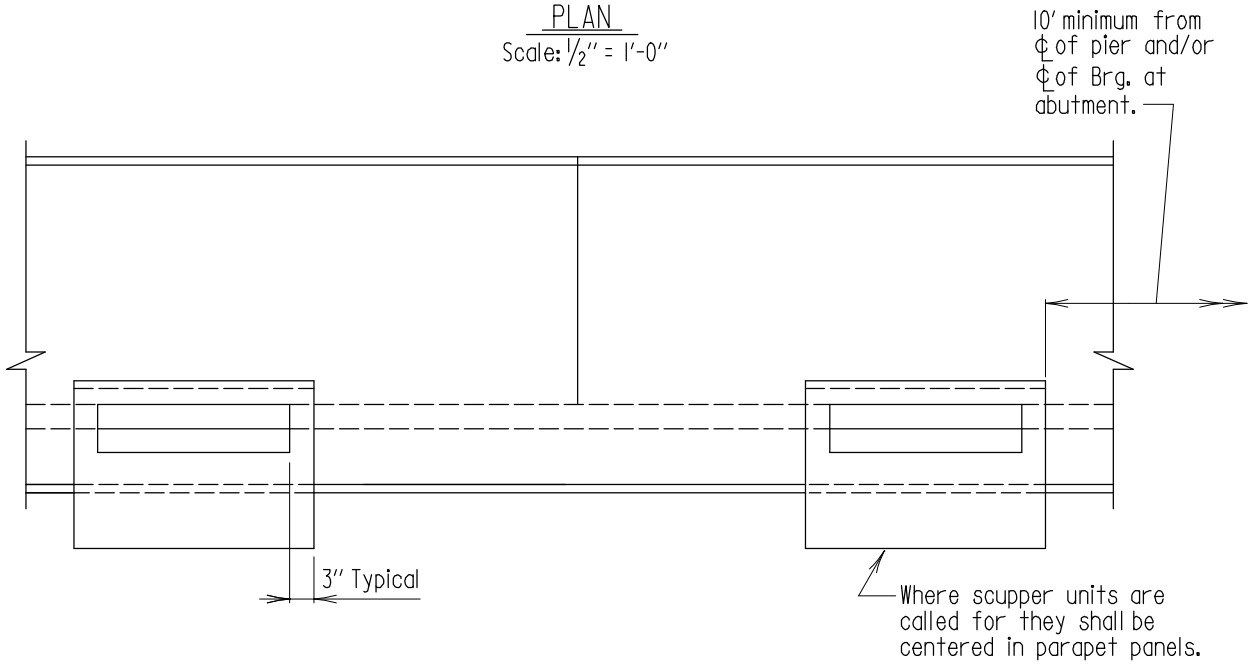

EXTERIOR ELEVATION

Scale: 1/2" = 1'-0"

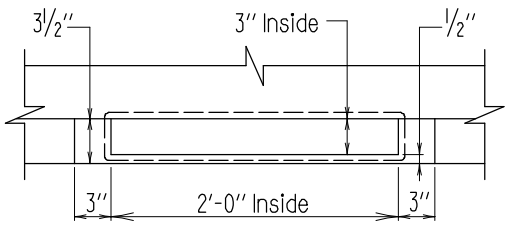

VIEW B-B

Scale: 1/2" = 1'-0"

APPROVAL	
E.S. Friedman DIRECTOR OFFICE OF STRUCTURES	
DATE: 3/3/83	
REVISIONS	
SHA	FHWA
10-27-92	
1-8-93	
8-1-94	
1-6-95	

FHWA APPROVAL	
DATE: 11-29-85	

STATE OF MARYLAND
DEPARTMENT OF TRANSPORTATION
STATE HIGHWAY ADMINISTRATION
OFFICE OF STRUCTURES

TYPE II BRIDGE SCUPPER

STANDARD NO. SUP-SC-103

SHEET 2 OF 2

SUPER-SCUPPERS

OLD NO. BR-SS(0.05)-83-142

Note:
Railing not shown.

Note:
On bridges with less than 1/2 % grade or the equivalent in a vertical curve, areas between scuppers shall be slopped in gutter area to ensure runoff will reach scupper.

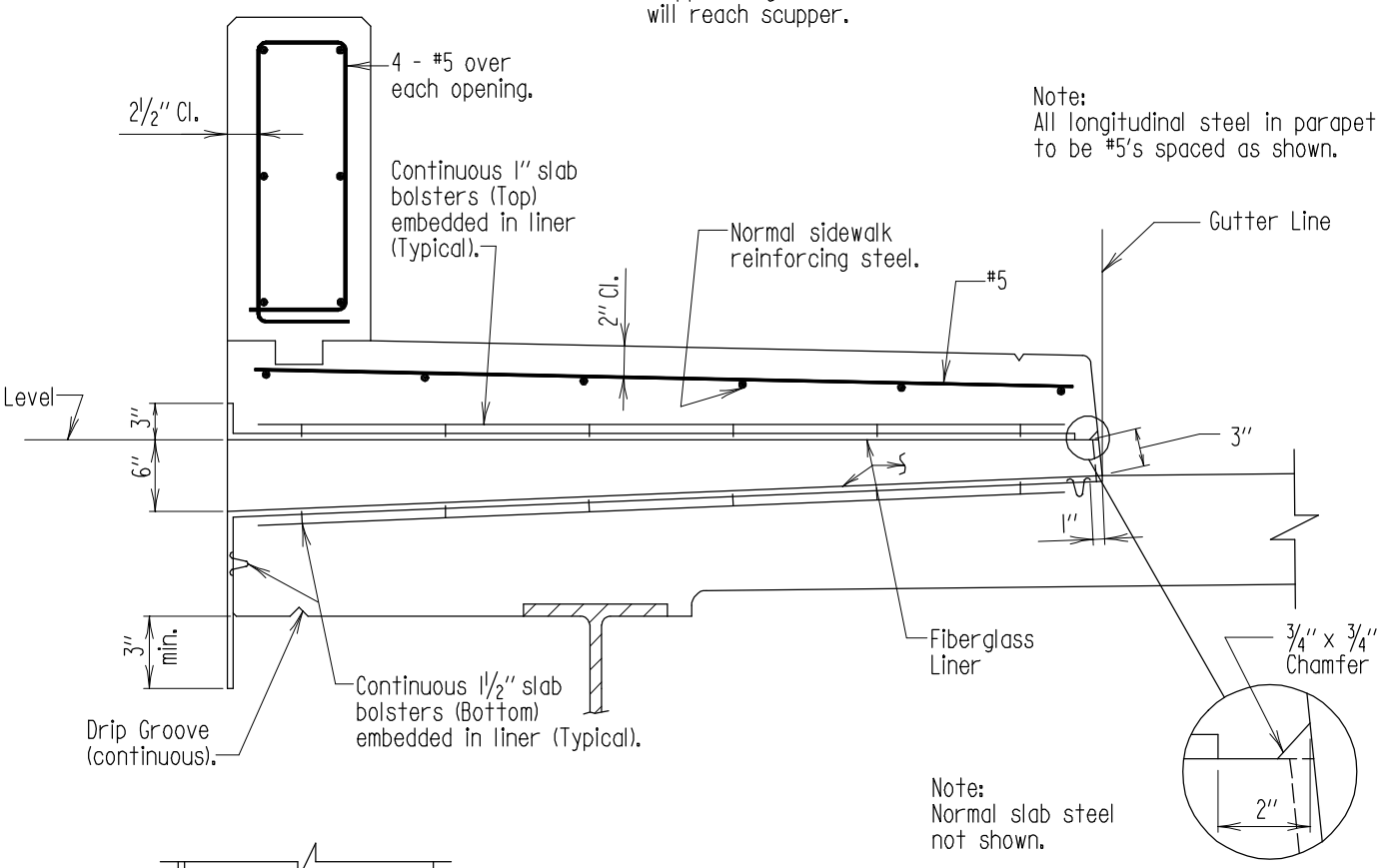

Note:
All longitudinal steel in parapet to be #5's spaced as shown.

Note:
Normal slab steel not shown.

SECTION A-A
Scale: 3/4" = 1'-0"

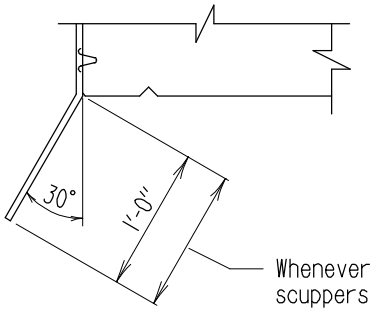

Whenever exterior stringers are greater than 3'-0" deep, scuppers are to be modified and fabricated with this lip.

Notes:
1. Fiberglass lining shall extend 3" beyond sides and top of opening on exterior face of parapet and 3" min. below bottom of slab on exterior face of parapet. Slab bolsters shall have upturned feet embedded in the fiberglass.
2. Omit openings in panels 10' each side of piers and abutments and in those sections which carry light posts support brackets. Normal parapet and sidewalk reinforcing shall be provided in all sections without openings.
3. Fiberglass shall conform to 921.11. The surface of the fiberglass designed to bond with other materials shall be free of bond inhibiting agents.

APPROVAL		
E.S. Freedman DIRECTOR OFFICE OF STRUCTURES		
DATE: 4/19/83		
REVISIONS		
SHA	FHWA	
10-27-92		
8-1-94		
1-22-01		
6-13-01		

FHWA APPROVAL
DATE: 6-8-90

STATE OF MARYLAND
DEPARTMENT OF TRANSPORTATION
STATE HIGHWAY ADMINISTRATION
OFFICE OF STRUCTURES

TYPE III BRIDGE SCUPPER

STANDARD NO. SUP-SC-104 SHEET 1 OF 2

SUPER-SCUPPERS

OLD NO. BR-SS(0.06)-83-144

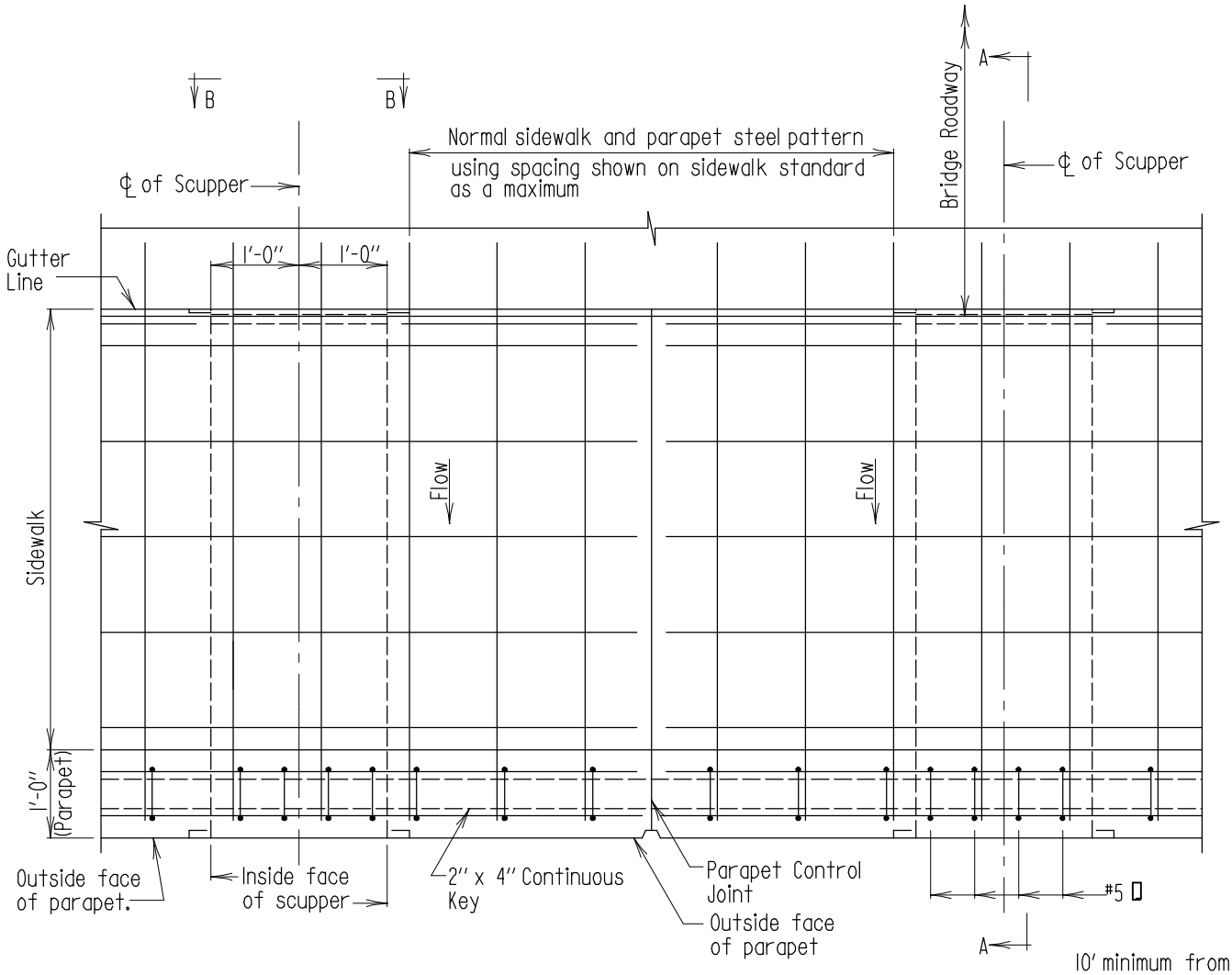

PLAN

Scale: 1/2" = 1'-0"

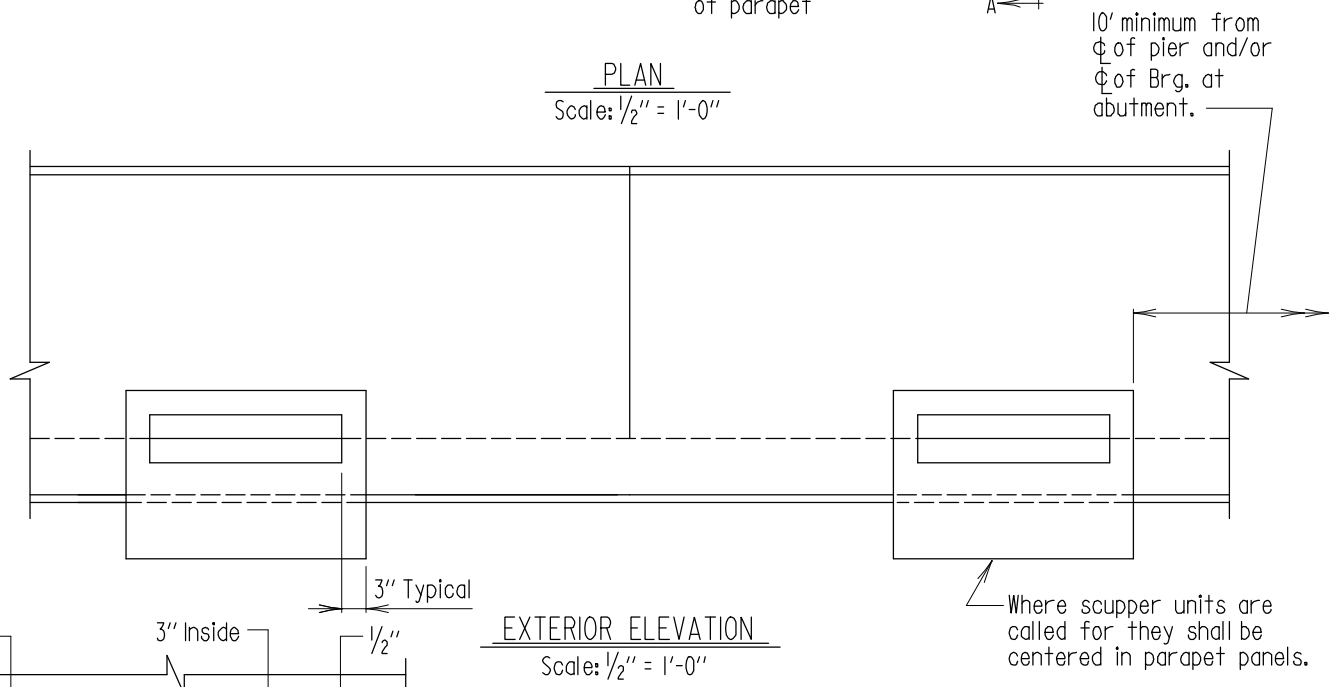

EXTERIOR ELEVATION

Scale: 1/2" = 1'-0"

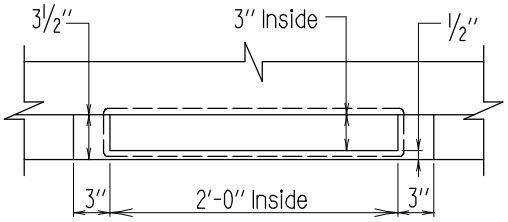

VIEW B-B

Scale: 1/2" = 1'-0"

APPROVAL	
R.S. Friedman DIRECTOR OFFICE OF STRUCTURES	
DATE: 4/19/83	
REVISIONS	
SHA	FHWA
10-27-92	
1-8-93	
8-1-94	
FHWA APPROVAL	
DATE: 11-29-85	

STATE OF MARYLAND
DEPARTMENT OF TRANSPORTATION
STATE HIGHWAY ADMINISTRATION
OFFICE OF STRUCTURES

TYPE III BRIDGE SCUPPER

STANDARD NO. SUP-SC-104

SHEET 2 OF 2

SUPER-SCUPPERS

OLD NO. BR-SS(0.06)-83-144

GENERAL NOTES

Specifications: Latest S.H.A. Specifications and Special Provisions for materials and construction. Latest AASHTO Standard Specifications for Highway Bridges for design.

Materials: Scuppers shall be grey cast iron, conforming to ASTM A 48 Class 30 B.

Gratings shall be structural steel conforming to ASTM A 709 Grade 36 and epoxy coated.

Stainless steel bolts shall conform to ASTM A 193, Identification Symbol B8, Type 304.

Paint: Scuppers shall be painted with one shop coat inside and outside. Shop paint shall conform to 912.02.01. Insides of scuppers to be painted with one coat of coal tar epoxy SSPC-Paint 16. Vertical showing surface in curb face and horizontal showing surface in roadway to be painted with the second and finish coats specified in 912.16, System E. Outside of scuppers exposed to atmosphere below the concrete deck slab, shall receive the field paint required for structural steel. If there is no paint indicated, the scupper shall be painted to match color of existing beam.

Shipping: Grate and Scupper shall be shipped as unit with grate hold down bolts in place (not welded).

Measurement and Payment: The furnishing, fabricating, erecting, etc. of all new scuppers for the bridge will be measured and paid for at the Contract unit price per each for the Scupper item regardless of length of downspouts, etc. If no specific items appear in the Invitation for Bids, the cost shall be included in the pertinent Superstructure Concrete item.

APPROVAL		
E.S. Freedman DIRECTOR OFFICE OF STRUCTURES DATE: 7/1/83		
REVISIONS		
SHA	FHWA	
12-27-93		
1-22-01		
FHWA APPROVAL		
DATE: 10-6-83		

STATE OF MARYLAND
DEPARTMENT OF TRANSPORTATION
STATE HIGHWAY ADMINISTRATION
OFFICE OF STRUCTURES

TYPE IV BRIDGE SCUPPER

STANDARD NO. SUP-SC-105 SHEET 1 OF 4

SUPER-SCUPPERS

OLD NO. BR-SS(0.10)-83-148

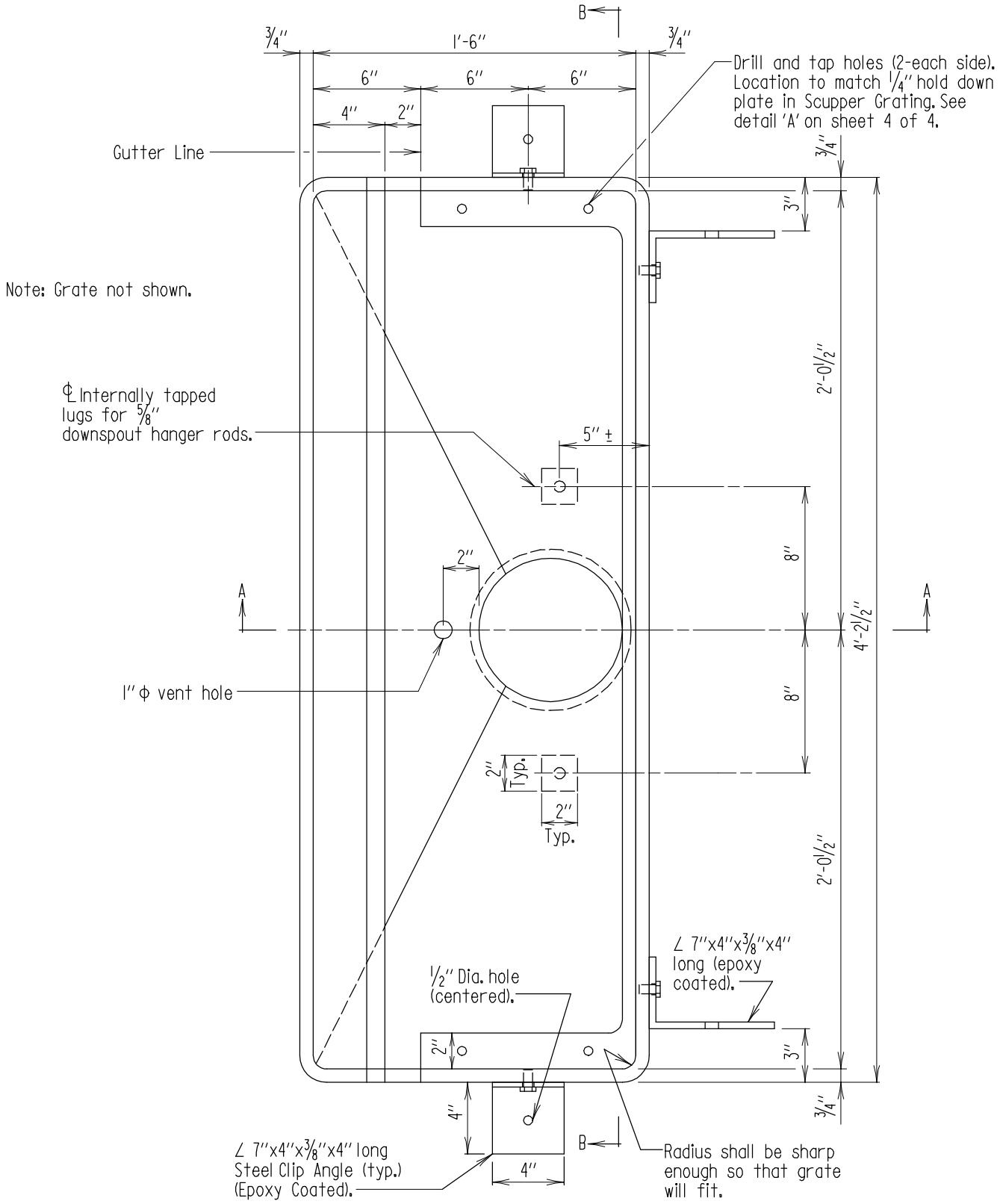

PLAN

Scale: 1 1/2" = 1'-0"

Note:
1. Wood forms may be used in the area of the scupper, as approved by the Engineer.
2. There must be a minimum of 5" of concrete under entire scupper area, with a mat of rebars equivalent in size and spacing to normal bottom mat pattern of deck. This may require the lowering of the deck in this area.

APPROVAL		
E.S. Freedman DIRECTOR OFFICE OF STRUCTURES		
DATE: 7/1/83		
REVISIONS		
SHA	FHWA	
3-16-89	6-8-90	
1-7-93		
5-20-94		
1-22-01		

FHWA APPROVAL
DATE: 6-8-90

STATE OF MARYLAND
DEPARTMENT OF TRANSPORTATION
STATE HIGHWAY ADMINISTRATION
OFFICE OF STRUCTURES

TYPE IV BRIDGE SCUPPER

STANDARD NO. SUP-SC-105 SHEET 2 OF 4

SUPER-SCUPPERS

OLD NO. BR-SS(0.10)-83-148

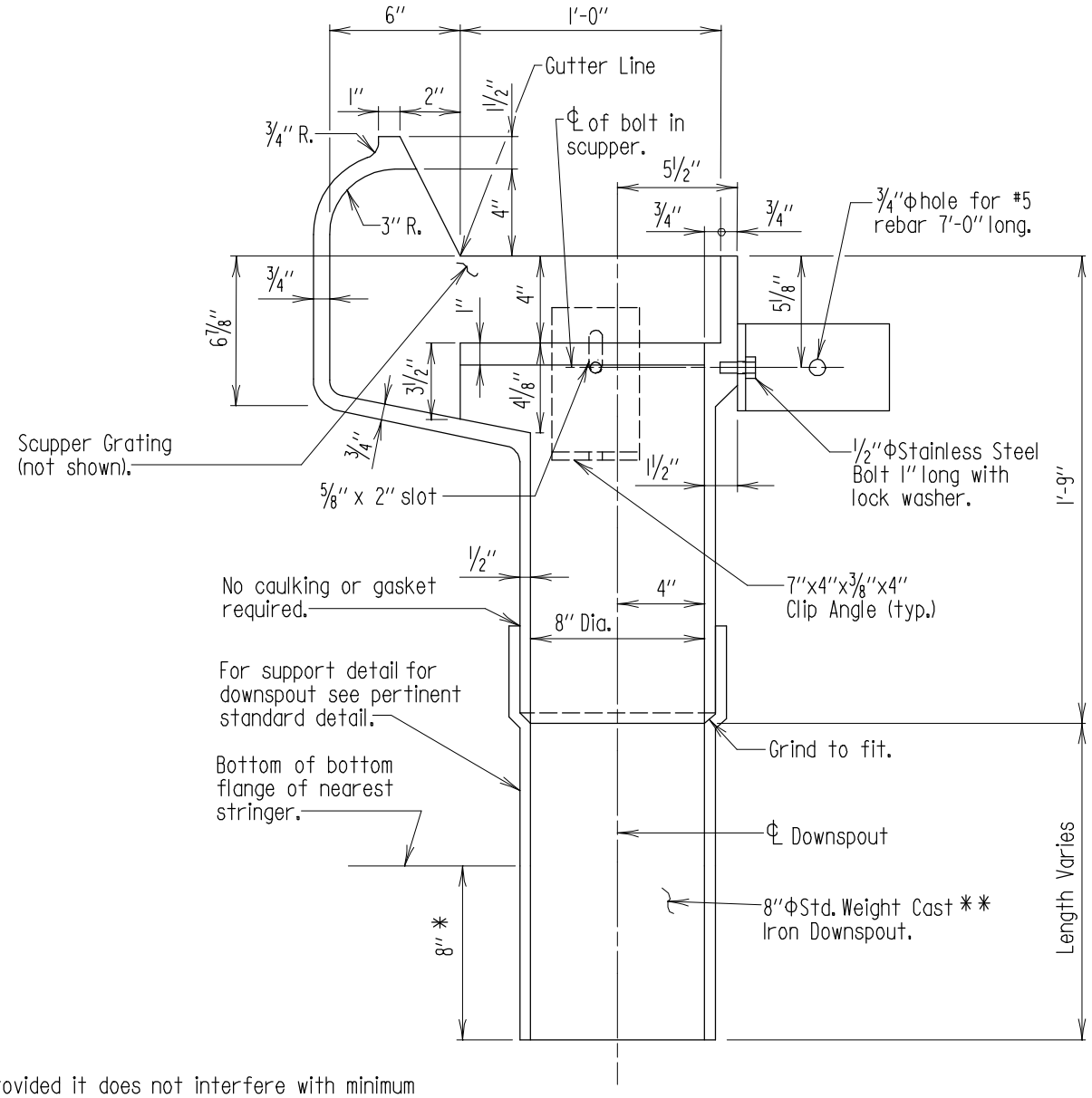

* Provided it does not interfere with minimum underclearance over roadway and/or shoulder.

** The downspout may be fiberglass. Color shall match finished bridge paint color. No additional compensation will be allowed for whichever option is chosen.

SECTION A-A

Scale: 1 1/2" = 1'-0"

APPROVAL		
E.S. Freedman DIRECTOR OFFICE OF STRUCTURES DATE: 7/1/83		
REVISIONS		
SHA	FHWA	
1-7-93		
5-12-93		
1-22-01		
7-14-08		

FHWA APPROVAL DATE: 10-6-83

STATE OF MARYLAND
DEPARTMENT OF TRANSPORTATION
STATE HIGHWAY ADMINISTRATION
OFFICE OF STRUCTURES

TYPE IV BRIDGE SCUPPER

STANDARD NO. SUP-SC-105

SHEET 3 OF 4

SUPER-SCUPPERS

OLD NO. BR-SS(0.10)-83-148

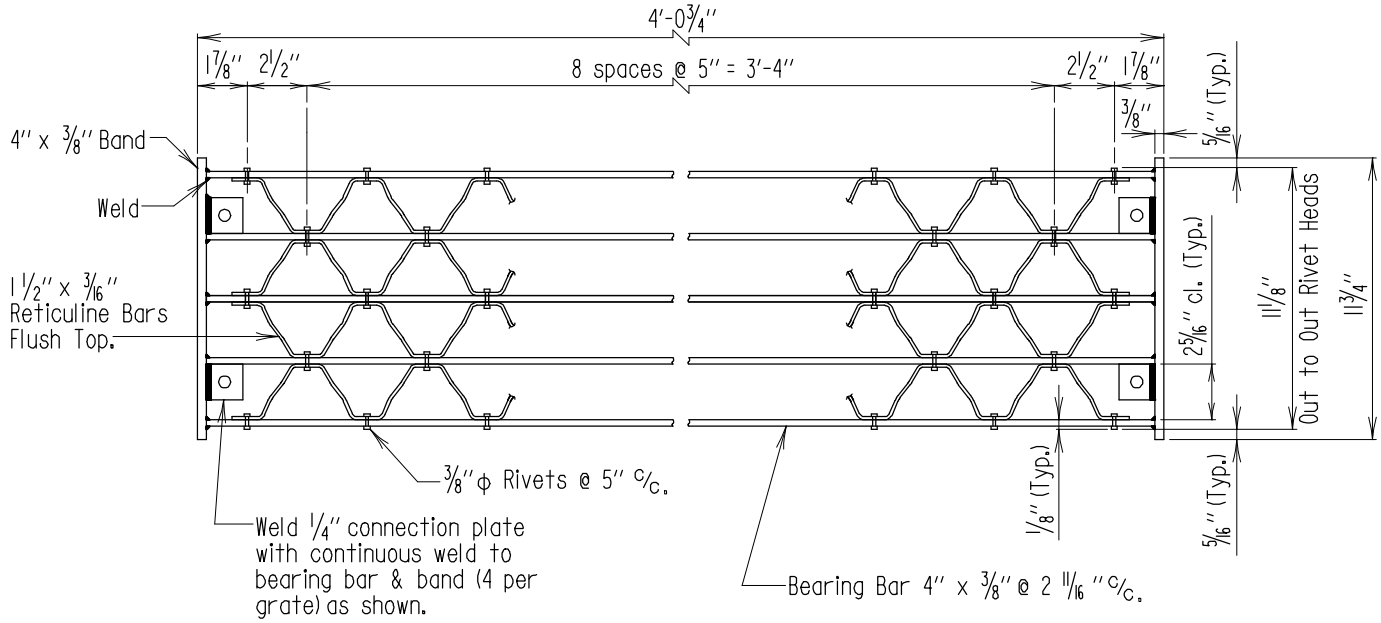

PLAN - SCUPPER GRATING

Scale: 1 1/2" = 1'-0"

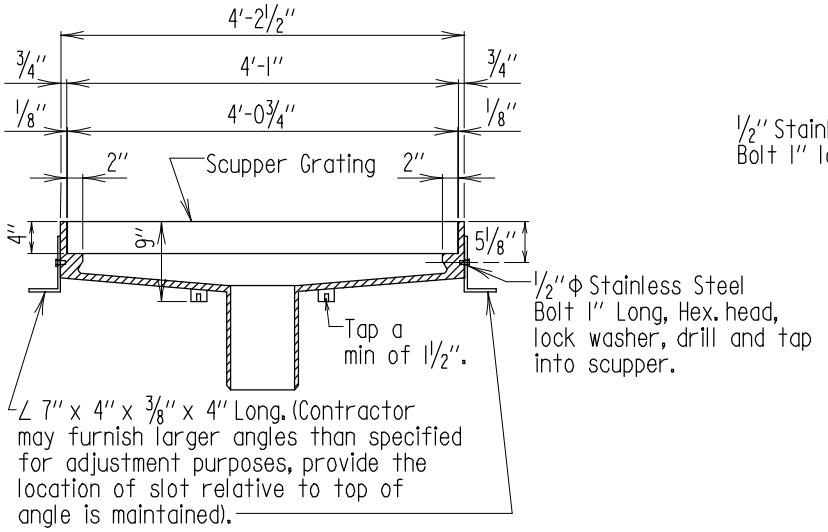

SECTION B-B

Scale: 3/4" = 1'-0"

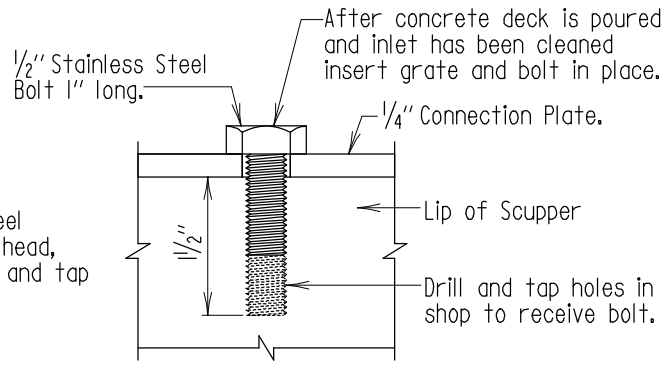

DETAIL "A"

Scale: None

APPROVAL		
R.S. Friedman DIRECTOR OFFICE OF STRUCTURES DATE: 7/1/83		
REVISIONS		
SHA	FHWA	
1-7-93		
6-1-04		
FHWA APPROVAL DATE: 10-6-83		

STATE OF MARYLAND
DEPARTMENT OF TRANSPORTATION
STATE HIGHWAY ADMINISTRATION
OFFICE OF STRUCTURES

TYPE IV BRIDGE SCUPPER

STANDARD NO. SUP-SC-105 SHEET 4 OF 4

SUPER-SCUPPERS

OLD NO. BR-SS(0.10)-83-148

GENERAL NOTES

Specifications: Latest S.H.A. Specifications and Special Provisions for materials and construction. Latest AASHTO Standard Specifications for Highway Bridges for design.

Materials: Scuppers shall be grey cast iron, conforming to ASTM A 48 Class 30 B.

Gratings shall be structural steel conforming to ASTM A 709 Grade 36 and epoxy coated.

Stainless steel bolts shall conform to ASTM A 193, Identification Symbol B8, Type 304.

Paint: Scuppers shall be painted with one shop coat inside and outside. Shop paint shall conform to 912.02.01. Insides of scuppers to be painted with one coat of coal tar epoxy SSPC-Paint 16. Vertical showing surface in curb face and horizontal showing surface in roadway to be painted with the second and finish coats specified in 912.16, System E. Outside of scuppers exposed to atmosphere below the concrete deck slab, shall receive the field paint required for structural steel. If there is no paint indicated, the scupper shall be painted to match color of existing beam.

Shipping: Grate and Scupper shall be shipped as unit with grate hold down bolts in place (not welded).

Measurement of Payment: The furnishing, fabricating, erecting, etc. of all new scuppers for the bridge will be measured and paid for at the Contract unit price per each for the Scupper item regardless of length of downspouts, etc. If no specific items appear in the Invitation for Bids, the cost shall be included in the pertinent Superstructure Concrete item.

APPROVAL		
R.S. Freedman DIRECTOR OFFICE OF STRUCTURES DATE: 7/26/83		
REVISIONS		
SHA	FHWA	
12-27-93		
1-22-01		
FHWA APPROVAL		
DATE: 11-29-85		

STATE OF MARYLAND
DEPARTMENT OF TRANSPORTATION
STATE HIGHWAY ADMINISTRATION
OFFICE OF STRUCTURES

TYPE V BRIDGE SCUPPER

STANDARD NO. SUP-SC-106 SHEET 1 OF 4

SUPER-SCUPPERS

OLD NO. BR-SS(0.12)-83-151

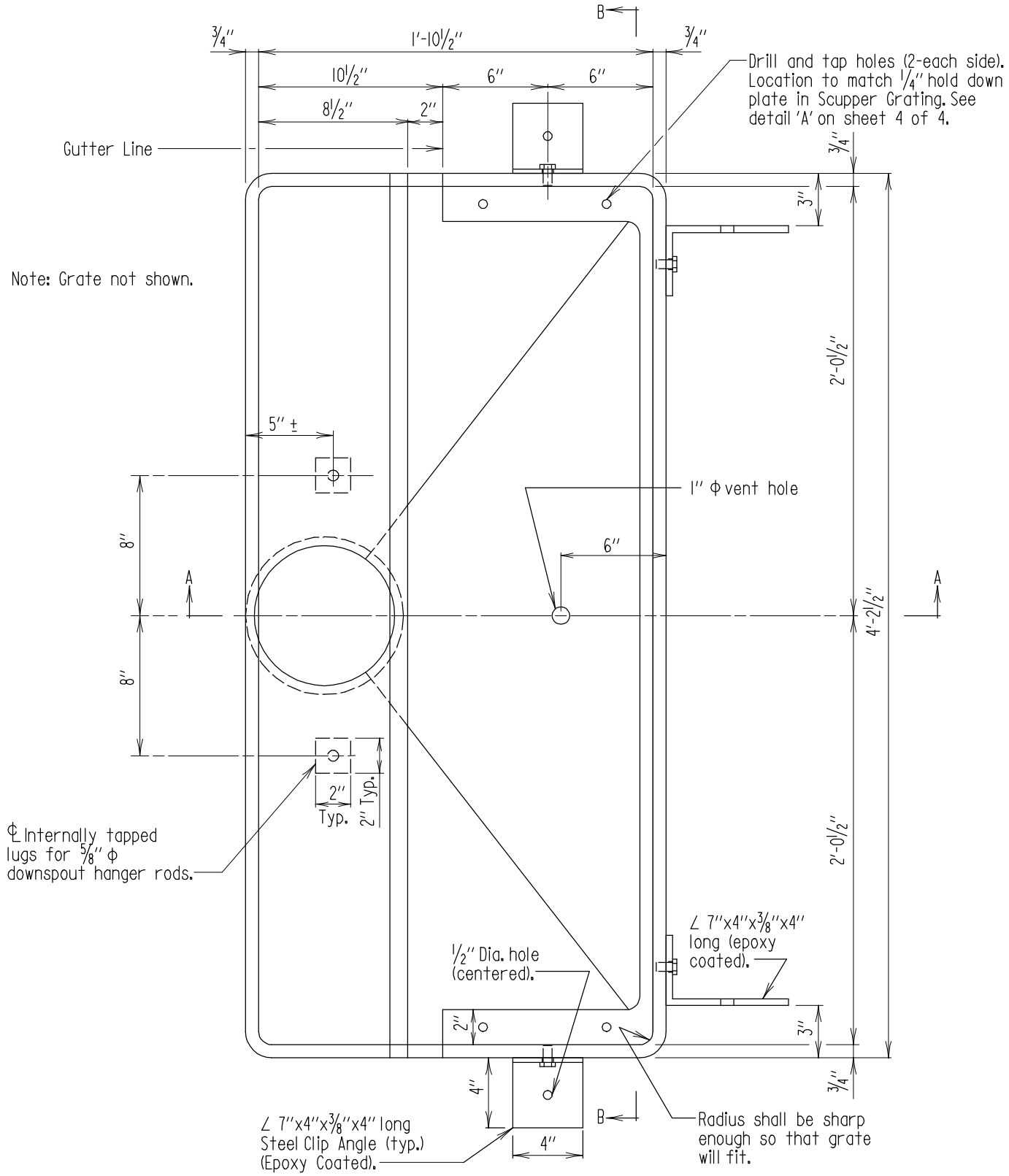

PLAN

Scale: 1 1/2" = 1'-0"

Note:
1. Wood forms may be used in the area of the scupper, as approved by the Engineer.
2. There must be a minimum of 5" of concrete under entire scupper area, with a mat of rebars equivalent in size and spacing to normal bottom mat pattern of deck. This may require the lowering of the deck in this area.

APPROVAL		
R.S. Friedman DIRECTOR OFFICE OF STRUCTURES		
DATE: 7/6/83		
REVISIONS		
SHA	FHWA	
1-7-93		
5-20-94		
1-22-01		
FHWA APPROVAL		
DATE: 11-29-85		

STATE OF MARYLAND
DEPARTMENT OF TRANSPORTATION
STATE HIGHWAY ADMINISTRATION
OFFICE OF STRUCTURES

TYPE V BRIDGE SCUPPER

STANDARD NO. SUP-SC-106 SHEET 2 OF 4

SUPER-SCUPPERS

OLD NO. BR-SS(0.12)-83-151

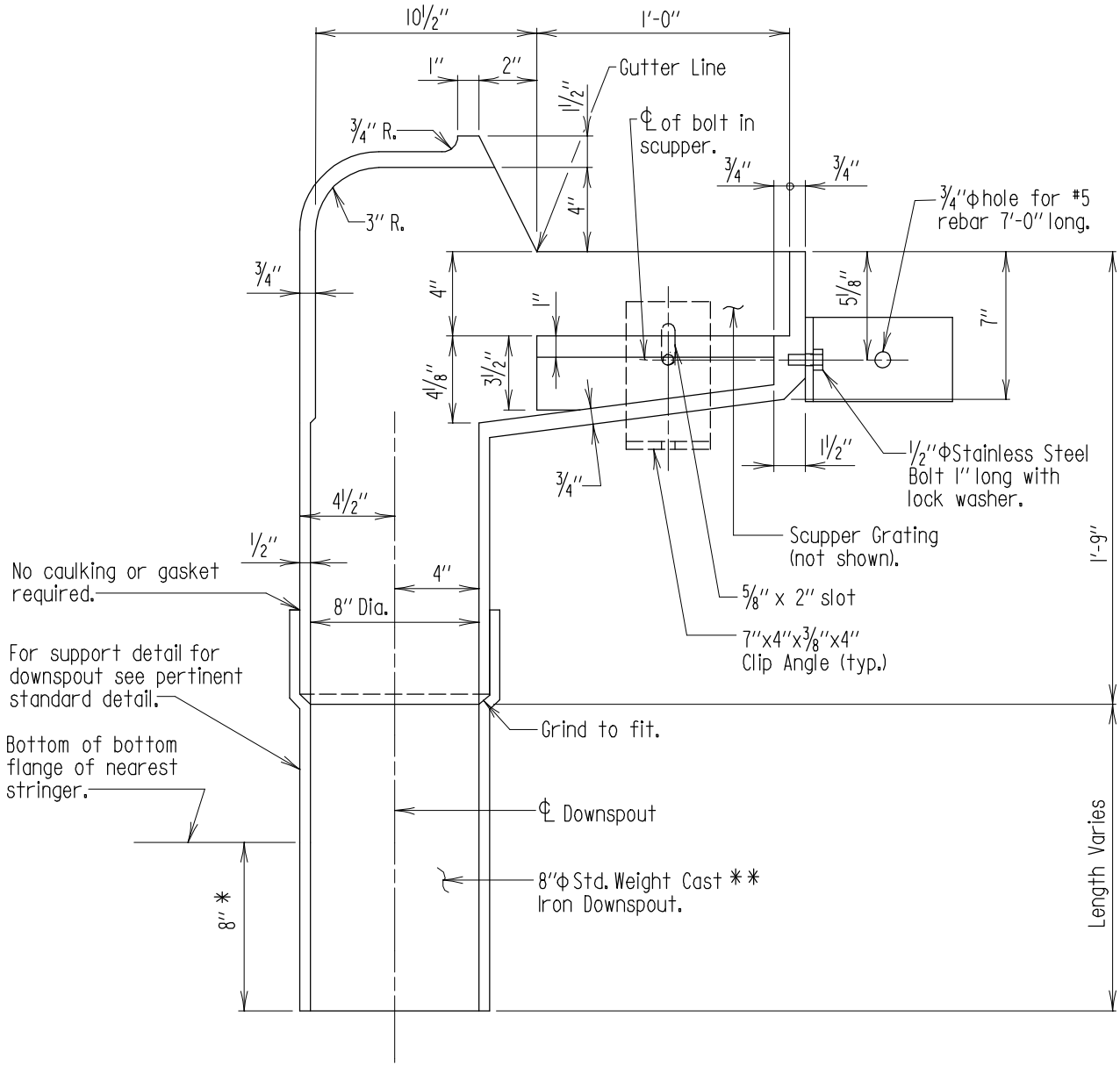

* Provided it does not interfere with minimum underclearance over roadway and/or shoulder.

** The downspout may be fiberglass. Color shall match finished bridge paint color. No additional compensation will be allowed for whichever option is chosen.

SECTION A-A

Scale: 1 1/2" = 1'-0"

APPROVAL		
E.S. Freedman DIRECTOR OFFICE OF STRUCTURES DATE: 7/6/83		
REVISIONS		
SHA	FHWA	
1-7-93		
5-12-93		
1-22-01		
7-14-08		

FHWA APPROVAL DATE: 11-29-85

STATE OF MARYLAND
DEPARTMENT OF TRANSPORTATION
STATE HIGHWAY ADMINISTRATION
OFFICE OF STRUCTURES

TYPE V BRIDGE SCUPPER

STANDARD NO. SUP-SC-106

SHEET 3 OF 4

SUPER-SCUPPERS

OLD NO. BR-SS(0.12)-83-151

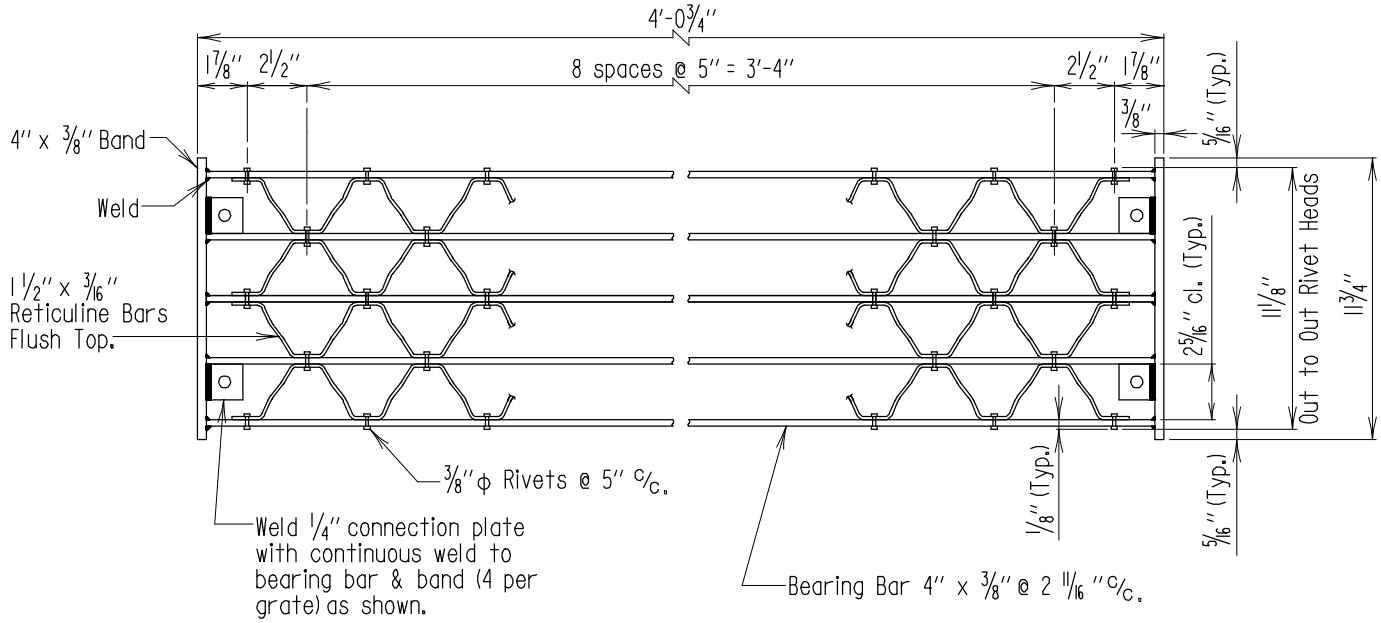

PLAN - SCUPPER GRATING

Scale: 1 1/2" = 1'-0"

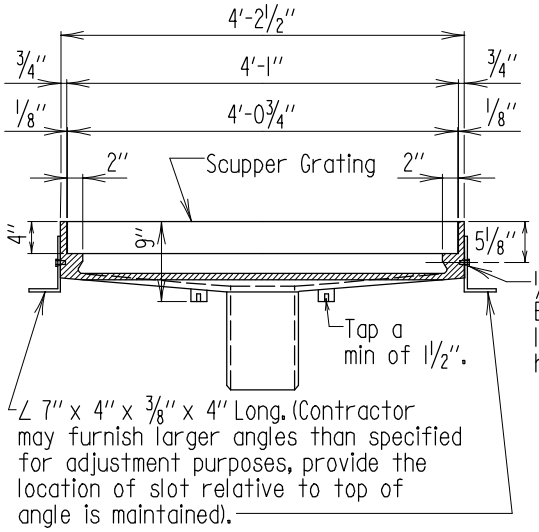

SECTION B-B

Scale: 3/4" = 1'-0"

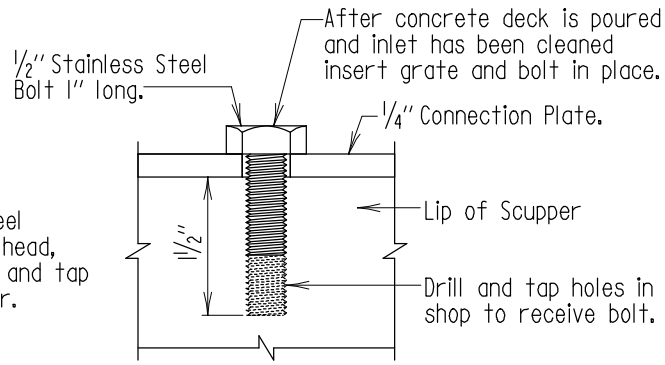

DETAIL "A"

Scale: None

APPROVAL		
R.S. Friedman DIRECTOR OFFICE OF STRUCTURES DATE: 7/6/83		
REVISIONS		
SHA	FHWA	
1-7-93		
6-1-04		
FHWA APPROVAL		
DATE: 11-29-85		

STATE OF MARYLAND
DEPARTMENT OF TRANSPORTATION
STATE HIGHWAY ADMINISTRATION
OFFICE OF STRUCTURES

TYPE V BRIDGE SCUPPER

STANDARD NO. SUP-SC-106 SHEET 4 OF 4

SUPER-SCUPPERS

OLD NO. BR-SS(0.12)-83-151

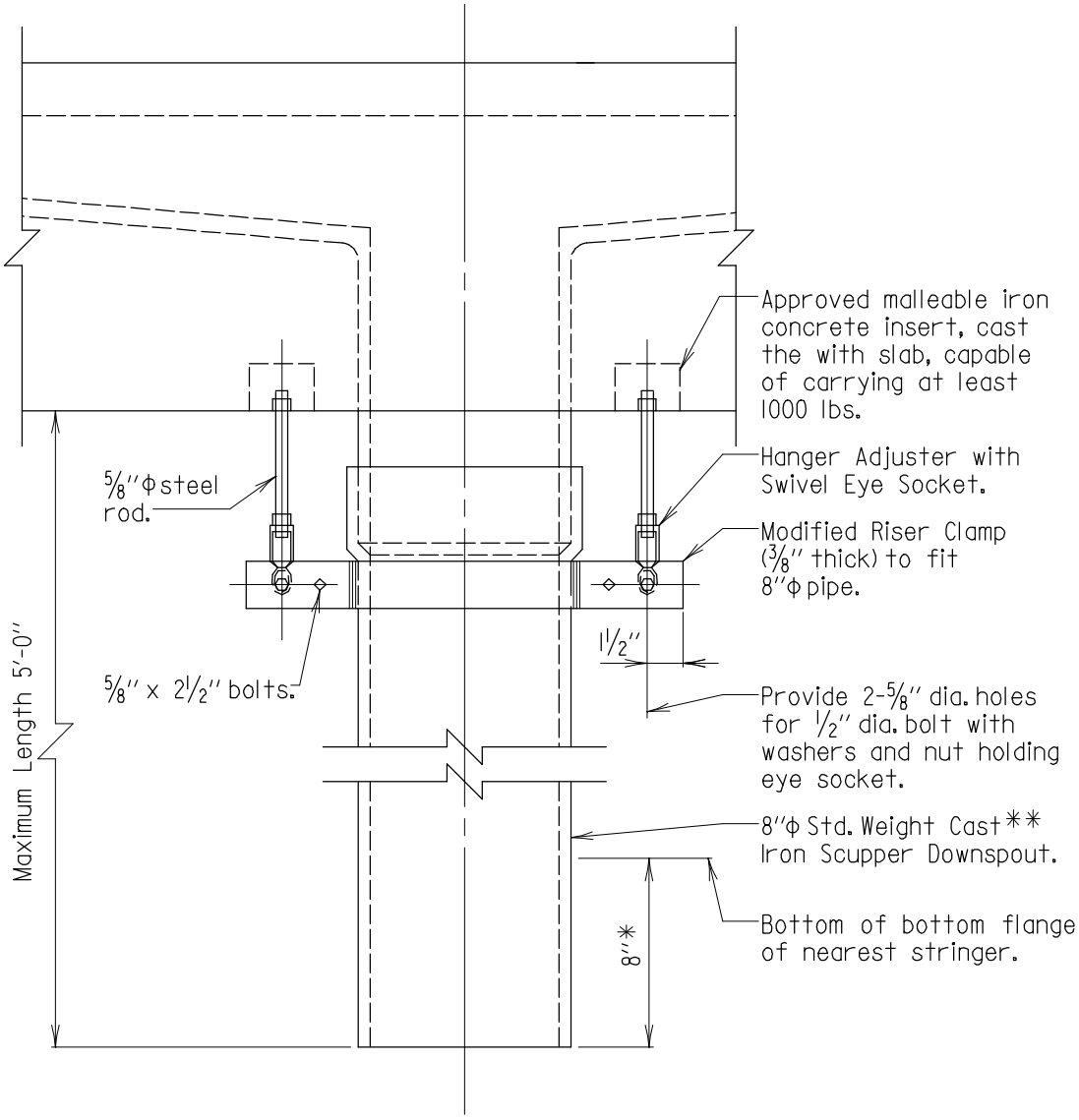

ELEVATION
Scale: 1 1/2" = 1'-0"

* Provided it does not interfere with minimum underclearance over roadway and/or shoulder.

** The downspout may be fiberglass. Color shall match finished bridge paint color. No additional compensation will be allowed for whichever option is chosen.

Notes:

1. All exposed material, except cast iron scupper downspout to be epoxy coated in conformance with Section 465.
2. Exposed portions of cast iron scupper downspout to be coated with coal tar epoxy conforming to Specification SSPC-16.

APPROVAL		
R.S. Freedman DIRECTOR OFFICE OF STRUCTURES DATE: 4/18/83		
REVISIONS		
SHA	FHWA	
5-12-93		
9-24-96		
1-22-01		
7-14-08		

FHWA APPROVAL
DATE: 11-29-85

STATE OF MARYLAND
DEPARTMENT OF TRANSPORTATION
STATE HIGHWAY ADMINISTRATION
OFFICE OF STRUCTURES

SCUPPER DOWNSPOUT SUPPORT BRACKET
FOR SHORT CAST IRON SCUPPER DOWNSPOUT

STANDARD NO. SUP-SC-201 SHEET 1 OF 1

SUPER-SCUPPERS

OLD NO. BR-SS(0.07)-83-145

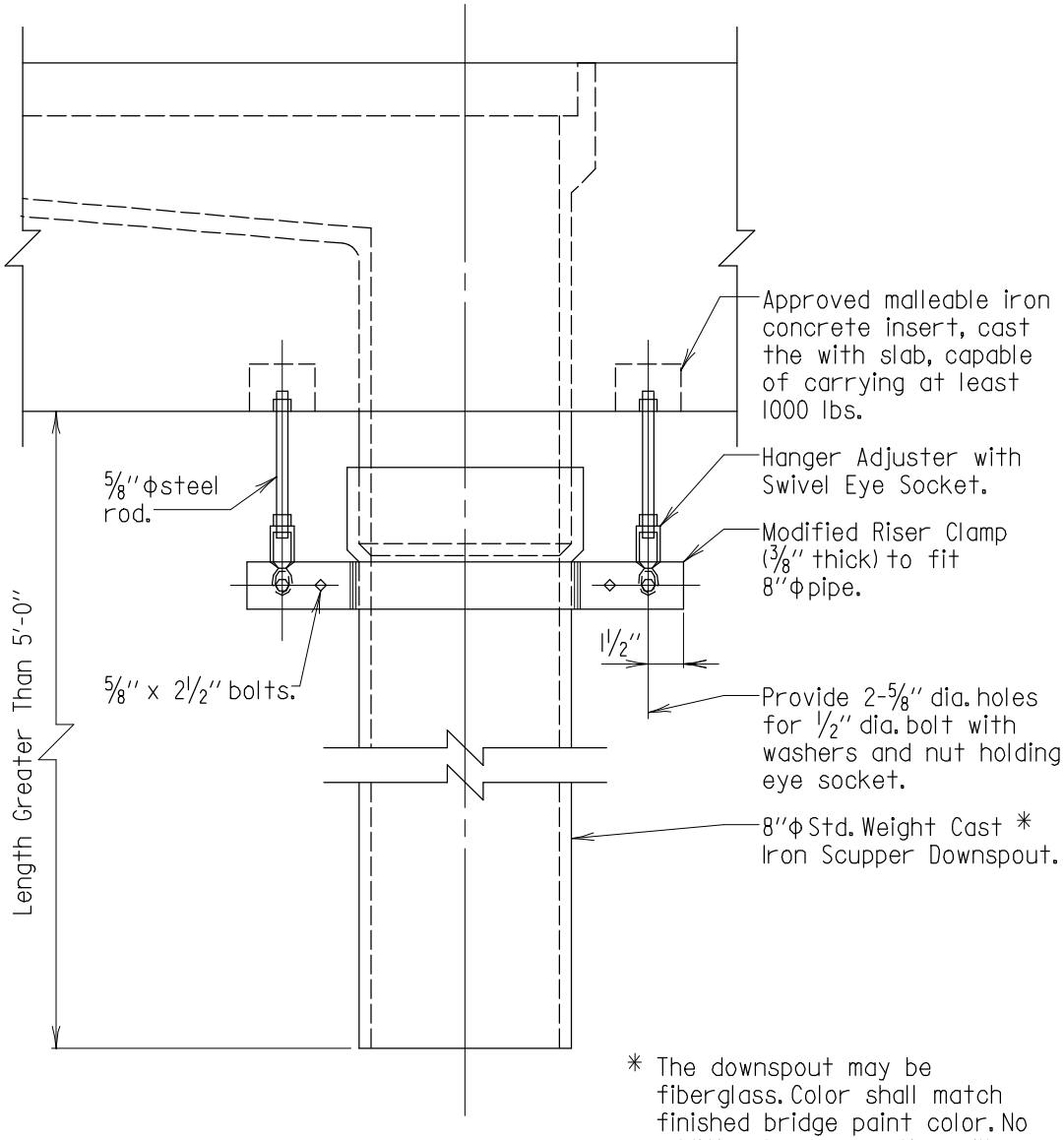

* The downspout may be fiberglass. Color shall match finished bridge paint color. No additional compensation will be allowed for whichever option is chosen.

ELEVATION

Scale: 1 1/2" = 1'-0"

Notes:

1. All exposed material, except cast iron scupper downspout to be epoxy coated in conformance with Section 465.
2. Exposed portions of cast iron scupper downspout to be coated with coal tar epoxy conforming to Specification SSPC-16.

APPROVAL	
R. S. Freedman DIRECTOR OFFICE OF STRUCTURES	
DATE: 2/12/90	
REVISIONS	
SHA	FHWA
5-12-93	
1-22-01	
7-14-08	

FHWA APPROVAL
DATE:

STATE OF MARYLAND
DEPARTMENT OF TRANSPORTATION
STATE HIGHWAY ADMINISTRATION
OFFICE OF STRUCTURES

SCUPPER DOWNSPOUT SUPPORT BRACKET
FOR LONG CAST IRON SCUPPER DOWNSPOUT

STANDARD NO. SUP-SC-202 SHEET 1 OF 2

SUPER-SCUPPERS

OLD NO. BR-SS(0.08)-83-146

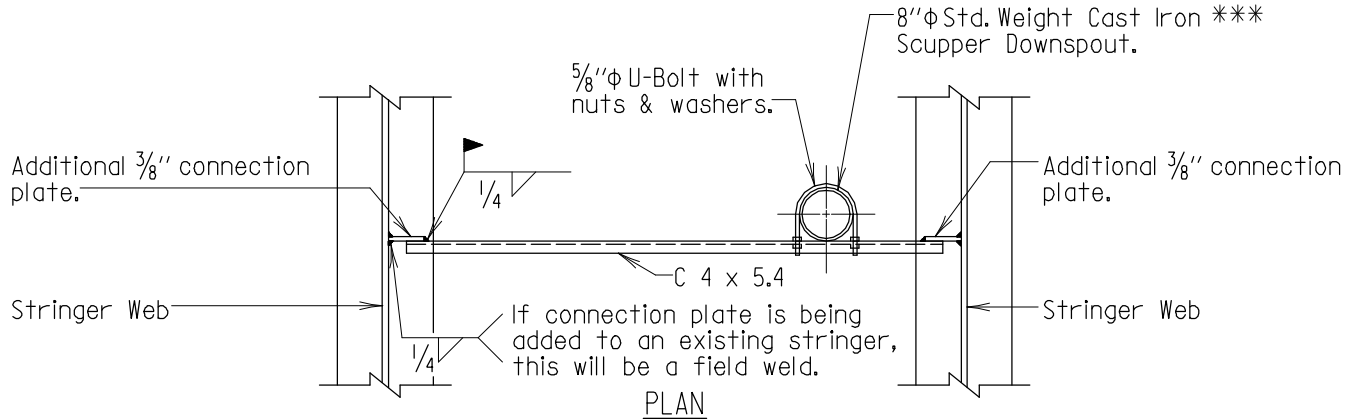

PLAN

(NO PROPOSED STIFFENER
AVAILABLE IN SCUPPER AREA)

Scale: 3/8" =1'-0"

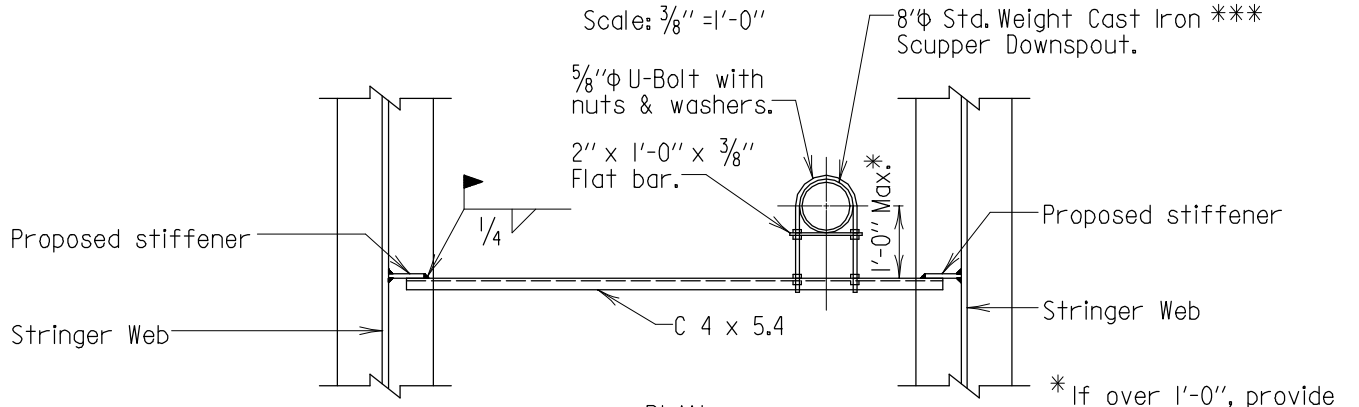

* If over 1'-0", provide detail as shown above.

PLAN

(PROPOSED STIFFENER
AVAILABLE IN SCUPPER AREA)

Scale: 3/8" =1'-0"

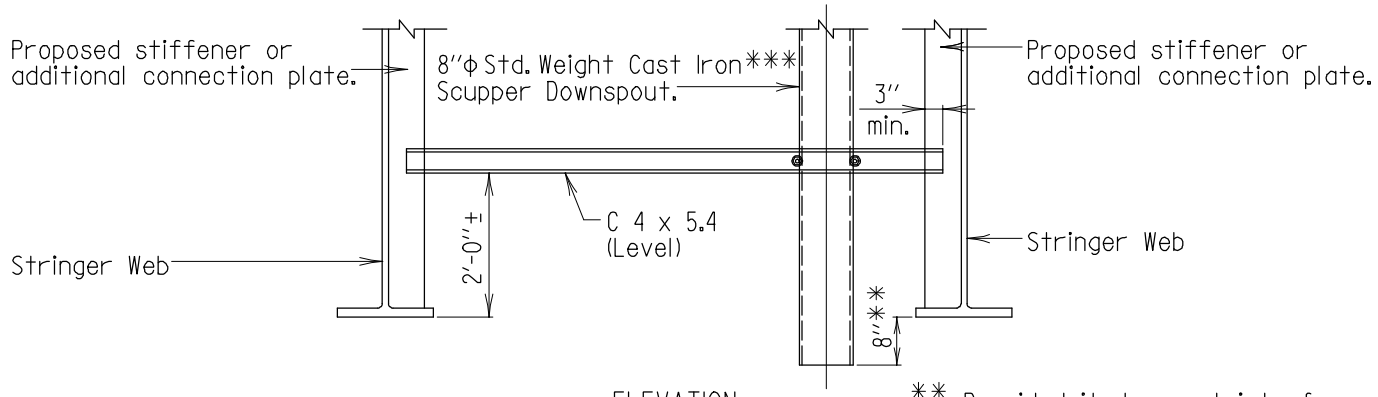

ELEVATION

Scale: 3/8" =1'-0"

** Provided it does not interfere with minimum underclearance over roadway and/or shoulder.

*** The downspout may be fiberglass. Color shall match finished bridge paint color. No additional compensation will be allowed for whichever option is chosen.

Notes:

1. U bolts, nuts, washers, bars, channels, etc. shall receive the same number of coats and same color field paint as required for structural steel. If weathering steel is specified it need not be painted.
2. Exposed portions of cast iron scupper downspout to be coated with coal tar epoxy conforming to Specification SSPC-16.

APPROVAL
E.S. Freedman DIRECTOR OFFICE OF STRUCTURES
DATE: 5/2/83

REVISIONS	
SHA	FHWA
5-12-93	
1-22-01	
12-17-01	
7-14-08	

FHWA APPROVAL
DATE: 6-8-90

STATE OF MARYLAND
DEPARTMENT OF TRANSPORTATION
STATE HIGHWAY ADMINISTRATION
OFFICE OF STRUCTURES

ADDITIONAL SCUPPER DOWNSPOUT SUPPORT BRACKET
FOR LONG CAST IRON SCUPPER DOWNSPOUT

STANDARD NO. SUP-SC-202 SHEET 2 OF 2

SUPER-SCUPPERS

OLD NO. BR-SS(0.08)-83-146

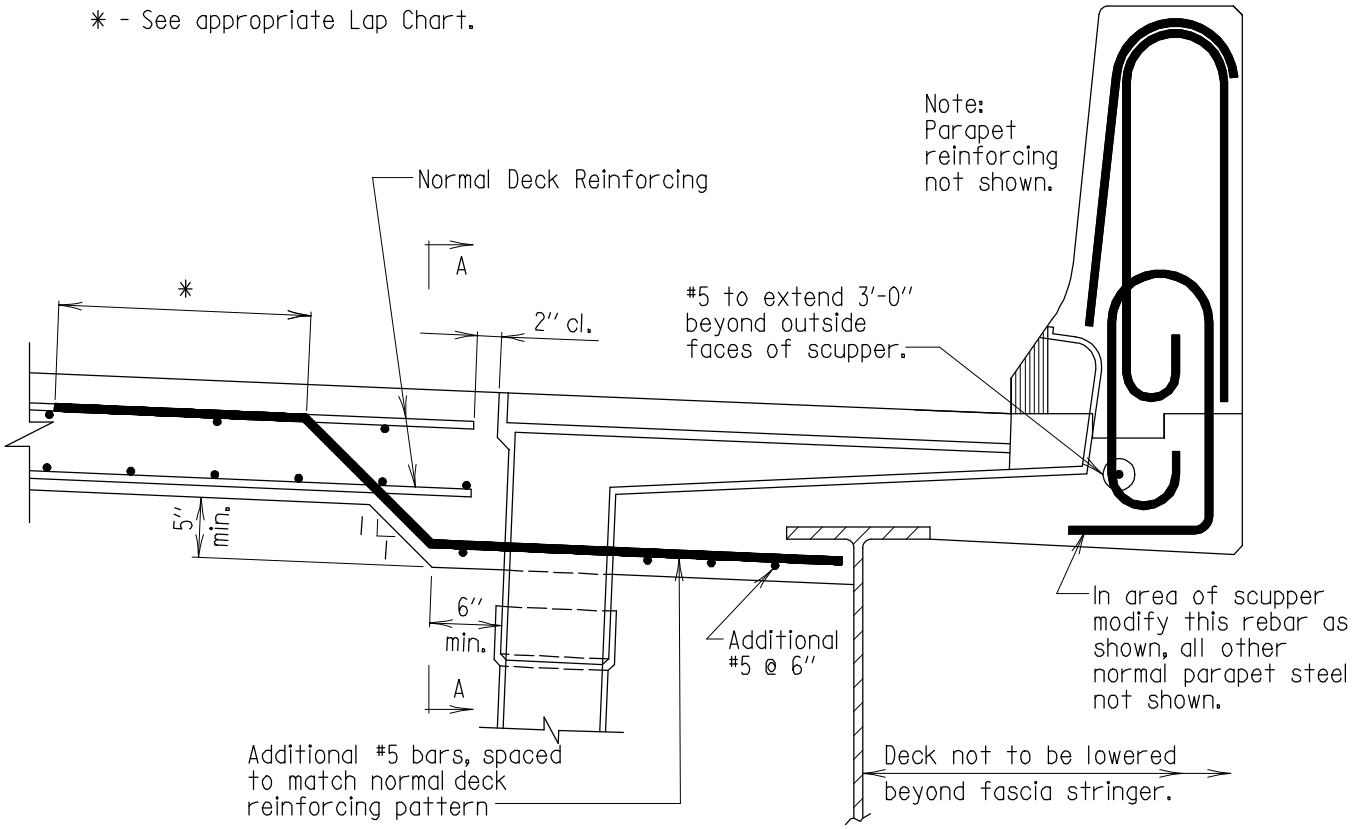

SECTION

Scale: 3/4'' = 1'-0''

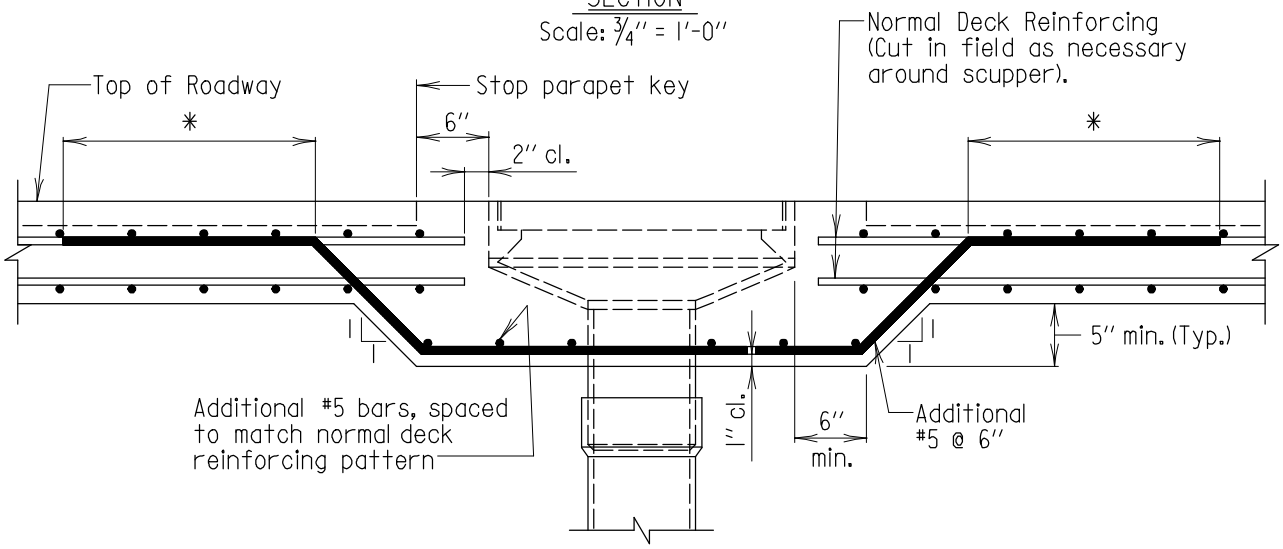

SECTION A-A

Scale: 3/4'' = 1'-0''

Notes:

1. Wood forms may be used in the area of the scupper as approved by the Engineer.
2. Type IA scupper shown.

APPROVAL	
E.S. Freedman DIRECTOR OFFICE OF STRUCTURES	
DATE: 10/22/03	
REVISIONS	
SHA	FHWA

FHWA APPROVAL	
DATE:	

STATE OF MARYLAND
DEPARTMENT OF TRANSPORTATION
STATE HIGHWAY ADMINISTRATION
OFFICE OF STRUCTURES

BRIDGE DECK REINFORCEMENT
PATTERN IN SCUPPER AREA FOR
SCUPPER TYPES I & IA AT F-SHAPE PARAPET
WITH STRAIGHT BACK

STANDARD NO. SUP-SC-301 SHEET 1 OF 1

SUPER-SCUPPERS

OLD NO. BR-SS(6.44)-03-346

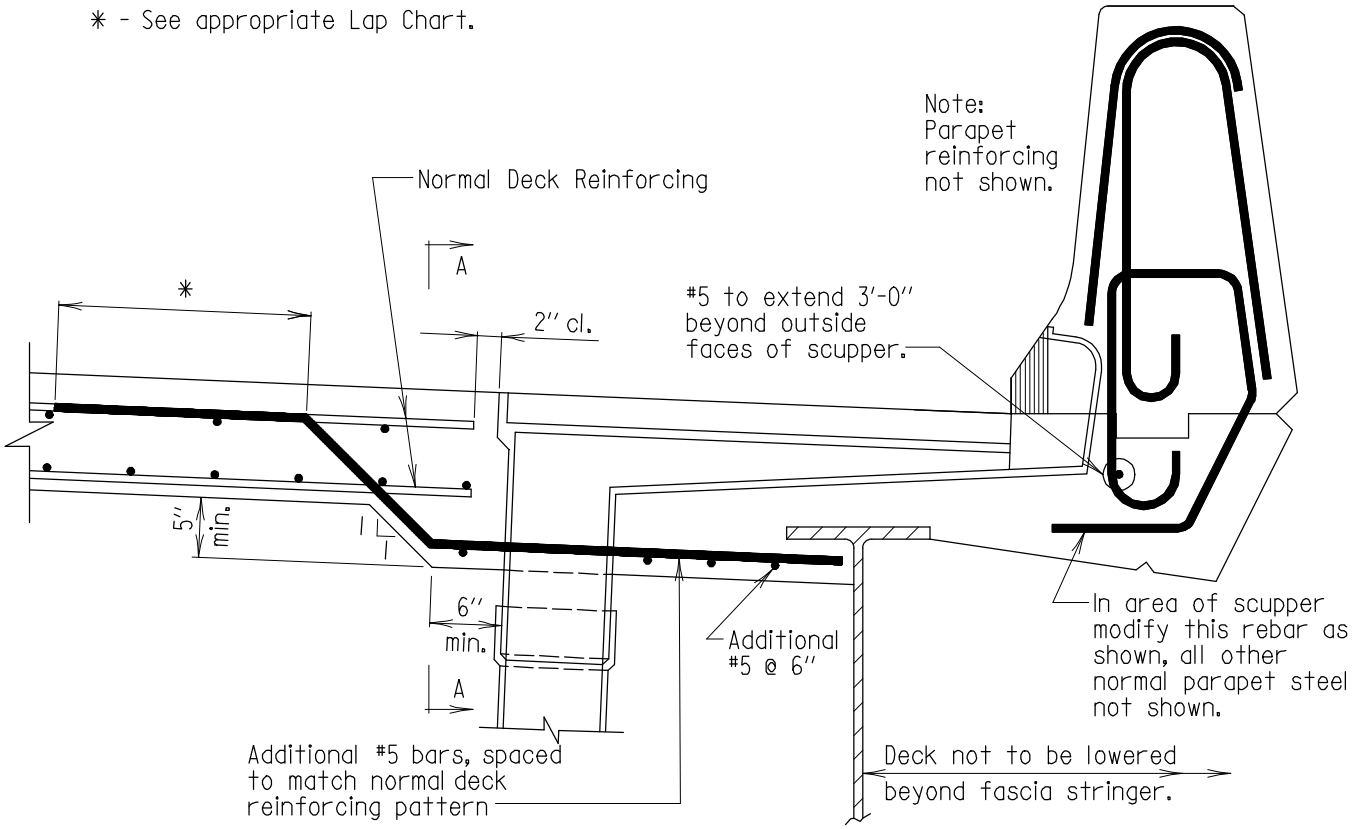

SECTION

Scale: 3/4'' = 1'-0''

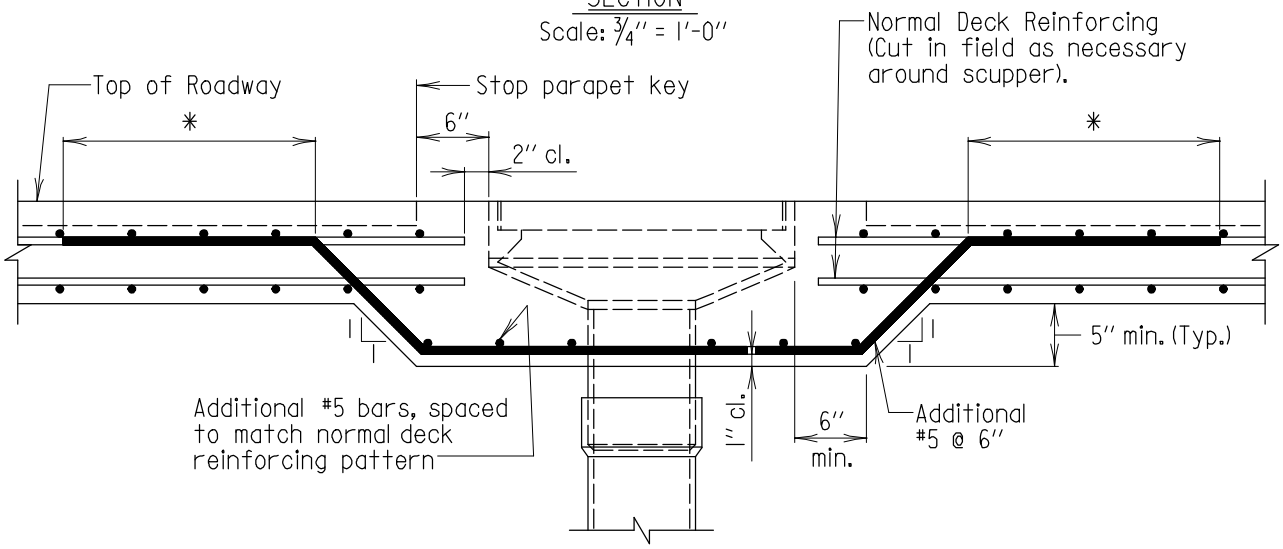

SECTION A-A

Scale: 3/4'' = 1'-0''

Notes:

1. Wood forms may be used in the area of the scupper as approved by the Engineer.
2. Type IA scupper shown.

APPROVAL	
E.S. Freedman DIRECTOR OFFICE OF STRUCTURES DATE: 10/22/03	
REVISIONS	
SHA	FHWA

FHWA APPROVAL	
DATE:	

STATE OF MARYLAND
DEPARTMENT OF TRANSPORTATION
STATE HIGHWAY ADMINISTRATION
OFFICE OF STRUCTURES

BRIDGE DECK REINFORCEMENT
PATTERN IN SCUPPER AREA FOR
SCUPPER TYPES I & IA AT F-SHAPE PARAPET
WITH DIAMOND BACK

STANDARD NO. SUP-SC-302 SHEET 1 OF 1

SUPER -SCUPPERS

OLD NO. BR-SS(6.45)-03-347

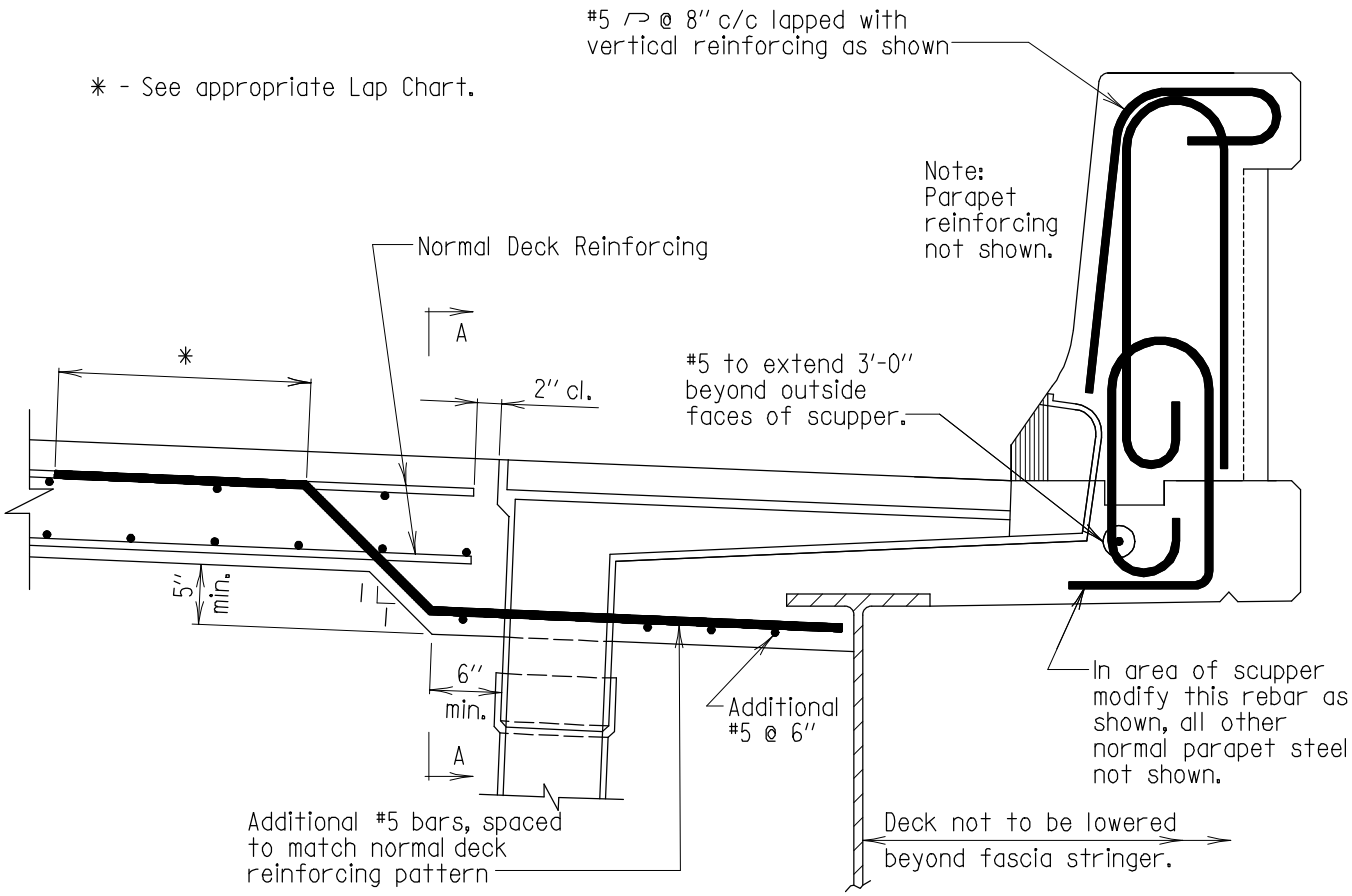

SECTION

Scale: 3/4" = 1'-0"

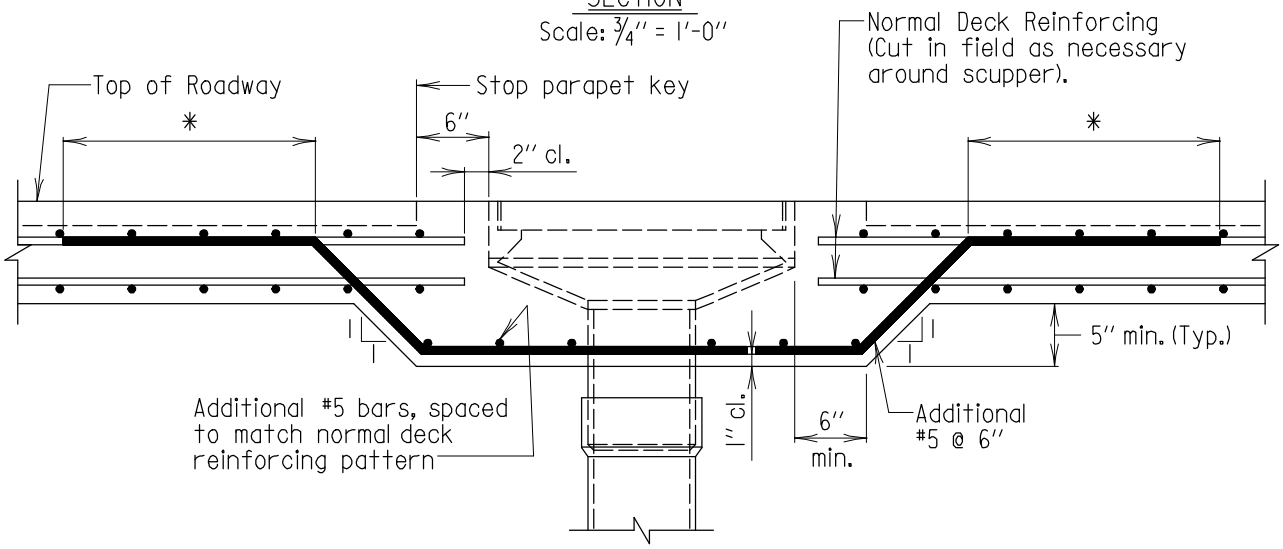

SECTION A-A

Scale: 3/4" = 1'-0"

Notes:

1. Wood forms may be used in the area of the scupper as approved by the Engineer.
2. Type IA scupper shown.

APPROVAL	
E.S. Freedman DIRECTOR OFFICE OF STRUCTURES	
DATE: 10/22/03	
REVISIONS	
SHA	FHWA

FHWA APPROVAL

DATE:

STATE OF MARYLAND
DEPARTMENT OF TRANSPORTATION
STATE HIGHWAY ADMINISTRATION
OFFICE OF STRUCTURES

BRIDGE DECK REINFORCEMENT PATTERN IN SCUPPER AREA FOR SCUPPER TYPES I & IA AT F-SHAPE PARAPET WITH ARCHITECTURAL FINISH

STANDARD NO. SUP-SC-303 SHEET 1 OF 1

SUPER - SCUPPERS

OLD NO. BR-SS(6.46)-03-348

✳ - See appropriate Lap Chart.

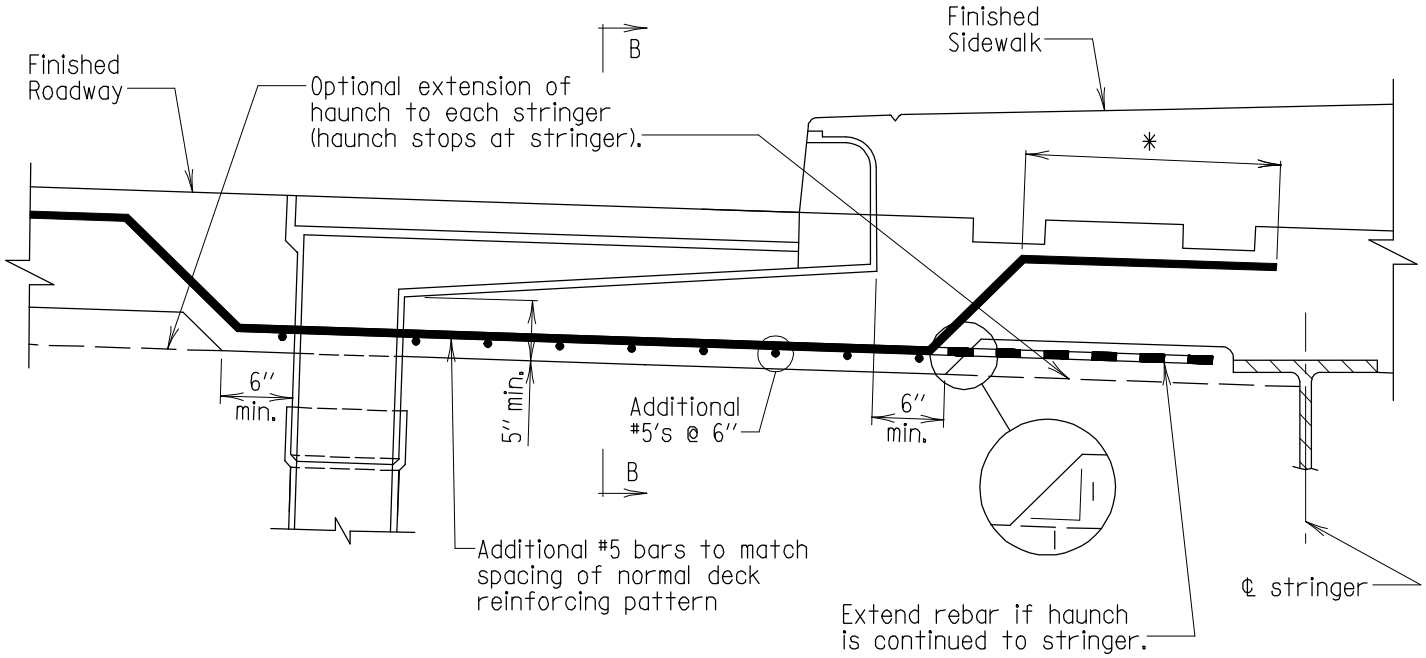

SECTION

Scale: 3/4'' = 1'-0''

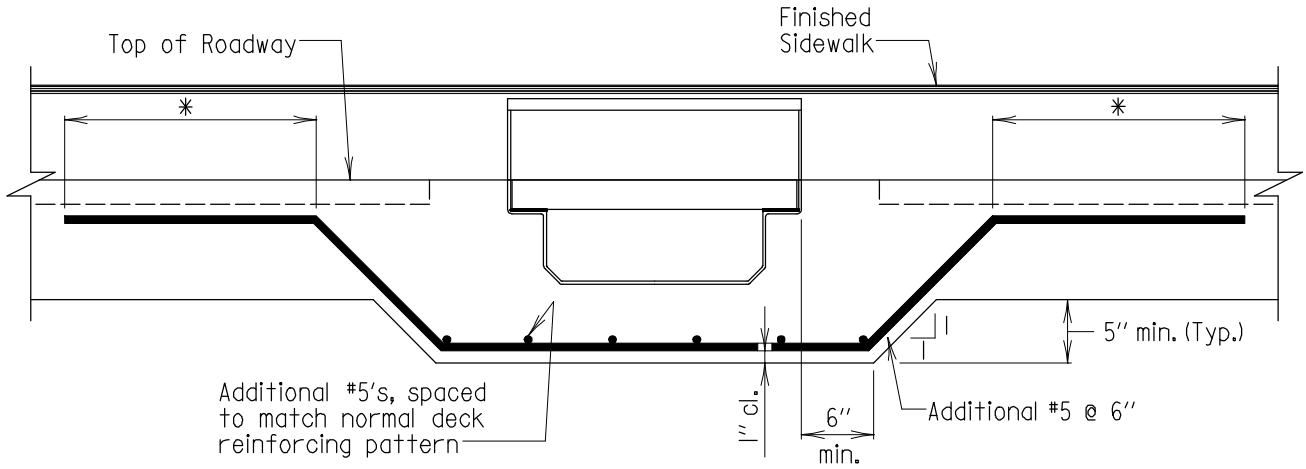

SECTION B-B

Scale: 3/4'' = 1'-0''

Notes:
1. Normal deck reinforcing not shown for clarity.
2. Wood forms may be used in the area of the scupper as approved by the Engineer.
3. Type I scupper shown.

APPROVAL	
E.S. Freedman DIRECTOR OFFICE OF STRUCTURES DATE: 8/7/98	
REVISIONS	
SHA	FHWA
10-22-03	
FHWA APPROVAL	
DATE:	

STATE OF MARYLAND
DEPARTMENT OF TRANSPORTATION
STATE HIGHWAY ADMINISTRATION
OFFICE OF STRUCTURES

BRIDGE DECK REINFORCEMENT PATTERN IN SCUPPER AREA FOR SCUPPER TYPES I, IA, IV AND V AT SIDEWALK

STANDARD NO. SUP-SC-304 SHEET 1 OF 1

SUPER-SCUPPERS

OLD NO. BR-SS(6.29)-85-171

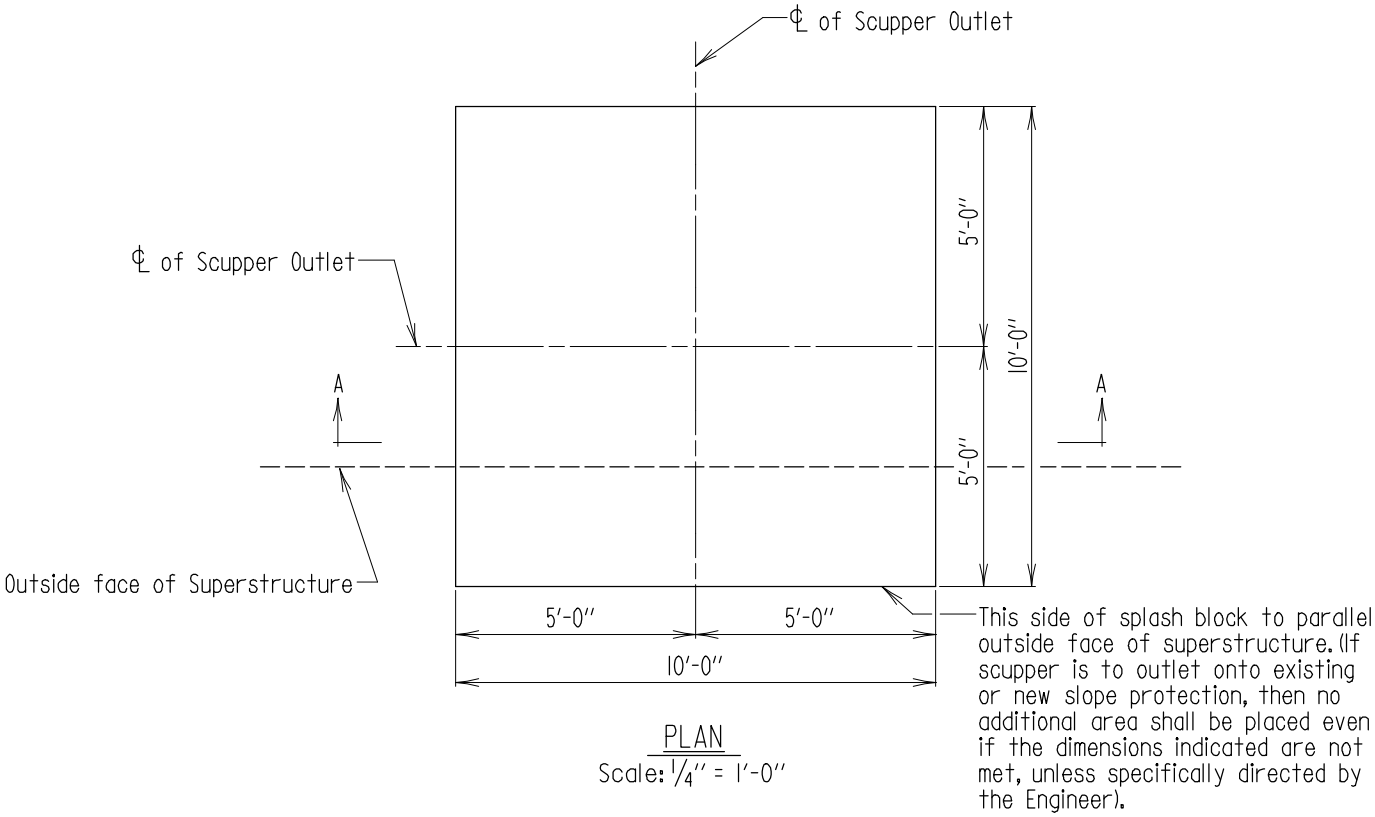

PLAN
Scale: 1/4" = 1'-0"

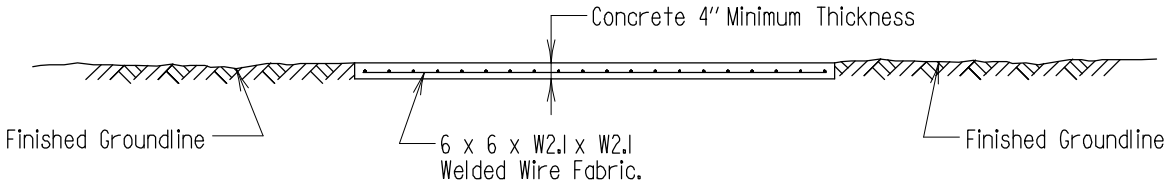

SECTION A-A
Scale: 1/4" = 1'-0"

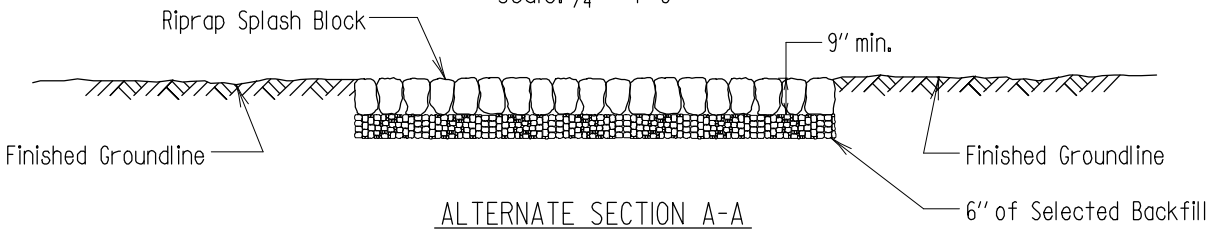

ALTERNATE SECTION A-A
Scale: 1/4" = 1'-0"

Note:
1. Splash blocks shall be placed at all scuppers that do not directly outlet onto slope protection or into water and are less than 40' above finished ground.
2. Concrete shall be Mix. No. 1 or better.
3. Cost of splash block(s) complete in place, regardless of alternate (including Selected Backfill) shall be measured and paid for at Contract unit price bid on Slope Protection item. If there is no slope protection in the project then cost to be included in Contract price bid on Scuppers or whichever item(s) scuppers are included in.
4. Alternate Section A-A is to be utilized when riprap slope protection is specified for slopes of bridge. All material for riprap for splash block shall conform to the same requirements for the other riprap slope protection for bridge.

APPROVAL		
R.S. Freedman DIRECTOR OFFICE OF STRUCTURES DATE: 11/14/80		
REVISIONS		
SHA	FHWA	
7-28-82	8-24-82	
5-6-83	11-29-85	
2-14-94		
1-22-01		

FHWA APPROVAL DATE: 8-20-81

STATE OF MARYLAND
DEPARTMENT OF TRANSPORTATION
STATE HIGHWAY ADMINISTRATION
OFFICE OF STRUCTURES

SPLASH BLOCKS FOR SCUPPER OUTLETS

STANDARD NO. SUP-SC-401 SHEET 1 OF 1

SUPER-SCUPPERS

OLD NO. M(6.04)-80-119